Spider
Gtv

VOLUME III

REPAIR INSTRUCTIONS

ELECTRIC SYSTEMS 55

ELECTRIC SYSTEM DIAGNOSIS 55

up to "April '97" cars

VARIANTS FOR Gtv 1996 TB

up to "April '97" cars

VARIANTS FOR Gtv 2959 24V

up to "April '97" cars

Alfa Romeo

PA497200000007

4-1997

UPDATE CARD

Spider
Gtv

VOLUME III

REPAIR
INSTRUCTIONS

UPDATE CARD				
UPDATE (DATE)	MODEL	SECTION	PAGE	
			SUBST.	ADDED
		VOLUME III		
7 (4/1997)	Spider-Gtv	-	Frontespice	
9 (9/1998)	Spider-Gtv		Index	
6 (9/1996)	Spider-Gtv	55	3	
6 (9/1996)	Spider-Gtv	55		5/1 to 5/6
6 (9/1996)	Spider-Gtv	55		10/1 to 10/6
9 (9/1998)	Spider-Gtv	55	12	
9 (9/1998)	Spider-Gtv	55		12/1 to 12/2
9 (9/1998)	Spider-Gtv	55	16	
9 (9/1998)	Spider-Gtv	55	21 to 22	
9 (9/1998)	Spider-Gtv	55		22/1 to 22/2
7 (4/1997)	Spider-Gtv	55	25	
8 (3/1998)	Spider-Gtv	55	26	
8 (3/1998)	Spider-Gtv	55		26/1
9 (9/1998)	Spider-Gtv	55	26/2	
9 (9/1998)	Spider-Gtv	55	27 to 30	
9 (9/1998)	Spider-Gtv	55		30/1 to 30/2
9 (9/1998)	Spider-Gtv	55	31	
8 (3/1998)	Spider-Gtv	55	34 to 35	
7 (4/1997)	Spider-Gtv	55	37	
8 (3/1998)	Spider-Gtv	55	38 to 39	
9 (9/1998)	Spider-Gtv	55	40 to 44	
9 (9/1998)	Spider-Gtv	55		45 to 46
6 (9/1996)	Spider-Gtv	55	Index I	
6 (9/1996)	Spider-Gtv	55	Index II	
5 (12/1995)	Spider-Gtv	55-I	9	
3 (3/1995)	Spider-Gtv	55-1	2	
6 (9/1996)	Spider-Gtv	55-1	4	
5 (12/1995)	Spider-Gtv	55-1	6	
6 (9/1996)	Spider-Gtv	55-2	3	
6 (9/1996)	Spider-Gtv	55-2	5	
5 (12/1995)	Spider-Gtv	55-2	6 to 7	
5 (12/1995)	Spider-Gtv	55-2	9	
5 (12/1995)	Spider-Gtv	55-3	2	
6 (9/1996)	Spider-Gtv	55-3	3	
6 (9/1996)	Spider-Gtv	55-3	5 to 6	
5 (12/1995)	Spider-Gtv	55-3	7 to 9	
5 (12/1995)	Spider-Gtv	55-3	11	
6 (9/1996)	Spider-Gtv	55-3	14	
5 (12/1995)	Spider-Gtv	55-3	15	
5 (12/1995)	Spider-Gtv	55-3		16
3 (3/1995)	Spider-Gtv	55-4	4	
5 (12/1995)	Spider-Gtv	55-8	2	
5 (12/1995)	Spider-Gtv	55-8	5	
5 (12/1995)	Spider-Gtv	55-13	6 to 7	
5 (12/1995)	Spider-Gtv	55-13	12 to 13	
5 (12/1995)	Spider-Gtv	55-14	2 to 3	
5 (12/1995)	Spider-Gtv	55-14	6 to 8	
5 (12/1995)	Spider-Gtv	55-15	2	
5 (12/1995)	Spider-Gtv	55-15	4	
6 (9/1996)	Spider-Gtv	55-16	1	
5 (12/1995)	Spider-Gtv	55-16	8	
5 (12/1995)	Spider-Gtv	55-16	10	
5 (12/1995)	Spider-Gtv	55-18	2	
5 (12/1995)	Spider-Gtv	55-18		2/1 to 2/2
5 (12/1995)	Spider-Gtv	55-18	3	
5 (12/1995)	Spider-Gtv	55-18A	1 to 9	
5 (12/1995)	Spider-Gtv	55-18A		10 to 17
10 (11/1999)	Spider-Gtv	55-20	1 to 4	
6 (9/1996)	Spider-Gtv	55-23	1	
8 (3/1998)	Spider-Gtv	55-23	2 to 9	
8 (3/1998)	Spider-Gtv	55-23		10 to 12 ANNULLED
6 (9/1996)	Spider-Gtv	55-23	13 to 20	
6 (9/1996)	Spider-Gtv	55-26	3	
6 (9/1996)	Spider-Gtv	55-26	6 to 7	
6 (9/1996)	Spider-Gtv	55-26		7/1 to 7/2
6 (9/1996)	Spider-Gtv	55-26	8	
6 (9/1996)	Spider-Gtv	55-26	10	
6 (9/1996)	Spider-Gtv	55-26		10/1 to 10/4
6 (9/1996)	Spider-Gtv	55-26	11 to 13	
6 (9/1996)	Spider-Gtv	55-26	15 to 17	
6 (9/1996)	Spider-Gtv	55-27	2	
6 (9/1996)	Spider-Gtv	55-27		2/1 to 2/2
6 (9/1996)	Spider-Gtv	55-27	3 to 4	
3 (3/1995)	Spider-Gtv	55-28	1 to 2	
6 (9/1996)	Spider-Gtv	55-28	7 to 8	
3 (3/1995)	Spider-Gtv	55-28	15	
6 (9/1996)	Spider-Gtv	55-28	16	
6 (9/1996)	Spider-Gtv	55-28		16/1 to 16/2
6 (9/1996)	Spider-Gtv	55-28	17	
5 (12/1995)	Spider-Gtv	55-28	18	
6 (9/1996)	Spider-Gtv	55-29	1	
5 (3/1995)	Spider-Gtv	55-29	2 to 4	
5 (12/1995)	Spider-Gtv	55-29	7	
3 (3/1995)	Spider-Gtv	55-29	8	
5 (12/1995)	Spider-Gtv	55-29	11	
5 (12/1995)	Spider-Gtv	55-29	17a 18	
6 (9/1996)	Spider-Gtv	55-29A		1 to 18
3 (3/1995)	Spider-Gtv	55-30	1	
5 (12/1995)	Spider-Gtv	55-30	2 to 3	
5 (12/1995)	Spider-Gtv	55-30	7	
5 (12/1995)	Spider-Gtv	55-30	11	
3 (3/1995)	Spider-Gtv	55-30	17	
5 (12/1995)	Spider-Gtv	55-30	18	
5 (12/1995)	Spider-Gtv	55-A1	2 to 4	
6 (9/1996)	Spider-Gtv	55-A2	2	
5 (12/1995)	Spider-Gtv	55-A2	3	
5 (12/1995)	Spider-Gtv	55-A2	6	
5 (12/1995)	Spider-Gtv	55-A2		6/1
5 (12/1995)	Spider-Gtv	55-A2	7	
5 (12/1995)	Spider-Gtv	55-A2	10	
6 (9/1996)	Spider-Gtv	55-A2	11	
5 (12/1995)	Spider-Gtv	55-A2	12 to 16	
5 (12/1995)	Spider-Gtv	55-A2	19	
6 (9/1996)	Spider-Gtv	55-A2	21 to 23	
5 (12/1995)	Spider-Gtv	55-A2	24	
6 (9/1996)	Spider-Gtv	55-A2	26 to 28	

(continued)

UPDATE CARD

(continued)

UPDATE CARD				
UPDATE (DATE)	MODEL	SECTION	PAGE	
			SUBST.	ADDED
6 (9/1996)	Spider-Gtv	55-A2		28/1 to 28/2
6 (9/1996)	Spider-Gtv	55-A2	29 to 30	
5 (12/1995)	Spider-Gtv	55-A2	31	
6 (9/1996)	Spider-Gtv	55-A2	32 to 33	
5 (12/1995)	Spider-Gtv	55-A2		33/1 to 33/4
5 (12/1995)	Spider-Gtv	55-A2	34 to 35	
6 (9/1996)	Spider-Gtv	55-A2	36	
6 (9/1996)	Spider-Gtv	55-A2		36/1 to 36/4
5 (12/1995)	Spider-Gtv	55-A2	37	
6 (9/1996)	Spider-Gtv	55-A2	39	
5 (12/1995)	Spider-Gtv	55-A2	40	
5 (12/1995)	Spider-Gtv	55-A2		40/1 to 40/2
5 (12/1995)	Spider-Gtv	55-A2	41 to 43	
6 (9/1996)	Spider-Gtv	55-A2	44	
6 (9/1996)	Spider-Gtv	55-A2		44/1 to 44/2
5 (12/1995)	Spider-Gtv	55-A2	47	
6 (9/1996)	Spider-Gtv	55-A2	48	
6 (9/1996)	Spider-Gtv	55-A2		48/1 to 48/2
6 (9/1996)	Spider-Gtv	55-A2	49 to 54	
6 (9/1996)	Spider-Gtv	55-A2		54/1 to 54/2
6 (9/1996)	Spider-Gtv	55-A2	55 to 60	
(3/1995)	Gtv V6 TB	-	Index	
3 (3/1995)	Gtv V6 TB	55		1 to 8
3 (3/1995)	Gtv V6 TB	55-2		1 to 4
3 (3/1995)	Gtv V6 TB	55-3	1 to 2	
5 (12/1995)	Gtv V6 TB	55-3	3	
3 (3/1995)	Gtv V6 TB	55-3		4
3 (3/1995)	Gtv V6 TB	55-13	1	
3 (3/1995)	Gtv V6 TB	55-13		2 to 3
3 (3/1995)	Gtv V6 TB	55-13		4 to 5
3 (3/1995)	Gtv V6 TB	55-26	1	
5 (12/1995)	Gtv V6 TB	55-26	2 to 3	
3 (3/1995)	Gtv V6 TB	55-28	1	
3 (3/1995)	Gtv V6 TB	55-28		2 to 3
3 (3/1995)	Gtv V6 TB	55-30	1	
5 (12/1995)	Gtv V6 TB	55-30	2 to 4	
3 (3/1995)	Gtv V6 TB	55-30	5 to 6	
5 (12/1995)	Gtv V6 TB	55-30	7	
3 (3/1995)	Gtv V6 TB	55-30	8 to 10	
5 (12/1995)	Gtv V6 TB	55-30	11	
5 (12/1995)	Gtv V6 TB	55-30		12 to 16
5 (12/1995)	Gtv V6 TB	55-30	17	
3 (3/1995)	Gtv V6 TB	55-A1		1
3 (3/1995)	Gtv V6 TB	55-A1	2 to 3	
3 (3/1995)	Gtv V6 TB	55-A1		4
3 (3/1995)	Gtv V6 TB	55-A1		1
5 (12/1995)	Gtv V6 TB	55-A2	2 to 3	
3 (3/1995)	Gtv V6 TB	55-A2		4 to 9
6 (9/1996)	Gtv 3.0V6	-		Index
6 (9/1996)	Gtv 3.0V6	55		1 to 13
6 (9/1996)	Gtv 3.0V6	55-1		1 to 3
6 (9/1996)	Gtv 3.0V6	55-2		1 to 4
6 (9/1996)	Gtv 3.0V6	55-3		1 to 6

UPDATE CARD				
UPDATE (DATE)	MODEL	SECTION	PAGE	
			SUBST.	ADDED
6 (9/1996)	Gtv 3.0V6	55-10		1 to 3
6 (9/1996)	Gtv 3.0V6	55-13		1 to 5
6 (9/1996)	Gtv 3.0V6	55-26		1 to 12
6 (9/1996)	Gtv 3.0V6	55-27		1 to 4
6 (9/1996)	Gtv 3.0V6	55-28		1 to 3
6 (9/1996)	Gtv 3.0V6	55-30		1 to 17
6 (9/1996)	Gtv 3.0V6	55-A1		1 to 4
6 (9/1996)	Gtv 3.0V6	55-A2		1 to 12
		VOLUME III SECTION II		
8 (3/1998)	Spider-Gtv	-		Frontespice
7 (4/1997)	Spider-Gtv '97	-		Index
7 (4/1997)	Spider-Gtv '97	55-1		1 to 6
7 (4/1997)	Spider-Gtv '97	55-2		1 to 13
7 (4/1997)	Spider-Gtv '97	55-3		1 to 15
7 (4/1997)	Spider-Gtv '97	55-4		1 to 5
7 (4/1997)	Spider-Gtv '97	55-5		1 to 4
7 (4/1997)	Spider-Gtv '97	55-6		1 to 5
7 (4/1997)	Spider-Gtv '97	55-7		1 to 6
7 (4/1997)	Spider-Gtv '97	55-8		1 to 6
7 (4/1997)	Spider-Gtv '97	55-9		1 to 6
7 (4/1997)	Spider-Gtv '97	55-10		1 to 4
7 (4/1997)	Spider-Gtv '97	55-11		1 to 5
7 (4/1997)	Spider-Gtv '97	55-12		1 to 7
7 (4/1997)	Spider-Gtv '97	55-13		1 to 16
7 (4/1997)	Spider-Gtv '97	55-14		1 to 8
7 (4/1997)	Spider-Gtv '97	55-15		1 to 6
7 (4/1997)	Spider-Gtv '97	55-17		1 to 5
7 (4/1997)	Spider-Gtv '97	55-18		1 to 6
7 (4/1997)	Spider-Gtv '97	55-18A		1 to 17
7 (4/1997)	Spider-Gtv '97	55-19		1 to 6
10 (11/1999)	Spider-Gtv'97	55-20	1 to 4	
7 (4/1997)	Spider-Gtv '97	55-20		5 to 8
7 (4/1997)	Spider-Gtv '97	55-21		1 to 5
8 (3/1998)	Spider-Gtv '97	55-23	1 to 12	
8 (3/1998)	Spider-Gtv '97	55-23		13 to 16 ANNULLED
7 (4/1997)	Spider-Gtv '97	55-24		1 to 4
7 (4/1997)	Spider-Gtv '97	55-25		1 to 6
7 (4/1997)	Spider-Gtv '97	55-26		1 to 28
7 (4/1997)	Spider-Gtv '97	55-27		1 to 8
7 (4/1997)	Spider-Gtv '97	55-28		1 to 24
7 (4/1997)	Spider-Gtv '97	55-29A		1 to 17
7 (4/1997)	Spider-Gtv '97	55-29B		1 to 18
7 (4/1997)	Spider-Gtv '97	55-29C		1 to 17
7 (4/1997)	Spider-Gtv '97	55-29D		1 to 18
7 (4/1997)	Spider-Gtv '97	55-31		1 to 11
7 (4/1997)	Spider-Gtv '97	55-A1		1 to 4
7 (4/1997)	Spider-Gtv '97	55-A2		1 to 78

(continued)

UPDATE CARD

Spider
Gtv
VOLUME III
REPAIR
INSTRUCTIONS

(continued)

UPDATE CARD

UPDATE (DATE)	MODEL	SECTION	PAGE	
			SUBST.	ADDED
11 (7/2000)	**Spider-Gtv '98**		**Index**	
9 (9/1998)	Spider-Gtv '98	55-1		1
11 (7/2000)	**Spider-Gtv '98**	**55-1**	**2**	
9 (9/1998)	Spider-Gtv '98	55-1		3
10 (11/1999)	Spider-Gtv '98	55-1	4	
10 (11/1999)	Spider-Gtv '98	55-1		4/1
11 (7/2000)	**Spider-Gtv '98**	**55-1**	**4/2**	
11 (7/2000)	**Spider-Gtv '98**	**55-1**	**5 to 6**	
9 (9/1998)	Spider-Gtv '98	55-2		1 to 3
11 (7/2000)	**Spider-Gtv '98**	**55-2**	**4**	
11 (7/2000)	**Spider-Gtv '98**	**55-2**	**4/1**	
10 (11/1999)	Spider-Gtv '98	55-2		4/2
10 (11/1999)	Spider-Gtv '98	55-2	5 to 6	
10 (11/1999)	Spider-Gtv '98	55-2		6/1 to 6/2
9 (9/1998)	Spider-Gtv '98	55-2		7 to 8
11 (7/2000)	**Spider-Gtv '98**	**55-2**	**9**	
9 (9/1998)	Spider-Gtv '98	55-2		10
10 (11/1999)	Spider-Gtv '98	55-2	11	
9 (9/1998)	Spider-Gtv '98	55-2		12
9 (9/1998)	Spider-Gtv '98	55-3		1 to 2
10 (11/1999)	Spider-Gtv '98	55-3	3 to 4	
10 (11/1999)	Spider-Gtv '98	55-3		4/1 to 4/2
11 (7/2000)	**Spider-Gtv '98**	**55-3**	**5 to 7**	
10 (11/1999)	Spider-Gtv '98	55-3	8	
11 (7/2000)	**Spider-Gtv '98**	**55-3**	**9**	
9 (9/1998)	Spider-Gtv '98	55-3		10 to 12
11 (7/2000)	**Spider-Gtv '98**	**55-3**	**13 to 14**	
11 (7/2000)	**Spider-Gtv '98**	**55-3**		**15 to 16**
11 (7/2000)	**Spider-Gtv '98**	**55-4**	**1 to 5**	
11 (7/2000)	**Spider-Gtv '98**	**55-4**		**6**
10 (11/1999)	Spider-Gtv '98	55-5	1	
9 (9/1998)	Spider-Gtv '98	55-5		2
10 (11/1999)	Spider-Gtv '98	55-5	3 to 4	
10 (11/1999)	Spider-Gtv '98	55-5		5 to 6
10 (11/1999)	Spider-Gtv '98	55-6	1	
9 (9/1998)	Spider-Gtv '98	55-6		2
10 (11/1999)	Spider-Gtv '98	55-6	3 to 5	
10 (11/1999)	Spider-Gtv '98	55-6		6
10 (11/1999)	Spider-Gtv '98	55-7	1	
9 (9/1998)	Spider-Gtv '98	55-7		2
11 (7/2000)	**Spider-Gtv '98**	**55-7**	**3 to 6**	
10 (11/1999)	Spider-Gtv '98	55-7		7 to 8
10 (11/1999)	Spider-Gtv '98	55-8	1	
9 (9/1998)	Spider-Gtv '98	55-8		2
11 (7/2000)	**Spider-Gtv '98**	**55-8**	**3 to 6**	
10 (11/1999)	Spider-Gtv '98	55-8		7 to 8
10 (11/1999)	Spider-Gtv '98	55-9	1	
9 (9/1998)	Spider-Gtv '98	55-9		2
10 (11/1999)	Spider-Gtv '98	55-9	3 to 6	
10 (11/1999)	Spider-Gtv '98	55-9		7 to 8
11 (7/2000)	**Spider-Gtv '98**	**55-10**	**1**	
10 (11/1999)	Spider-Gtv '98	55-10	2	
11 (7/2000)	**Spider-Gtv '98**	**55-10**	**3 to 4**	
11 (7/2000)	**Spider-Gtv '98**	**55-10**		**5 to 6**
9 (9/1998)	Spider-Gtv '98	55-10		3
9 (9/1998)	Spider-Gtv '98	55-11		1
10 (11/1999)	Spider-Gtv '98	55-11	2	
9 (9/1998)	Spider-Gtv '98	55-11		3 to 5
9 (9/1998)	Spider-Gtv '98	55-12		1
10 (11/1999)	Spider-Gtv '98	55-12	2 to 4	
9 (9/1998)	Spider-Gtv '98	55-12		5 to 7
11 (7/2000)	**Spider-Gtv '98**	**55-13**	**1 to 2**	
9 (9/1998)	Spider-Gtv '98	55-13	3	
11 (7/2000)	**Spider-Gtv '98**	**55-13**	**4 to 14**	
11 (7/2000)	**Spider-Gtv '98**	**55-13**		**15 to 18**
11 (7/2000)	**Spider-Gtv '98**	**55-14**	**1 to 4**	
11 (7/2000)	**Spider-Gtv '98**	**55-14**	**4/1 to 4/2**	
11 (7/2000)	**Spider-Gtv '98**	**55-14**	**5 to 6**	
9 (9/1998)	Spider-Gtv '98	55-14		7 to 8
10 (11/1999)	Spider-Gtv '98	55-15	1	
9 (9/1998)	Spider-Gtv '98	55-15		2
11 (7/2000)	**Spider-Gtv '98**	**55-15**	**3 to 6**	
10 (11/1999)	Spider-Gtv '98	55-15		7 to 8
11 (7/2000)	**Spider-Gtv '98**	**55-16**		**1 to 6**
10 (11/1999)	Spider-Gtv '98	55-17	1	
9 (9/1998)	Spider-Gtv '98	55-17		2
11 (7/2000)	**Spider-Gtv '98**	**55-17**	**3**	
10 (11/1999)	Spider-Gtv '98	55-17	4	
11 (7/2000)	**Spider-Gtv '98**	**55-17**	**5**	
10 (11/1999)	Spider-Gtv '98	55-17		6
9 (9/1998)	Spider-Gtv '98	55-18		1
10 (11/1999)	Spider-Gtv '98	55-18	2 to 4	
9 (9/1998)	Spider-Gtv '98	55-18		5 to 6
9 (9/1998)	Spider-Gtv '98	55-18A		1 to 7
10 (11/1999)	Spider-Gtv '98	55-18A	8	
9 (9/1998)	Spider-Gtv '98	55-18A		9
10 (11/1999)	Spider-Gtv '98	55-18A	10 to 16	
9 (9/1998)	Spider-Gtv '98	55-18A		17
11 (7/2000)	**Spider-Gtv '98**	**55-19**	**1**	
9 (9/1998)	Spider-Gtv '98	55-19		2
10 (11/1999)	Spider-Gtv '98	55-19	3	
11 (7/2000)	**Spider-Gtv '98**	**55-19**	**4 to 7**	
11 (7/2000)	**Spider-Gtv '98**	**55-19**		**8 to 10**
10 (11/1999)	Spider-Gtv '98	55-20	1 to 2	
11 (7/2000)	**Spider-Gtv '98**	**55-20**	**3 to 6**	
10 (11/1999)	Spider-Gtv '98	55-20		9 to 10
10 (11/1999)	Spider-Gtv '98	55-21	1	
9 (9/1998)	Spider-Gtv '98	55-21		2
10 (11/1999)	Spider-Gtv '98	55-21	3 to 5	
10 (11/1999)	Spider-Gtv '98	55-21		6
10 (11/1999)	Spider-Gtv '98	55-22	1 to 4	
9 (9/1998)	Spider-Gtv '98	55-22A		1
10 (11/1999)	Spider-Gtv '98	55-22A	2 to 4	
11 (7/2000)	**Spider-Gtv '98**	**55-22B**	**1 to 4**	
11 (7/2000)	**Spider-Gtv '98**	**55-22B**		**5 to 6**
9 (9/1998)	Spider-Gtv '98	55-23	1	
8 (3/1998)	Spider-Gtv '98	55-23		2 to 6
9 (9/1998)	Spider-Gtv '98	55-23	7	
11 (7/2000)	**Spider-Gtv '98**	**55-23**	**8 to 9**	
9 (9/1998)	Spider-Gtv '98	55-23	10	

UPDATE CARD

Spider
Gtv
VOLUME III
REPAIR
INSTRUCTIONS

(continued)

UPDATE CARD

UPDATE (DATE)	MODEL	SECTION	PAGE	
			SUBST.	ADDED
9 (9/1998)	Spider-Gtv '98	55-23		11
9 (9/1998)	Spider-Gtv '98	55-24		1
10 (11/1999)	Spider-Gtv '98	55-24	2	
9 (9/1998)	Spider-Gtv '98	55-24		3 to 4
11 (7/2000)	**Spider-Gtv '98**	**55-26**	**1 to 2**	
9 (9/1998)	Spider-Gtv '98	55-26	3	
9 (9/1998)	Spider-Gtv '98	55-26		4
10 (11/1999)	Spider-Gtv '98	55-26		4/1
11 (7/2000)	**Spider-Gtv '98**	**55-26**	**4/2**	
11 (7/2000)	**Spider-Gtv '98**	**55-26**		**4/3 to 4/4**
11 (7/2000)	**Spider-Gtv '98**	**55-26**	**5 to 6**	
11 (7/2000)	**Spider-Gtv '98**	**55-26**	**6/1 to 6/2**	
11 (7/2000)	**Spider-Gtv '98**	**55-26**	**7 to 8**	
9 (9/1998)	Spider-Gtv '98	55-26		9
10 (11/1999)	Spider-Gtv '98	55-26	10	
11 (7/2000)	**Spider-Gtv '98**	**55-26**	**10/1 to 10/2**	
11 (7/2000)	**Spider-Gtv '98**	**55-26**		**10/3 to 10/4**
11 (7/2000)	**Spider-Gtv '98**	**55-26**	**11 to 12**	
11 (7/2000)	**Spider-Gtv '98**	**55-26**	**12/1 to 12/2**	
11 (7/2000)	**Spider-Gtv '98**	**55-26**	**13 to 14**	
11 (7/2000)	**Spider-Gtv '98**	**55-26**		**14/1 to 14/2**
11 (7/2000)	**Spider-Gtv '98**	**55-26**	**15**	
10 (11/1999)	Spider-Gtv '98	55-26	16 to 18	
10 (11/1999)	Spider-Gtv '98	55-27		1 to 4
9 (9/1998)	Spider-Gtv '98	55-28		1 to 2
10 (11/1999)	Spider-Gtv '98	55-28	3	
9 (9/1998)	Spider-Gtv '98	55-28		4
11 (7/2000)	**Spider-Gtv '98**	**55-28**	**5**	
10 (11/1999)	Spider-Gtv '98	55-28	6 to 7	
11 (7/2000)	**Spider-Gtv '98**	**55-28**	**8**	
11 (7/2000)	**Spider-Gtv '98**	**55-28**		**8/1 to 8/2**
11 (7/2000)	**Spider-Gtv '98**	**55-28**	**9**	
9 (9/1998)	Spider-Gtv '98	55-28		10 to 11
11 (7/2000)	**Spider-Gtv '98**	**55-28**	**12**	
9 (9/1998)	Spider-Gtv '98	55-29A	1	
10 (11/1999)	Spider-Gtv '98	55-29A	2 to 3	
8 (3/1998)	Spider-Gtv '98	55-29A		4 to 5
10 (11/1999)	Spider-Gtv '98	55-29A	6	
9 (9/1998)	Spider-Gtv '98	55-29A	7	
10 (11/1999)	Spider-Gtv '98	55-29A	8	
9 (9/1998)	Spider-Gtv '98	55-29B		1
10 (11/1999)	Spider-Gtv '98	55-29B	2 to 3	
9 (9/1998)	Spider-Gtv '98	55-29B		4 to 6
10 (11/1999)	Spider-Gtv '98	55-29B	7 to 8	
9 (9/1998)	Spider-Gtv '98	55-29C		1
10 (11/1999)	Spider-Gtv '98	55-29C	2 to 4	
9 (9/1998)	Spider-Gtv '98	55-29C		5 to 8
10 (11/1999)	Spider-Gtv '98	55-29C	9 to 10	
9 (9/1998)	Spider-Gtv '98	55-29D	1	
10 (11/1999)	Spider-Gtv '98	55-29D	2 to 3	
8 (3/1998)	Spider-Gtv '98	55-29D		4 to 5
9 (9/1998)	Spider-Gtv '98	55-29D	6	
10 (11/1999)	Spider-Gtv '98	55-29D	7 to 8	
11 (7/2000)	**Spider-Gtv '98**	**55-29E**		**1 to 10**
11 (7/2000)	**Spider-Gtv '98**	**55-29F**		**1 to 10**
11 (7/2000)	**Spider-Gtv '98**	**55-31**	**1 to 6**	
9 (3/1998)	Spider-Gtv '98	55-32	1	
11 (7/2000)	**Spider-Gtv '98**	**55-32**	**2**	
9 (3/1998)	Spider-Gtv '98	55-32	3	
11 (7/2000)	**Spider-Gtv '98**	**55-32**	**4**	
11 (7/2000)	**Spider-Gtv '98**	**55-A1**	**1**	
9 (9/1998)	Spider-Gtv '98	55-A1		1 to 2
10 (11/1999)	Spider-Gtv '98	55-A1	3 to 4	
11 (7/2000)	**Spider-Gtv '98**	**55-A2**	**1**	
10 (11/1999)	Spider-Gtv '98	55-A2	1 to 83	
10 (11/1999)	Spider-Gtv '98	55-A2		84 to 94
11 (7/2000)	**Spider-Gtv 2000**	**55-A1b**		**1 to 4**
11 (7/2000)	**Spider-Gtv 2000**	**55-A2b**		**1 to 68**

UPDATE CARD

Spider
Gtv
VOLUME III
REPAIR
INSTRUCTIONS

UPDATE CARD				
UPDATE (DATE)	MODEL	SECTION	PAGE	
			SUBST.	ADDED
		VOLUME III		
7 (4/1997)	Spider-Gtv	-	Frontespice	
9 (9/1998)	Spider-Gtv		Index	
6 (9/1996)	Spider-Gtv	55	3	
6 (9/1996)	Spider-Gtv	55		5/1 to 5/6
6 (9/1996)	Spider-Gtv	55		10/1 to 10/6
9 (9/1998)	Spider-Gtv	55	12	
9 (9/1998)	Spider-Gtv	55		12/1 to 12/2
9 (9/1998)	Spider-Gtv	55	16	
9 (9/1998)	Spider-Gtv	55	21 to 22	
9 (9/1998)	Spider-Gtv	55		22/1 to 22/2
7 (4/1997)	Spider-Gtv	55	25	
8 (3/1998)	Spider-Gtv	55	26	
8 (3/1998)	Spider-Gtv	55		26/1
9 (9/1998)	Spider-Gtv	55	26/2	
9 (9/1998)	Spider-Gtv	55	27 to 30	
9 (9/1998)	Spider-Gtv	55		30/1 to 30/2
9 (9/1998)	Spider-Gtv	55	31	
8 (3/1998)	Spider-Gtv	55	34 to 35	
7 (4/1997)	Spider-Gtv	55	37	
8 (3/1998)	Spider-Gtv	55	38 to 39	
9 (9/1998)	Spider-Gtv	55	40 to 44	
9 (9/1998)	Spider-Gtv	55		45 to 46
6 (9/1996)	Spider-Gtv	55	Index I	
6 (9/1996)	Spider-Gtv	55	Index II	
5 (12/1995)	Spider-Gtv	55-I	9	
3 (3/1995)	Spider-Gtv	55-1	2	
6 (9/1996)	Spider-Gtv	55-1	4	
5 (12/1995)	Spider-Gtv	55-1	6	
6 (9/1996)	Spider-Gtv	55-2	3	
6 (9/1996)	Spider-Gtv	55-2	5	
5 (12/1995)	Spider-Gtv	55-2	6 to 7	
5 (12/1995)	Spider-Gtv	55-2	9	
5 (12/1995)	Spider-Gtv	55-3	2	
6 (9/1996)	Spider-Gtv	55-3	3	
6 (9/1996)	Spider-Gtv	55-3	5 to 6	
5 (12/1995)	Spider-Gtv	55-3	7 to 9	
5 (12/1995)	Spider-Gtv	55-3	11	
6 (9/1996)	Spider-Gtv	55-3	14	
5 (12/1995)	Spider-Gtv	55-3	15	
5 (12/1995)	Spider-Gtv	55-3		16
3 (3/1995)	Spider-Gtv	55-4	4	
5 (12/1995)	Spider-Gtv	55-8	2	
5 (12/1995)	Spider-Gtv	55-8	5	
5 (12/1995)	Spider-Gtv	55-13	6 to 7	
5 (12/1995)	Spider-Gtv	55-13	12 to 13	
5 (12/1995)	Spider-Gtv	55-14	2 to 3	
5 (12/1995)	Spider-Gtv	55-14	6 to 8	
5 (12/1995)	Spider-Gtv	55-15	2	
5 (12/1995)	Spider-Gtv	55-15	4	
6 (9/1996)	Spider-Gtv	55-16	1	
5 (12/1995)	Spider-Gtv	55-16	8	
5 (12/1995)	Spider-Gtv	55-16	10	
5 (12/1995)	Spider-Gtv	55-18	2	
5 (12/1995)	Spider-Gtv	55-18		2/1 to 2/2
5 (12/1995)	Spider-Gtv	55-18	3	
5 (12/1995)	Spider-Gtv	55-18A	1 to 9	
5 (12/1995)	Spider-Gtv	55-18A		10 to 17
10 (11/1999)	**Spider-Gtv**	**55-20**	**1 to 4**	
6 (9/1996)	Spider-Gtv	55-23	1	
8 (3/1998)	Spider-Gtv	55-23	2 to 9	
8 (3/1998)	Spider-Gtv	55-23		10 to 12 ANNULLED
6 (9/1996)	Spider-Gtv	55-23	13 to 20	
6 (9/1996)	Spider-Gtv	55-26	3	
6 (9/1996)	Spider-Gtv	55-26	6 to 7	
6 (9/1996)	Spider-Gtv	55-26		7/1 to 7/2
6 (9/1996)	Spider-Gtv	55-26	8	
6 (9/1996)	Spider-Gtv	55-26	10	
6 (9/1996)	Spider-Gtv	55-26		10/1 to 10/4
6 (9/1996)	Spider-Gtv	55-26	11 to 13	
6 (9/1996)	Spider-Gtv	55-26	15 to 17	
6 (9/1996)	Spider-Gtv	55-27	2	
6 (9/1996)	Spider-Gtv	55-27		2/1 to 2/2
6 (9/1996)	Spider-Gtv	55-27	3 to 4	
3 (3/1995)	Spider-Gtv	55-28	1 to 2	
6 (9/1996)	Spider-Gtv	55-28	7 to 8	
3 (3/1995)	Spider-Gtv	55-28	15	
6 (9/1996)	Spider-Gtv	55-28	16	
6 (9/1996)	Spider-Gtv	55-28		16/1 to 16/2
6 (9/1996)	Spider-Gtv	55-28	17	
5 (12/1995)	Spider-Gtv	55-28	18	
6 (9/1996)	Spider-Gtv	55-29	1	
5 (3/1995)	Spider-Gtv	55-29	2 to 4	
5 (12/1995)	Spider-Gtv	55-29	7	
3 (3/1995)	Spider-Gtv	55-29	8	
5 (12/1995)	Spider-Gtv	55-29	11	
5 (12/1995)	Spider-Gtv	55-29	17a 18	
6 (9/1996)	Spider-Gtv	55-29A		1 to 18
3 (3/1995)	Spider-Gtv	55-30	1	
5 (12/1995)	Spider-Gtv	55-30	2 to 3	
5 (12/1995)	Spider-Gtv	55-30	7	
5 (12/1995)	Spider-Gtv	55-30	11	
3 (3/1995)	Spider-Gtv	55-30	17	
5 (12/1995)	Spider-Gtv	55-30	18	
5 (12/1995)	Spider-Gtv	55-A1	2 to 4	
6 (9/1996)	Spider-Gtv	55-A2	2	
5 (12/1995)	Spider-Gtv	55-A2	3	
5 (12/1995)	Spider-Gtv	55-A2	6	
5 (12/1995)	Spider-Gtv	55-A2		6/1
5 (12/1995)	Spider-Gtv	55-A2	7	
5 (12/1995)	Spider-Gtv	55-A2	10	
6 (9/1996)	Spider-Gtv	55-A2	11	
5 (12/1995)	Spider-Gtv	55-A2	12 to 16	
5 (12/1995)	Spider-Gtv	55-A2	19	
6 (9/1996)	Spider-Gtv	55-A2	21 to 23	
5 (12/1995)	Spider-Gtv	55-A2	24	
6 (9/1996)	Spider-Gtv	55-A2	26 to 28	

(continued)

UPDATE CARD

(continued)

UPDATE CARD				
UPDATE (DATE)	MODEL	SECTION	PAGE	
			SUBST.	ADDED
6 (9/1996)	Spider-Gtv	55-A2		28/1 to 28/2
6 (9/1996)	Spider-Gtv	55-A2	29 to 30	
5 (12/1995)	Spider-Gtv	55-A2	31	
6 (9/1996)	Spider-Gtv	55-A2	32 to 33	
5 (12/1995)	Spider-Gtv	55-A2		33/1 to 33/4
5 (12/1995)	Spider-Gtv	55-A2	34 to 35	
6 (9/1996)	Spider-Gtv	55-A2	36	
6 (9/1996)	Spider-Gtv	55-A2		36/1 to 36/4
5 (12/1995)	Spider-Gtv	55-A2	37	
6 (9/1996)	Spider-Gtv	55-A2	39	
5 (12/1995)	Spider-Gtv	55-A2	40	
5 (12/1995)	Spider-Gtv	55-A2		40/1 to 40/2
5 (12/1995)	Spider-Gtv	55-A2	41 to 43	
6 (9/1996)	Spider-Gtv	55-A2	44	
6 (9/1996)	Spider-Gtv	55-A2		44/1 to 44/2
5 (12/1995)	Spider-Gtv	55-A2	47	
6 (9/1996)	Spider-Gtv	55-A2	48	
6 (9/1996)	Spider-Gtv	55-A2		48/1 to 48/2
6 (9/1996)	Spider-Gtv	55-A2	49 to 54	
6 (9/1996)	Spider-Gtv	55-A2		54/1 to 54/2
6 (9/1996)	Spider-Gtv	55-A2	55 to 60	
(3/1995)	Gtv V6 TB	-	Index	
3 (3/1995)	Gtv V6 TB	55		1 to 8
3 (3/1995)	Gtv V6 TB	55-2		1 to 4
3 (3/1995)	Gtv V6 TB	55-3	1 to 2	
5 (12/1995)	Gtv V6 TB	55-3	3	
3 (3/1995)	Gtv V6 TB	55-3		4
3 (3/1995)	Gtv V6 TB	55-13	1	
3 (3/1995)	Gtv V6 TB	55-13		2 to 3
3 (3/1995)	Gtv V6 TB	55-13		4 to 5
3 (3/1995)	Gtv V6 TB	55-26	1	
5 (12/1995)	Gtv V6 TB	55-26	2 to 3	
3 (3/1995)	Gtv V6 TB	55-28	1	
3 (3/1995)	Gtv V6 TB	55-28		2 to 3
3 (3/1995)	Gtv V6 TB	55-30	1	
5 (12/1995)	Gtv V6 TB	55-30	2 to 4	
3 (3/1995)	Gtv V6 TB	55-30	5 to 6	
5 (12/1995)	Gtv V6 TB	55-30	7	
3 (3/1995)	Gtv V6 TB	55-30	8 to 10	
5 (12/1995)	Gtv V6 TB	55-30	11	
5 (12/1995)	Gtv V6 TB	55-30		12 to 16
5 (12/1995)	Gtv V6 TB	55-30	17	
3 (3/1995)	Gtv V6 TB	55-A1		1
3 (3/1995)	Gtv V6 TB	55-A1	2 to 3	
3 (3/1995)	Gtv V6 TB	55-A1		4
3 (3/1995)	Gtv V6 TB	55-A1		1
5 (12/1995)	Gtv V6 TB	55-A2	2 to 3	
3 (3/1995)	Gtv V6 TB	55-A2		4 to 9
6 (9/1996)	Gtv 3.0V6	-		Index
6 (9/1996)	Gtv 3.0V6	55		1 to 13
6 (9/1996)	Gtv 3.0V6	55-1		1 to 3
6 (9/1996)	Gtv 3.0V6	55-2		1 to 4
6 (9/1996)	Gtv 3.0V6	55-3		1 to 6

UPDATE CARD				
UPDATE (DATE)	MODEL	SECTION	PAGE	
			SUBST.	ADDED
6 (9/1996)	Gtv 3.0V6	55-10		1 to 3
6 (9/1996)	Gtv 3.0V6	55-13		1 to 5
6 (9/1996)	Gtv 3.0V6	55-26		1 to 12
6 (9/1996)	Gtv 3.0V6	55-27		1 to 4
6 (9/1996)	Gtv 3.0V6	55-28		1 to 3
6 (9/1996)	Gtv 3.0V6	55-30		1 to 17
6 (9/1996)	Gtv 3.0V6	55-A1		1 to 4
6 (9/1996)	Gtv 3.0V6	55-A2		1 to 12
		VOLUME III SECTION II		
8 (3/1998)	Spider-Gtv	-		Frontespice
7 (4/1997)	Spider-Gtv '97	-		Index
7 (4/1997)	Spider-Gtv '97	55-1		1 to 6
7 (4/1997)	Spider-Gtv '97	55-2		1 to 13
7 (4/1997)	Spider-Gtv '97	55-3		1 to 15
7 (4/1997)	Spider-Gtv '97	55-4		1 to 5
7 (4/1997)	Spider-Gtv '97	55-5		1 to 4
7 (4/1997)	Spider-Gtv '97	55-6		1 to 5
7 (4/1997)	Spider-Gtv '97	55-7		1 to 6
7 (4/1997)	Spider-Gtv '97	55-8		1 to 6
7 (4/1997)	Spider-Gtv '97	55-9		1 to 6
7 (4/1997)	Spider-Gtv '97	55-10		1 to 4
7 (4/1997)	Spider-Gtv '97	55-11		1 to 5
7 (4/1997)	Spider-Gtv '97	55-12		1 to 7
7 (4/1997)	Spider-Gtv '97	55-13		1 to 16
7 (4/1997)	Spider-Gtv '97	55-14		1 to 8
7 (4/1997)	Spider-Gtv '97	55-15		1 to 6
7 (4/1997)	Spider-Gtv '97	55-17		1 to 5
7 (4/1997)	Spider-Gtv '97	55-18		1 to 6
7 (4/1997)	Spider-Gtv '97	55-18A		1 to 17
7 (4/1997)	Spider-Gtv '97	55-19		1 to 6
10 (11/1999)	**Spider-Gtv'97**	**55-20**	**1 to 4**	
7 (4/1997)	Spider-Gtv '97	55-20		5 to 8
7 (4/1997)	Spider-Gtv '97	55-21		1 to 5
8 (3/1998)	Spider-Gtv '97	55-23	1 to 12	
8 (3/1998)	Spider-Gtv '97	55-23		13 to 16
				ANNULLED
7 (4/1997)	Spider-Gtv '97	55-24		1 to 4
7 (4/1997)	Spider-Gtv '97	55-25		1 to 6
7 (4/1997)	Spider-Gtv '97	55-26		1 to 28
7 (4/1997)	Spider-Gtv '97	55-27		1 to 8
7 (4/1997)	Spider-Gtv '97	55-28		1 to 24
7 (4/1997)	Spider-Gtv '97	55-29A		1 to 17
7 (4/1997)	Spider-Gtv '97	55-29B		1 to 18
7 (4/1997)	Spider-Gtv '97	55-29C		1 to 17
7 (4/1997)	Spider-Gtv '97	55-29D		1 to 18
7 (4/1997)	Spider-Gtv '97	55-31		1 to 11
7 (4/1997)	Spider-Gtv '97	55-A1		1 to 4
7 (4/1997)	Spider-Gtv '97	55-A2		1 to 78

(continued)

Spider
Gtv

VOLUME III

REPAIR
INSTRUCTIONS

UPDATE CARD

(continued)

UPDATE CARD

UPDATE (DATE)	MODEL	SECTION	PAGE	
			SUBST.	ADDED
10 (11/1999)	**Spider-Gtv '98**		**Index**	
9 (9/1998)	Spider-Gtv '98	55-1		1
10 (11/1999)	**Spider-Gtv '98**	**55-1**	**2**	
9 (9/1998)	Spider-Gtv '98	55-1		3
10 (11/1999)	**Spider-Gtv '98**	**55-1**	**4**	
10 (11/1999)	**Spider-Gtv '98**	**55-1**		**4/1 to 4/2**
10 (11/1999)	**Spider-Gtv '98**	**55-1**	**5**	
9 (9/1998)	Spider-Gtv '98	55-1		6
9 (9/1998)	Spider-Gtv '98	55-2		1 to 3
10 (11/1999)	**Spider-Gtv '98**	**55-2**	**4**	
10 (11/1999)	**Spider-Gtv '98**	**55-2**		**4/1 to 4/2**
10 (11/1999)	**Spider-Gtv '98**	**55-2**	**5 to 6**	
10 (11/1999)	**Spider-Gtv '98**	**55-2**		**6/1 to 6/2**
9 (9/1998)	Spider-Gtv '98	55-2		7 to 10
10 (11/1999)	**Spider-Gtv '98**	**55-2**	**11**	
9 (9/1998)	Spider-Gtv '98	55-2		12
9 (9/1998)	Spider-Gtv '98	55-3		1 to 2
10 (11/1999)	**Spider-Gtv '98**	**55-3**	**3 to 4**	
10 (11/1999)	**Spider-Gtv '98**	**55-3**		**4/1 to 4/2**
10 (11/1999)	**Spider-Gtv '98**	**55-3**	**5 to 9**	
9 (9/1998)	Spider-Gtv '98	55-3		10 to 12
10 (11/1999)	**Spider-Gtv '98**	**55-3**	**13 to 14**	
9 (9/1998)	Spider-Gtv '98	55-4		1
10 (11/1999)	**Spider-Gtv '98**	**55-4**	**2**	
9 (9/1998)	Spider-Gtv '98	55-4		3 to 5
10 (11/1999)	**Spider-Gtv '98**	**55-5**	**1**	
9 (9/1998)	Spider-Gtv '98	55-5		2
10 (11/1999)	**Spider-Gtv '98**	**55-5**	**3 to 4**	
10 (11/1999)	**Spider-Gtv '98**	**55-5**		**5 to 6**
10 (11/1999)	**Spider-Gtv '98**	**55-6**	**1**	
9 (9/1998)	Spider-Gtv '98	55-6		2
10 (11/1999)	**Spider-Gtv '98**	**55-6**	**3 to 5**	
10 (11/1999)	**Spider-Gtv '98**	**55-6**		**6**
10 (11/1999)	**Spider-Gtv '98**	**55-7**	**1**	
9 (9/1998)	Spider-Gtv '98	55-7		2
10 (11/1999)	**Spider-Gtv '98**	**55-7**	**3 to 6**	
10 (11/1999)	**Spider-Gtv '98**	**55-7**		**7 to 8**
10 (11/1999)	**Spider-Gtv '98**	**55-8**	**1**	
9 (9/1998)	Spider-Gtv '98	55-8		2
10 (11/1999)	**Spider-Gtv '98**	**55-8**	**3 to 6**	
10 (11/1999)	**Spider-Gtv '98**	**55-8**		**7 to 8**
10 (11/1999)	**Spider-Gtv '98**	**55-9**	**1**	
9 (9/1998)	Spider-Gtv '98	55-9		2
10 (11/1999)	**Spider-Gtv '98**	**55-9**	**3 to 6**	
10 (11/1999)	**Spider-Gtv '98**	**55-9**		**7 to 8**
9 (9/1998)	Spider-Gtv '98	55-10		1
10 (11/1999)	**Spider-Gtv '98**	**55-10**	**2**	
9 (9/1998)	Spider-Gtv '98	55-10		3
10 (11/1999)	**Spider-Gtv '98**	**55-10**	**4**	
9 (9/1998)	Spider-Gtv '98	55-11		1
10 (11/1999)	**Spider-Gtv '98**	**55-11**	**2**	
9 (9/1998)	Spider-Gtv '98	55-11		3 to 5
9 (9/1998)	Spider-Gtv '98	55-12		1
10 (11/1999)	**Spider-Gtv '98**	**55-12**	**2 to 4**	
9 (9/1998)	Spider-Gtv '98	55-12		5 to 7
9 (9/1998)	Spider-Gtv '98	55-13		1 to 6
10 (11/1999)	**Spider-Gtv '98**	**55-13**	**7**	
9 (9/1998)	Spider-Gtv '98	55-13		8
10 (11/1999)	**Spider-Gtv '98**	**55-13**	**9 to 11**	
9 (9/1998)	Spider-Gtv '98	55-13		12 to 13
10 (11/1999)	**Spider-Gtv '98**	**55-13**	**14**	
10 (11/1999)	**Spider-Gtv '98**	**55-14**	**1 to 3**	
9 (9/1998)	Spider-Gtv '98	55-14		4
10 (11/1999)	**Spider-Gtv '98**	**55-14**		**4/1 to 4/2**
10 (11/1999)	**Spider-Gtv '98**	**55-14**	**5**	
9 (9/1998)	Spider-Gtv '98	55-14		6 to 8
10 (11/1999)	**Spider-Gtv '98**	**55-15**	**1**	
9 (9/1998)	Spider-Gtv '98	55-15		2
10 (11/1999)	**Spider-Gtv '98**	**55-15**	**3 to 6**	
10 (11/1999)	**Spider-Gtv '98**	**55-15**		**7 to 8**
10 (11/1999)	**Spider-Gtv '98**	**55-17**	**1**	
9 (9/1998)	Spider-Gtv '98	55-17		2
10 (11/1999)	**Spider-Gtv '98**	**55-17**	**3 to 5**	
10 (11/1999)	**Spider-Gtv '98**	**55-17**		**6**
9 (9/1998)	Spider-Gtv '98	55-18		1
10 (11/1999)	**Spider-Gtv '98**	**55-18**	**2 to 4**	
9 (9/1998)	Spider-Gtv '98	55-18		5 to 6
9 (9/1998)	Spider-Gtv '98	55-18A		1 to 7
10 (11/1999)	**Spider-Gtv '98**	**55-18A**	**8**	
9 (9/1998)	Spider-Gtv '98	55-18A		9
10 (11/1999)	**Spider-Gtv '98**	**55-18A**	**10 to 16**	
9 (9/1998)	Spider-Gtv '98	55-18A		17
10 (11/1999)	**Spider-Gtv '98**	**55-19**	**1**	
9 (9/1998)	Spider-Gtv '98	55-19		2
10 (11/1999)	**Spider-Gtv '98**	**55-19**	**3 to 6**	
10 (11/1999)	**Spider-Gtv '98**	**55-19**		**7 to 8**
10 (11/1999)	**Spider-Gtv '98**	**55-20**	**1 to 8**	
10 (11/1999)	**Spider-Gtv '98**	**55-20**		**9 to 10**
10 (11/1999)	**Spider-Gtv '98**	**55-21**	**1**	
9 (9/1998)	Spider-Gtv '98	55-21		2
10 (11/1999)	**Spider-Gtv '98**	**55-21**	**3 to 5**	
10 (11/1999)	**Spider-Gtv '98**	**55-21**		**6**
10 (11/1999)	**Spider-Gtv '98**	**55-22**	**1 to 4**	
9 (9/1998)	Spider-Gtv '98	55-22A		1
10 (11/1999)	**Spider-Gtv '98**	**55-22A**	**2 to 4**	
9 (9/1998)	Spider-Gtv '98	55-22B		1
10 (11/1999)	**Spider-Gtv '98**	**55-22B**	**2 to 4**	
9 (9/1998)	Spider-Gtv '98	55-23	1	
8 (3/1998)	Spider-Gtv '98	55-23		2 to 6
9 (9/1998)	Spider-Gtv '98	55-23	7	
8 (3/1998)	Spider-Gtv '98	55-23	8 to 9	
9 (9/1998)	Spider-Gtv '98	55-23	10	
9 (9/1998)	Spider-Gtv '98	55-23		11
9 (9/1998)	Spider-Gtv '98	55-24		1
10 (11/1999)	**Spider-Gtv '98**	**55-24**	**2**	
9 (9/1998)	Spider-Gtv '98	55-24		3 to 4
9 (9/1998)	Spider-Gtv '98	55-26	1	
10 (11/1999)	**Spider-Gtv '98**	**55-26**	**2**	
9 (9/1998)	Spider-Gtv '98	55-26	3	
9 (9/1998)	Spider-Gtv '98	55-26		4

UPDATE CARD

(continued)

UPDATE CARD				
UPDATE (DATE)	MODEL	SECTION	PAGE	
			SUBST.	ADDED
10 (11/1999)	**Spider-Gtv '98**	**55-26**		**4/1 to 4/2**
10 (11/1999)	**Spider-Gtv '98**	**55-26**	**5**	
9 (9/1998)	Spider-Gtv '98	55-26		6
10 (11/1999)	**Spider-Gtv '98**	**55-26**		**6/1 to 6/2**
10 (11/1999)	**Spider-Gtv '98**	**55-26**	**7 to 8**	
9 (9/1998)	Spider-Gtv '98	55-26		9
10 (11/1999)	**Spider-Gtv '98**	**55-26**	**10**	
10 (11/1999)	**Spider-Gtv '98**	**55-26**		**10/1 to 10/2**
9 (9/1998)	Spider-Gtv '98	55-26		11
10 (11/1999)	**Spider-Gtv '98**	**55-26**	**12**	
10 (11/1999)	**Spider-Gtv '98**	**55-26**		**12/1 to 12/2**
10 (11/1999)	**Spider-Gtv '98**	**55-26**	**13 to 18**	
10 (11/1999)	**Spider-Gtv '98**	**55-27**		**1 to 4**
9 (9/1998)	Spider-Gtv '98	55-28		1 to 2
10 (11/1999)	**Spider-Gtv '98**	**55-28**	**3**	
9 (9/1998)	Spider-Gtv '98	55-28		4
10 (11/1999)	**Spider-Gtv '98**	**55-28**	**5 to 9**	
9 (9/1998)	Spider-Gtv '98	55-28		10 to 12
9 (9/1998)	Spider-Gtv '98	55-29A	1	
10 (11/1999)	**Spider-Gtv '98**	**55-29A**	**2 to 3**	
8 (3/1998)	Spider-Gtv '98	55-29A		4
10 (11/1999)	**Spider-Gtv '98**	**55-29A**	**5**	
8 (3/1998)	Spider-Gtv '98	55-29A		6
9 (9/1998)	Spider-Gtv '98	55-29A	7	
10 (11/1999)	**Spider-Gtv '98**	**55-29A**	**8**	
9 (9/1998)	Spider-Gtv '98	55-29B		1
10 (11/1999)	**Spider-Gtv '98**	**55-29B**	**2 to 3**	
9 (9/1998)	Spider-Gtv '98	55-29B		4 to 6
10 (11/1999)	**Spider-Gtv '98**	**55-29B**	**7 to 8**	
9 (9/1998)	Spider-Gtv '98	55-29C		1
10 (11/1999)	**Spider-Gtv '98**	**55-29C**	**2 to 4**	
9 (9/1998)	Spider-Gtv '98	55-29C		5 to 8
10 (11/1999)	**Spider-Gtv '98**	**55-29C**	**9 to 10**	
9 (9/1998)	Spider-Gtv '98	55-29D	1	
10 (11/1999)	**Spider-Gtv '98**	**55-29D**	**2 to 3**	
8 (3/1998)	Spider-Gtv '98	55-29D		4 to 5
9 (9/1998)	Spider-Gtv '98	55-29D	6	
10 (11/1999)	**Spider-Gtv '98**	**55-29D**	**7 to 8**	
9 (9/1998)	Spider-Gtv '98	55-31		1
10 (11/1999)	**Spider-Gtv '98**	**55-31**	**2 to 3**	
9 (9/1998)	Spider-Gtv '98	55-31		4 to 5
9 (3/1998)	Spider-Gtv '98	55-32	1	
10 (11/1999)	**Spider-Gtv '98**	**55-32**	**2**	
9 (3/1998)	Spider-Gtv '98	55-32	3	
10 (11/1999)	**Spider-Gtv '98**	**55-32**	**4**	
9 (9/1998)	Spider-Gtv '98	55-A1		1 to 2
10 (11/1999)	**Spider-Gtv '98**	**55-A1**	**3 to 4**	
10 (11/1999)	**Spider-Gtv '98**	**55-A2**	**1 to 83**	
10 (11/1999)	**Spider-Gtv '98**	**55-A2**		**84 to 94**

UPDATE CARD

Spider
Gtv
VOLUME III

REPAIR
INSTRUCTIONS

UPDATE CARD				
UPDATE (DATE)	MODEL	SECTION	PAGE	
			SUBST.	ADDED
	VOLUME III			
7 (4/1997)	Spider-Gtv	-	Frontespice	
9 (9/1998)	Spider-Gtv		Index	
6 (9/1996)	Spider-Gtv	55	3	
6 (9/1996)	Spider-Gtv	55		5/1 to 5/6
6 (9/1996)	Spider-Gtv	55		10/1 to 10/6
9 (9/1998)	Spider-Gtv	55	12	
9 (9/1998)	Spider-Gtv	55		12/1 to 12/2
9 (9/1998)	Spider-Gtv	55	16	
9 (9/1998)	Spider-Gtv	55	21 to 22	
9 (9/1998)	Spider-Gtv	55		22/1 to 22/2
7 (4/1997)	Spider-Gtv	55	25	
8 (3/1998)	Spider-Gtv	55	26	
8 (3/1998)	Spider-Gtv	55		26/1
9 (9/1998)	Spider-Gtv	55	26/2	
9 (9/1998)	Spider-Gtv	55	27 to 30	
9 (9/1998)	Spider-Gtv	55		30/1 to 30/2
9 (9/1998)	Spider-Gtv	55	31	
8 (3/1998)	Spider-Gtv	55	34 to 35	
7 (4/1997)	Spider-Gtv	55	37	
8 (3/1998)	Spider-Gtv	55	38 to 39	
9 (9/1998)	Spider-Gtv	55	40 to 44	
9 (9/1998)	Spider-Gtv	55		45 to 46
6 (9/1996)	Spider-Gtv	55	Index I	
6 (9/1996)	Spider-Gtv	55	Index II	
5 (12/1995)	Spider-Gtv	55-I	9	
3 (3/1995)	Spider-Gtv	55-1	2	
6 (9/1996)	Spider-Gtv	55-1	4	
5 (12/1995)	Spider-Gtv	55-1	6	
6 (9/1996)	Spider-Gtv	55-2	3	
6 (9/1996)	Spider-Gtv	55-2	5	
5 (12/1995)	Spider-Gtv	55-2	6 to 7	
5 (12/1995)	Spider-Gtv	55-2	9	
5 (12/1995)	Spider-Gtv	55-3	2	
6 (9/1996)	Spider-Gtv	55-3	3	
6 (9/1996)	Spider-Gtv	55-3	5 to 6	
5 (12/1995)	Spider-Gtv	55-3	7 to 9	
5 (12/1995)	Spider-Gtv	55-3	11	
6 (9/1996)	Spider-Gtv	55-3	14	
5 (12/1995)	Spider-Gtv	55-3	15	
5 (12/1995)	Spider-Gtv	55-3		16
3 (3/1995)	Spider-Gtv	55-4	4	
5 (12/1995)	Spider-Gtv	55-8	2	
5 (12/1995)	Spider-Gtv	55-8	5	
5 (12/1995)	Spider-Gtv	55-13	6 to 7	
5 (12/1995)	Spider-Gtv	55-13	12 to 13	
5 (12/1995)	Spider-Gtv	55-14	2 to 3	
5 (12/1995)	Spider-Gtv	55-14	6 to 8	
5 (12/1995)	Spider-Gtv	55-15	2	
5 (12/1995)	Spider-Gtv	55-15	4	
6 (9/1996)	Spider-Gtv	55-16	1	
5 (12/1995)	Spider-Gtv	55-16	8	
5 (12/1995)	Spider-Gtv	55-16	10	
5 (12/1995)	Spider-Gtv	55-18	2	

UPDATE CARD				
UPDATE (DATE)	MODEL	SECTION	PAGE	
			SUBST.	ADDED
5 (12/1995)	Spider-Gtv	55-18		2/1 to 2/2
5 (12/1995)	Spider-Gtv	55-18	3	
5 (12/1995)	Spider-Gtv	55-18A	1 to 9	
5 (12/1995)	Spider-Gtv	55-18A		10 to 17
6 (9/1996)	Spider-Gtv	55-23	1	
8 (3/1998)	Spider-Gtv	55-23	2 to 9	
8 (3/1998)	Spider-Gtv	55-23		10 to 12 ANNULLED
6 (9/1996)	Spider-Gtv	55-23	13 to 20	
6 (9/1996)	Spider-Gtv	55-26	3	
6 (9/1996)	Spider-Gtv	55-26	6 to 7	
6 (9/1996)	Spider-Gtv	55-26		7/1 to 7/2
6 (9/1996)	Spider-Gtv	55-26	8	
6 (9/1996)	Spider-Gtv	55-26	10	
6 (9/1996)	Spider-Gtv	55-26		10/1 to 10/4
6 (9/1996)	Spider-Gtv	55-26	11 to 13	
6 (9/1996)	Spider-Gtv	55-26	15 to 17	
6 (9/1996)	Spider-Gtv	55-27	2	
6 (9/1996)	Spider-Gtv	55-27		2/1 to 2/2
6 (9/1996)	Spider-Gtv	55-27	3 to 4	
3 (3/1995)	Spider-Gtv	55-28	1 to 2	
6 (9/1996)	Spider-Gtv	55-28	7 to 8	
3 (3/1995)	Spider-Gtv	55-28	15	
6 (9/1996)	Spider-Gtv	55-28	16	
6 (9/1996)	Spider-Gtv	55-28		16/1 to 16/2
6 (9/1996)	Spider-Gtv	55-28	17	
5 (12/1995)	Spider-Gtv	55-28	18	
6 (9/1996)	Spider-Gtv	55-29	1	
5 (3/1995)	Spider-Gtv	55-29	2 to 4	
5 (12/1995)	Spider-Gtv	55-29	7	
3 (3/1995)	Spider-Gtv	55-29	8	
5 (12/1995)	Spider-Gtv	55-29	11	
5 (12/1995)	Spider-Gtv	55-29	17a 18	
6 (9/1996)	Spider-Gtv	55-29A		1 to 18
3 (3/1995)	Spider-Gtv	55-30	1	
5 (12/1995)	Spider-Gtv	55-30	2 to 3	
5 (12/1995)	Spider-Gtv	55-30	7	
5 (12/1995)	Spider-Gtv	55-30	11	
3 (3/1995)	Spider-Gtv	55-30	17	
5 (12/1995)	Spider-Gtv	55-30	18	
5 (12/1995)	Spider-Gtv	55-A1	2 to 4	
6 (9/1996)	Spider-Gtv	55-A2	2	
5 (12/1995)	Spider-Gtv	55-A2	3	
5 (12/1995)	Spider-Gtv	55-A2	6	
5 (12/1995)	Spider-Gtv	55-A2		6/1
5 (12/1995)	Spider-Gtv	55-A2	7	
5 (12/1995)	Spider-Gtv	55-A2	10	
6 (9/1996)	Spider-Gtv	55-A2	11	
5 (12/1995)	Spider-Gtv	55-A2	12 to 16	
5 (12/1995)	Spider-Gtv	55-A2	19	
6 (9/1996)	Spider-Gtv	55-A2	21 to 23	
5 (12/1995)	Spider-Gtv	55-A2	24	
6 (9/1996)	Spider-Gtv	55-A2	26 to 28	
6 (9/1996)	Spider-Gtv	55-A2		28/1 to 28/2

(continued)

UPDATE CARD

(continued)

UPDATE CARD

UPDATE (DATE)	MODEL	SECTION	PAGE	
			SUBST.	ADDED
6 (9/1996)	Spider-Gtv	55-A2	29 to 30	
5 (12/1995)	Spider-Gtv	55-A2	31	
6 (9/1996)	Spider-Gtv	55-A2	32 to 33	
5 (12/1995)	Spider-Gtv	55-A2		33/1 to 33/4
5 (12/1995)	Spider-Gtv	55-A2	34 to 35	
6 (9/1996)	Spider-Gtv	55-A2	36	
6 (9/1996)	Spider-Gtv	55-A2		36/1 to 36/4
5 (12/1995)	Spider-Gtv	55-A2	37	
6 (9/1996)	Spider-Gtv	55-A2	39	
5 (12/1995)	Spider-Gtv	55-A2	40	
5 (12/1995)	Spider-Gtv	55-A2		40/1 to 40/2
5 (12/1995)	Spider-Gtv	55-A2	41 to 43	
6 (9/1996)	Spider-Gtv	55-A2	44	
6 (9/1996)	Spider-Gtv	55-A2		44/1 to 44/2
5 (12/1995)	Spider-Gtv	55-A2	47	
6 (9/1996)	Spider-Gtv	55-A2	48	
6 (9/1996)	Spider-Gtv	55-A2		48/1 to 48/2
6 (9/1996)	Spider-Gtv	55-A2	49 to 54	
6 (9/1996)	Spider-Gtv	55-A2		54/1 to 54/2
6 (9/1996)	Spider-Gtv	55-A2	55 to 60	
(3/1995)	Gtv V6 TB	-	Index	
3 (3/1995)	Gtv V6 TB	55		1 to 8
3 (3/1995)	Gtv V6 TB	55-2		1 to 4
3 (3/1995)	Gtv V6 TB	55-3	1 to 2	
5 (12/1995)	Gtv V6 TB	55-3	3	
3 (3/1995)	Gtv V6 TB	55-3		4
3 (3/1995)	Gtv V6 TB	55-13	1	
3 (3/1995)	Gtv V6 TB	55-13		2 to 3
3 (3/1995)	Gtv V6 TB	55-13		4 to 5
3 (3/1995)	Gtv V6 TB	55-26	1	
5 (12/1995)	Gtv V6 TB	55-26	2 to 3	
3 (3/1995)	Gtv V6 TB	55-28	1	
3 (3/1995)	Gtv V6 TB	55-28		2 to 3
3 (3/1995)	Gtv V6 TB	55-30	1	
5 (12/1995)	Gtv V6 TB	55-30	2 to 4	
3 (3/1995)	Gtv V6 TB	55-30	5 to 6	
5 (12/1995)	Gtv V6 TB	55-30	7	
3 (3/1995)	Gtv V6 TB	55-30	8 to 10	
5 (12/1995)	Gtv V6 TB	55-30	11	
5 (12/1995)	Gtv V6 TB	55-30		12 to 16
5 (12/1995)	Gtv V6 TB	55-30	17	
3 (3/1995)	Gtv V6 TB	55-A1		1
3 (3/1995)	Gtv V6 TB	55-A1	2 to 3	
3 (3/1995)	Gtv V6 TB	55-A1		4
3 (3/1995)	Gtv V6 TB	55-A1		1
5 (12/1995)	Gtv V6 TB	55-A2	2 to 3	
3 (3/1995)	Gtv V6 TB	55-A2		4 to 9
6 (9/1996)	Gtv 3.0V6	-		Index
6 (9/1996)	Gtv 3.0V6	55		1 to 13
6 (9/1996)	Gtv 3.0V6	55-1		1 to 3
6 (9/1996)	Gtv 3.0V6	55-2		1 to 4
6 (9/1996)	Gtv 3.0V6	55-3		1 to 6
6 (9/1996)	Gtv 3.0V6	55-10		1 to 3

UPDATE CARD

UPDATE (DATE)	MODEL	SECTION	PAGE	
			SUBST.	ADDED
6 (9/1996)	Gtv 3.0V6	55-13		1 to 5
6 (9/1996)	Gtv 3.0V6	55-26		1 to 12
6 (9/1996)	Gtv 3.0V6	55-27		1 to 4
6 (9/1996)	Gtv 3.0V6	55-28		1 to 3
6 (9/1996)	Gtv 3.0V6	55-30		1 to 17
6 (9/1996)	Gtv 3.0V6	55-A1		1 to 4
6 (9/1996)	Gtv 3.0V6	55-A2		1 to 12
		VOLUME III SECTION II		
8 (3/1998)	Spider-Gtv	-		Frontespice
7 (4/1997)	Spider-Gtv '97	-		Index
7 (4/1997)	Spider-Gtv '97	55-1		1 to 6
7 (4/1997)	Spider-Gtv '97	55-2		1 to 13
7 (4/1997)	Spider-Gtv '97	55-3		1 to 15
7 (4/1997)	Spider-Gtv '97	55-4		1 to 5
7 (4/1997)	Spider-Gtv '97	55-5		1 to 4
7 (4/1997)	Spider-Gtv '97	55-6		1 to 5
7 (4/1997)	Spider-Gtv '97	55-7		1 to 6
7 (4/1997)	Spider-Gtv '97	55-8		1 to 6
7 (4/1997)	Spider-Gtv '97	55-9		1 to 6
7 (4/1997)	Spider-Gtv '97	55-10		1 to 4
7 (4/1997)	Spider-Gtv '97	55-11		1 to 5
7 (4/1997)	Spider-Gtv '97	55-12		1 to 7
7 (4/1997)	Spider-Gtv '97	55-13		1 to 16
7 (4/1997)	Spider-Gtv '97	55-14		1 to 8
7 (4/1997)	Spider-Gtv '97	55-15		1 to 6
7 (4/1997)	Spider-Gtv '97	55-17		1 to 5
7 (4/1997)	Spider-Gtv '97	55-18		1 to 6
7 (4/1997)	Spider-Gtv '97	55-18A		1 to 17
7 (4/1997)	Spider-Gtv '97	55-19		1 to 6
7 (4/1997)	Spider-Gtv '97	55-20		1 to 8
7 (4/1997)	Spider-Gtv '97	55-21		1 to 5
8 (3/1998)	Spider-Gtv '97	55-23	1 to 12	
8 (3/1998)	Spider-Gtv '97	55-23		13 to 16
				ANNULLED
7 (4/1997)	Spider-Gtv '97	55-24		1 to 4
7 (4/1997)	Spider-Gtv '97	55-25		1 to 6
7 (4/1997)	Spider-Gtv '97	55-26		1 to 28
7 (4/1997)	Spider-Gtv '97	55-27		1 to 8
7 (4/1997)	Spider-Gtv '97	55-28		1 to 24
7 (4/1997)	Spider-Gtv '97	55-29A		1 to 17
7 (4/1997)	Spider-Gtv '97	55-29B		1 to 18
7 (4/1997)	Spider-Gtv '97	55-29C		1 to 17
7 (4/1997)	Spider-Gtv '97	55-29D		1 to 18
7 (4/1997)	Spider-Gtv '97	55-31		1 to 11
7 (4/1997)	Spider-Gtv '97	55-A1		1 to 4
7 (4/1997)	Spider-Gtv '97	55-A2		1 to 78
9 (9/1998)	Spider-Gtv '98		Index	
9 (9/1998)	Spider-Gtv '98	55-1		1 to 6
9 (9/1998)	Spider-Gtv '98	55-2		1 to 12
9 (9/1998)	Spider-Gtv '98	55-3		1 to 14
9 (9/1998)	Spider-Gtv '98	55-4		1 to 5

(continued)

UPDATE CARD

(continued)

UPDATE (DATE)	MODEL	SECTION	PAGE	
			SUBST.	ADDED
9 (9/1998)	Spider-Gtv '98	55-5		1 to 4
9 (9/1998)	Spider-Gtv '98	55-6		1 to 5
9 (9/1998)	Spider-Gtv '98	55-7		1 to 6
9 (9/1998)	Spider-Gtv '98	55-8		1 to 6
9 (9/1998)	Spider-Gtv '98	55-9		1 to 6
9 (9/1998)	Spider-Gtv '98	55-10		1a 4
9 (9/1998)	Spider-Gtv '98	55-11		1 to 5
9 (9/1998)	Spider-Gtv '98	55-12		1 to 7
9 (9/1998)	Spider-Gtv '98	55-13		1 to 14
9 (9/1998)	Spider-Gtv '98	55-14		1 to 8
9 (9/1998)	Spider-Gtv '98	55-15		1 to 6
9 (9/1998)	Spider-Gtv '98	55-17		1 to 5
9 (9/1998)	Spider-Gtv '98	55-18		1 to 6
9 (9/1998)	Spider-Gtv '98	55-18A		1 to 17
9 (9/1998)	Spider-Gtv '98	55-19		1 to 6
9 (9/1998)	Spider-Gtv '98	55-20		1 to 8
9 (9/1998)	Spider-Gtv '98	55-21		1 to 5
9 (9/1998)	Spider-Gtv '98	55-22		1 to 4
9 (9/1998)	Spider-Gtv '98	55-22A		1 to 4
9 (9/1998)	Spider-Gtv '98	55-22B		1 to 4
9 (9/1998)	Spider-Gtv '98	55-23	1	
8 (3/1998)	Spider-Gtv '98	55-23		2 to 6
9 (9/1998)	Spider-Gtv '98	55-23	7	
8 (3/1998)	Spider-Gtv '98	55-23	8 to 9	
9 (9/1998)	Spider-Gtv '98	55-23	10	
9 (9/1998)	Spider-Gtv '98	55-23		11
9 (9/1998)	Spider-Gtv '98	55-24		1 to 4
9 (9/1998)	Spider-Gtv '98	55-26	1 to 3	
9 (9/1998)	Spider-Gtv '98	55-26		4 to 17
9 (9/1998)	Spider-Gtv '98	55-28		1 to 12
9 (9/1998)	Spider-Gtv '98	55-29A	1 to 3	
8 (3/1998)	Spider-Gtv '98	55-29A		4 to 6
9 (9/1998)	Spider-Gtv '98	55-29A	7 to 8	
9 (9/1998)	Spider-Gtv '98	55-29B		1 to 7
9 (9/1998)	Spider-Gtv '98	55-29C		1 to 9
9 (9/1998)	Spider-Gtv '98	55-29D	1 to 3	
8 (3/1998)	Spider-Gtv '98	55-29D		4 to 5
9 (9/1998)	Spider-Gtv '98	55-29D	6 to 7	
9 (9/1998)	Spider-Gtv '98	55-31		1 to 5
9 (3/1998)	Spider-Gtv '98	55-32	1 to 3	
9 (9/1998)	Spider-Gtv '98	55-32		4
9 (9/1998)	Spider-Gtv '98	55-A1		1 to 4
9 (9/1998)	Spider-Gtv '98	55-A2		1 to 84

UPDATE (DATE)	MODEL	SECTION	PAGE	
			SUBST.	ADDED

UPDATE CARD

Spider
Gtv

VOLUME III

REPAIR INSTRUCTIONS

UPDATE CARD

UPDATE (DATE)	MODEL	SECTION	PAGE	
			SUBST.	ADDED
	VOLUME III			
7 (4/1997)	Spider-Gtv	-	Frontespice	
8 (3/1998)	Spider-Gtv		Index	
6 (9/1996)	Spider-Gtv	55	3	
6 (9/1996)	Spider-Gtv	55		5/1 to 5/6
6 (9/1996)	Spider-Gtv	55		10/1 to 10/6
7 (4/1997)	Spider-Gtv	55	25	
8 (3/1998)	Spider-Gtv	55	26	
8 (3/1998)	Spider-Gtv	55		26/1 to 26/2
8 (3/1998)	Spider-Gtv	55	34 to 35	
7 (4/1997)	Spider-Gtv	55	37	
8 (3/1998)	Spider-Gtv	55	38 to 39	
8 (3/1998)	Spider-Gtv	55	41	
3 (3/1995)	Spider-Gtv	55	42	
7 (4/1997)	Spider-Gtv	55	43 to 44	
6 (9/1996)	Spider-Gtv	55	Index I	
6 (9/1996)	Spider-Gtv	55	Index II	
5 (12/1995)	Spider-Gtv	55-I	9	
3 (3/1995)	Spider-Gtv	55-1	2	
6 (9/1996)	Spider-Gtv	55-1	4	
5 (12/1995)	Spider-Gtv	55-1	6	
6 (9/1996)	Spider-Gtv	55-2	3	
6 (9/1996)	Spider-Gtv	55-2	5	
5 (12/1995)	Spider-Gtv	55-2	6 to 7	
5 (12/1995)	Spider-Gtv	55-2	9	
5 (12/1995)	Spider-Gtv	55-3	2	
6 (9/1996)	Spider-Gtv	55-3	3	
6 (9/1996)	Spider-Gtv	55-3	5 to 6	
5 (12/1995)	Spider-Gtv	55-3	7 to 9	
5 (12/1995)	Spider-Gtv	55-3	11	
6 (9/1996)	Spider-Gtv	55-3	14	
5 (12/1995)	Spider-Gtv	55-3	15	
5 (12/1995)	Spider-Gtv	55-3		16
3 (3/1995)	Spider-Gtv	55-4	4	
5 (12/1995)	Spider-Gtv	55-8	2	
5 (12/1995)	Spider-Gtv	55-8	5	
5 (12/1995)	Spider-Gtv	55-13	6 to 7	
5 (12/1995)	Spider-Gtv	55-13	12 to 13	
5 (12/1995)	Spider-Gtv	55-14	2 to 3	
5 (12/1995)	Spider-Gtv	55-14	6 to 8	
5 (12/1995)	Spider-Gtv	55-15	2	
5 (12/1995)	Spider-Gtv	55-15	4	
6 (9/1996)	Spider-Gtv	55-16	1	
5 (12/1995)	Spider-Gtv	55-16	8	
5 (12/1995)	Spider-Gtv	55-16	10	
5 (12/1995)	Spider-Gtv	55-18	2	
5 (12/1995)	Spider-Gtv	55-18		2/1 to 2/2
5 (12/1995)	Spider-Gtv	55-18	3	
5 (12/1995)	Spider-Gtv	55-18A	1 to 9	
5 (12/1995)	Spider-Gtv	55-18A		10 to 17
6 (9/1996)	Spider-Gtv	55-23	1	
8 (3/1998)	Spider-Gtv	55-23	2 to 9	
8 (3/1998)	Spider-Gtv	55-23		10 to 12 ANNULLED

UPDATE CARD

UPDATE (DATE)	MODEL	SECTION	PAGE	
			SUBST.	ADDED
6 (9/1996)	Spider-Gtv	55-23	13 to 20	
6 (9/1996)	Spider-Gtv	55-26	3	
6 (9/1996)	Spider-Gtv	55-26	6 to 7	
6 (9/1996)	Spider-Gtv	55-26		7/1 to 7/2
6 (9/1996)	Spider-Gtv	55-26	8	
6 (9/1996)	Spider-Gtv	55-26	10	
6 (9/1996)	Spider-Gtv	55-26		10/1 to 10/4
6 (9/1996)	Spider-Gtv	55-26	11 to 13	
6 (9/1996)	Spider-Gtv	55-26	15 to 17	
6 (9/1996)	Spider-Gtv	55-27	2	
6 (9/1996)	Spider-Gtv	55-27		2/1 to 2/2
6 (9/1996)	Spider-Gtv	55-27	3 to 4	
3 (3/1995)	Spider-Gtv	55-28	1 to 2	
6 (9/1996)	Spider-Gtv	55-28	7 to 8	
3 (3/1995)	Spider-Gtv	55-28	15	
6 (9/1996)	Spider-Gtv	55-28	16	
6 (9/1996)	Spider-Gtv	55-28		16/1 to 16/2
6 (9/1996)	Spider-Gtv	55-28	17	
5 (12/1995)	Spider-Gtv	55-28	18	
6 (9/1996)	Spider-Gtv	55-29	1	
5 (3/1995)	Spider-Gtv	55-29	2 to 4	
5 (12/1995)	Spider-Gtv	55-29	7	
3 (3/1995)	Spider-Gtv	55-29	8	
5 (12/1995)	Spider-Gtv	55-29	11	
5 (12/1995)	Spider-Gtv	55-29	17a 18	
6 (9/1996)	Spider-Gtv	55-29A		1 to 18
3 (3/1995)	Spider-Gtv	55-30	1	
5 (12/1995)	Spider-Gtv	55-30	2 to 3	
5 (12/1995)	Spider-Gtv	55-30	7	
5 (12/1995)	Spider-Gtv	55-30	11	
3 (3/1995)	Spider-Gtv	55-30	17	
5 (12/1995)	Spider-Gtv	55-30	18	
5 (12/1995)	Spider-Gtv	55-A1	2 to 4	
6 (9/1996)	Spider-Gtv	55-A2	2	
5 (12/1995)	Spider-Gtv	55-A2	3	
5 (12/1995)	Spider-Gtv	55-A2	6	
5 (12/1995)	Spider-Gtv	55-A2		6/1
5 (12/1995)	Spider-Gtv	55-A2	7	
5 (12/1995)	Spider-Gtv	55-A2	10	
6 (9/1996)	Spider-Gtv	55-A2	11	
5 (12/1995)	Spider-Gtv	55-A2	12 to 16	
5 (12/1995)	Spider-Gtv	55-A2	19	
6 (9/1996)	Spider-Gtv	55-A2	21 to 23	
5 (12/1995)	Spider-Gtv	55-A2	24	
6 (9/1996)	Spider-Gtv	55-A2	26 to 28	
6 (9/1996)	Spider-Gtv	55-A2		28/1 to 28/2
6 (9/1996)	Spider-Gtv	55-A2	29 to 30	
5 (12/1995)	Spider-Gtv	55-A2	31	
6 (9/1996)	Spider-Gtv	55-A2	32 to 33	
5 (12/1995)	Spider-Gtv	55-A2		33/1 to 33/4
5 (12/1995)	Spider-Gtv	55-A2	34 to 35	
6 (9/1996)	Spider-Gtv	55-A2	36	
6 (9/1996)	Spider-Gtv	55-A2		36/1 to 36/4
5 (12/1995)	Spider-Gtv	55-A2	37	

(continued)

UPDATE CARD

Spider
Gtv
VOLUME III
REPAIR
INSTRUCTIONS

(continued)

UPDATE CARD				
UPDATE (DATE)	MODEL	SECTION	PAGE	
			SUBST.	ADDED
6 (9/1996)	Spider-Gtv	55-A2	39	
5 (12/1995)	Spider-Gtv	55-A2	40	
5 (12/1995)	Spider-Gtv	55-A2		40/1 to 40/2
5 (12/1995)	Spider-Gtv	55-A2	41 to 43	
6 (9/1996)	Spider-Gtv	55-A2	44	
6 (9/1996)	Spider-Gtv	55-A2		44/1 to 44/2
5 (12/1995)	Spider-Gtv	55-A2	47	
6 (9/1996)	Spider-Gtv	55-A2	48	
6 (9/1996)	Spider-Gtv	55-A2		48/1 to 48/2
6 (9/1996)	Spider-Gtv	55-A2	49 to 54	
6 (9/1996)	Spider-Gtv	55-A2		54/1 to 54/2
6 (9/1996)	Spider-Gtv	55-A2	55 to 60	
(3/1995)	Gtv V6 TB	-	Index	
3 (3/1995)	Gtv V6 TB	55		1 to 8
3 (3/1995)	Gtv V6 TB	55-2		1 to 4
3 (3/1995)	Gtv V6 TB	55-3	1 to 2	
5 (12/1995)	Gtv V6 TB	55-3	3	
3 (3/1995)	Gtv V6 TB	55-3		4
3 (3/1995)	Gtv V6 TB	55-13	1	
3 (3/1995)	Gtv V6 TB	55-13		2 to 3
3 (3/1995)	Gtv V6 TB	55-13		4 to 5
3 (3/1995)	Gtv V6 TB	55-26	1	
5 (12/1995)	Gtv V6 TB	55-26	2 to 3	
3 (3/1995)	Gtv V6 TB	55-28	1	
3 (3/1995)	Gtv V6 TB	55-28		2 to 3
3 (3/1995)	Gtv V6 TB	55-30	1	
5 (12/1995)	Gtv V6 TB	55-30	2 to 4	
3 (3/1995)	Gtv V6 TB	55-30	5 to 6	
5 (12/1995)	Gtv V6 TB	55-30	7	
3 (3/1995)	Gtv V6 TB	55-30	8 to 10	
5 (12/1995)	Gtv V6 TB	55-30	11	
5 (12/1995)	Gtv V6 TB	55-30		12 to 16
5 (12/1995)	Gtv V6 TB	55-30	17	
3 (3/1995)	Gtv V6 TB	55-A1		1
3 (3/1995)	Gtv V6 TB	55-A1	2 to 3	
3 (3/1995)	Gtv V6 TB	55-A1		4
3 (3/1995)	Gtv V6 TB	55-A1		1
5 (12/1995)	Gtv V6 TB	55-A2	2 to 3	
3 (3/1995)	Gtv V6 TB	55-A2		4 to 9
6 (9/1996)	Gtv 3.0V6	-		Index
6 (9/1996)	Gtv 3.0V6	55		1 to 13
6 (9/1996)	Gtv 3.0V6	55-1		1 to 3
6 (9/1996)	Gtv 3.0V6	55-2		1 to 4
6 (9/1996)	Gtv 3.0V6	55-3		1 to 6
6 (9/1996)	Gtv 3.0V6	55-10		1 to 3
6 (9/1996)	Gtv 3.0V6	55-13		1 to 5
6 (9/1996)	Gtv 3.0V6	55-26		1 to 12
6 (9/1996)	Gtv 3.0V6	55-27		1 to 4
6 (9/1996)	Gtv 3.0V6	55-28		1 to 3
6 (9/1996)	Gtv 3.0V6	55-30		1 to 17
6 (9/1996)	Gtv 3.0V6	55-A1		1 to 4
6 (9/1996)	Gtv 3.0V6	55-A2		1 to 12

UPDATE CARD				
UPDATE (DATE)	MODEL	SECTION	PAGE	
			SUBST.	ADDED
		VOLUME III SECTION II		
8 (3/1998)	Spider-Gtv	-		Frontespice
7 (4/1997)	Spider-Gtv '97	-		Index
7 (4/1997)	Spider-Gtv '97	55-1		1 to 6
7 (4/1997)	Spider-Gtv '97	55-2		1 to 13
7 (4/1997)	Spider-Gtv '97	55-3		1 to 15
7 (4/1997)	Spider-Gtv '97	55-4		1 to 5
7 (4/1997)	Spider-Gtv '97	55-5		1 to 4
7 (4/1997)	Spider-Gtv '97	55-6		1 to 5
7 (4/1997)	Spider-Gtv '97	55-7		1 to 6
7 (4/1997)	Spider-Gtv '97	55-8		1 to 6
7 (4/1997)	Spider-Gtv '97	55-9		1 to 6
7 (4/1997)	Spider-Gtv '97	55-10		1 to 4
7 (4/1997)	Spider-Gtv '97	55-11		1 to 5
7 (4/1997)	Spider-Gtv '97	55-12		1 to 7
7 (4/1997)	Spider-Gtv '97	55-13		1 to 16
7 (4/1997)	Spider-Gtv '97	55-14		1 to 8
7 (4/1997)	Spider-Gtv '97	55-15		1 to 6
7 (4/1997)	Spider-Gtv '97	55-17		1 to 5
7 (4/1997)	Spider-Gtv '97	55-18		1 to 6
7 (4/1997)	Spider-Gtv '97	55-18A		1 to 17
7 (4/1997)	Spider-Gtv '97	55-19		1 to 6
7 (4/1997)	Spider-Gtv '97	55-20		1 to 8
7 (4/1997)	Spider-Gtv '97	55-21		1 to 5
8 (3/1998)	Spider-Gtv '97	55-23	1 to 12	
8 (3/1998)	Spider-Gtv '97	55-23		13 to 16 ANNULLED
7 (4/1997)	Spider-Gtv '97	55-24		1 to 4
7 (4/1997)	Spider-Gtv '97	55-25		1 to 6
7 (4/1997)	Spider-Gtv '97	55-26		1 to 28
7 (4/1997)	Spider-Gtv '97	55-27		1 to 8
7 (4/1997)	Spider-Gtv '97	55-28		1 to 24
7 (4/1997)	Spider-Gtv '97	55-29A		1 to 17
7 (4/1997)	Spider-Gtv '97	55-29B		1 to 18
7 (4/1997)	Spider-Gtv '97	55-29C		1 to 17
7 (4/1997)	Spider-Gtv '97	55-29D		1 to 18
7 (4/1997)	Spider-Gtv '97	55-31		1 to 11
7 (4/1997)	Spider-Gtv '97	55-A1		1 to 4
7 (4/1997)	Spider-Gtv '97	55-A2		1 to 78
8 (3/1998)	Spider-Gtv '98			Index
8 (3/1998)	Spider-Gtv '98	55-23		1 to 10
8 (3/1998)	Spider-Gtv '98	55-26		1 to 3
8 (3/1998)	Spider-Gtv '98	55-29A		1 to 7
8 (3/1998)	Spider-Gtv '98	55-29D		1 to 5
8 (3/1998)	Spider-Gtv '98	55-32		1 to 3

Spider
Gtv
VOLUME III
REPAIR
INSTRUCTIONS

UPDATE CARD

UPDATE CHART

UPDATE (DATE)	MODEL	SECTION	PAGE	
			SUBST.	ADDED
1 (12/1994)	Spider-Gtv	-	Frontespice	
1 (12/1994)	Gtv V6TB	-		Index
1 (12/1994)	Gtv V6TB	55		2-1 to 2-4
1 (12/1994)	Gtv V6TB	55		3-1 to 3-3
1 (12/1994)	Gtv V6TB	55		13-1 to 13-3
1 (12/1994)	Gtv V6TB	55		26-1 to 26-3
1 (12/1994)	Gtv V6TB	55		28-1 to 28-3
1 (12/1994)	Gtv V6TB	55		30-to 30-10

Spider
Gtv

VOLUME III
REPAR
INSTRUCTIONS

UPDATE CARD

UPDATE CARD				
UPDATE (DATE)	MODEL	SECTION	PAGE	
			SUBST.	ADDED
1 (12/1994)	Spider- Gtv	-	Frontespice	
3 (3/1995)	Spider- Gtv	55	42	
3 (3/1995)	Spider- Gtv	55-1	2	
3 (3/1995)	Spider- Gtv	55-1	6	
3 (3/1995)	Spider- Gtv	55-3	14	
3 (3/1995)	Spider- Gtv	55-4	4	
3 (3/1995)	Spider- Gtv	55-18	2	
3 (3/1995)	Spider- Gtv	55-23	3	
3 (3/1995)	Spider- Gtv	55-23	5 to 6	
3 (3/1995)	Spider- Gtv	55-23	15	
3 (3/1995)	Spider- Gtv	55-28	15	
3 (3/1995)	Spider- Gtv	55-29	1 to 2	
3 (3/1995)	Spider- Gtv	55-29	7 to 8	
3 (3/1995)	Spider- Gtv	55-29	11	
3 (3/1995)	Spider- Gtv	55-29	17	
3 (3/1995)	Spider- Gtv	55-29		18
3 (3/1995)	Spider- Gtv	55-30	1	
3 (3/1995)	Spider- Gtv	55-30		17 to 18
3 (3/1995)	Spider- Gtv	55-A2	22	
3 (3/1995)	Spider- Gtv	55-A2	34	
3 (3/1995)	Spider- Gtv	55-A2	52	
3 (3/1995)	Spider- Gtv	55-A2	55	
3 (3/1995)	Spider- Gtv	55-A2	57	
3 (3/1995)	Gtv V6TB	-	Index	
3 (3/1995)	Gtv V6TB	55		1to 8
1 (12/1994)	Gtv V6TB	55-2		1 to 4
3 (3/1995)	Gtv V6TB	55-3	1 to 3	
3 (3/1995)	Gtv V6TB	55-3		4
3 (3/1995)	Gtv V6TB	55-13	1	
1 (3/1994)	Gtv V6TB	55-13		2 to 3
3 (3/1995)	Gtv V6TB	55-13		4 to 5
3 (3/1995)	Gtv V6TB	55-26	1	
1 (3/1994)	Gtv V6TB	55-26		2 to 3
3 (3/1995)	Gtv V6TB	55-28	1	
1 (3/1994)	Gtv V6TB	55-28		2 to 3
3 (3/1995)	Gtv V6TB	55-30	1	
1 (3/1994)	Gtv V6TB	55-30		2 to 4
3 (3/1995)	Gtv V6TB	55-30	5 to 10	
3 (3/1995)	Gtv V6TB	55-30		11 to 17
3 (3/1995)	Gtv V6TB	55-A1		1 to 4
3 (3/1995)	Gtv V6TB	55-A2		1 to 9

UPDATE CARD

Spider
Gtv

VOLUME III

REPAIR
INSTRUCTIONS

UPDATE CARD				
UPDATE. (DATE)	MODEL	SECTION	PAGE	
			SUBSTITUTED	ADDED
1 (12/1994)	Spider-Gtv	-	Frontespice	
3 (3/1995)	Spider-Gtv	55	42	
4 (5/1995)	Spider-Gtv	55	Index I	
4 (5/1995)	Spider-Gtv	55	Index II	
3 (3/1995)	Spider-Gtv	55-1	2	
3 (3/1995)	Spider-Gtv	55-1	6	
3 (3/1995)	Spider-Gtv	55-3	14	
3 (3/1995)	Spider-Gtv	55-4	4	
3 (3/1995)	Spider-Gtv	55-18	2	
4 (5/1995)	Spider-Gtv	55-18A		1 to 9
3 (3/1995)	Spider-Gtv	55-23	3	
3 (3/1995)	Spider-Gtv	55-23	5 to 6	
3 (3/1995)	Spider-Gtv	55-23	15	
3 (3/1995)	Spider-Gtv	55-23	15	
3 (3/1995)	Spider-Gtv	55-28	1 to 2	
3 (3/1995)	Spider-Gtv	55-29	7 to 8	
3 (3/1995)	Spider-Gtv	55-29	11	
3 (3/1995)	Spider-Gtv	55-29	17	
3 (3/1995)	Spider-Gtv	55-29		18
3 (3/1995)	Spider-Gtv	55-29	1	
3 (3/1995)	Spider-Gtv	55-30		17 to 18
3 (3/1995)	Spider-Gtv	55-30	22	
3 (3/1995)	Spider-Gtv	55-A2	34	
3 (3/1995)	Spider-Gtv	55-A2	52	
3 (3/1995)	Spider-Gtv	55-A2	55	
3 (3/1995)	Spider-Gtv	55-A2	57	
3 (3/1995)	Gtv V6 TB	-	Index	
3 (3/1995)	Gtv V6 TB	55		1 to 8
3 (3/1995)	Gtv V6 TB	55-2		1 to 4
3 (3/1995)	Gtv V6 TB	55-3	1 to 3	
3 (3/1995)	Gtv V6 TB	55-3		4
3 (3/1995)	Gtv V6 TB	55-13	1	
3 (3/1995)	Gtv V6 TB	55-13		2 to 3
3 (3/1995)	Gtv V6 TB	55-13		4 to 5
3 (3/1995)	Gtv V6 TB	55-26	1	
3 (3/1995)	Gtv V6 TB	55-26		2 to 3
3 (3/1995)	Gtv V6 TB	55-28	1	
3 (3/1995)	Gtv V6 TB	55-28		2 to 3
3 (3/1995)	Gtv V6 TB	55-30	1	
3 (3/1995)	Gtv V6 TB	55-30		2 to 4
3 (3/1995)	Gtv V6 TB	55-30	5 to 10	
3 (3/1995)	Gtv V6 TB	55-30		11 to 17
3 (3/1995)	Gtv V6 TB	55-A1		1 to 4
3 (3/1995)	Gtv V6 TB	55-A2		1 to 9

UPDATE CARD

Spider
Gtv
VOLUME III
REPAIR
INSTRUCTIONS

UPDATE CARD

UPDATE. (DATE)	MODEL	SECTION	PAGE	
			SUBSTITUTED	ADDED
1 (12/1994)	Spider-Gtv	-	Frontespice	
3 (3/1995)	Spider-Gtv	55	42	
4 (5/1995)	Spider-Gtv	55	Index I	
4 (5/1995)	Spider-Gtv	55	Index II	
5 (12/1995)	Spider-Gtv	55-I	9	
3 (3/1995)	Spider-Gtv	55-1	2	
5 (12/1995)	Spider-Gtv	55-1	4	
5 (12/1995)	Spider-Gtv	55-1	6	
5 (12/1995)	Spider-Gtv	55-2	6 to 7	
5 (12/1995)	Spider-Gtv	55-2	9	
5 (12/1995)	Spider-Gtv	55-3	2 to 3	
5 (12/1995)	Spider-Gtv	55-3	6 to 9	
5 (12/1995)	Spider-Gtv	55-3	11	
5 (12/1995)	Spider-Gtv	55-3	14 to 15	
5 (12/1995)	Spider-Gtv	55-3		16
3 (3/1995)	Spider-Gtv	55-4	4	
5 (12/1995)	Spider-Gtv	55-8	2	
5 (12/1995)	Spider-Gtv	55-8	5	
5 (12/1995)	Spider-Gtv	55-13	6 to 7	
5 (12/1995)	Spider-Gtv	55-13	12 to 13	
5 (12/1995)	Spider-Gtv	55-14	2 to 3	
5 (12/1995)	Spider-Gtv	55-14	6 to 8	
5 (12/1995)	Spider-Gtv	55-15	2	
5 (12/1995)	Spider-Gtv	55-15	4	
5 (12/1995)	Spider-Gtv	55-16	8	
5 (12/1995)	Spider-Gtv	55-16	10	
5 (12/1995)	Spider-Gtv	55-18	2	
5 (12/1995)	Spider-Gtv	55-18		2/1 to 2/2
5 (12/1995)	Spider-Gtv	55-18	3	
5 (12/1995)	Spider-Gtv	55-18A	1 to 9	
5 (12/1995)	Spider-Gtv	55-18A		10 to 17
3 (3/1995)	Spider-Gtv	55-23	3	
3 (3/1995)	Spider-Gtv	55-23	5 to 6	
5 (12/1995)	Spider-Gtv	55-23	12 to 14	
3 (3/1995)	Spider-Gtv	55-23	15	
5 (12/1995)	Spider-Gtv	55-23	17	
5 (12/1995)	Spider-Gtv	55-26	3	
5 (12/1995)	Spider-Gtv	55-26	6 to 8	
5 (12/1995)	Spider-Gtv	55-26	10 to 12	
3 (3/1995)	Spider-Gtv	55-28	1 to 2	
5 (12/1995)	Spider-Gtv	55-28	16 to 18	
5 (3/1995)	Spider-Gtv	55-29	2 to 4	
5 (12/1995)	Spider-Gtv	55-29	7	
3 (3/1995)	Spider-Gtv	55-29	8	
5 (12/1995)	Spider-Gtv	55-29	11	
5 (12/1995)	Spider-Gtv	55-29	17 to 18	
3 (3/1995)	Spider-Gtv	55-30	1	
5 (12/1995)	Spider-Gtv	55-30	2 to 3	
5 (12/1995)	Spider-Gtv	55-30	7	
5 (12/1995)	Spider-Gtv	55-30	11	
3 (3/1995)	Spider-Gtv	55-30	17	
5 (12/1995)	Spider-Gtv	55-30	18	

(continued)

UPDATE CARD

(continued)

UPDATE CARD				
UPDATE. (DATE)	MODEL	SECTION	PAGE	
			SUBSTITUTED	ADDED
5 (12/1995)	Spider-Gtv	55-A1	2 to 4	
5 (12/1995)	Spider-Gtv	55-A2	2 to 3	
5 (12/1995)	Spider-Gtv	55-A2	6	
5 (12/1995)	Spider-Gtv	55-A2		6/1
5 (12/1995)	Spider-Gtv	55-A2	7	
5 (12/1995)	Spider-Gtv	55-A2	10 to 16	
5 (12/1995)	Spider-Gtv	55-A2	19	
5 (12/1995)	Spider-Gtv	55-A2	23 to 24	
5 (12/1995)	Spider-Gtv	55-A2	26 to 28	
5 (12/1995)	Spider-Gtv	55-A2	30 to 33	
5 (12/1995)	Spider-Gtv	55-A2		33/1 to 33/4
5 (12/1995)	Spider-Gtv	55-A2	34 to 35	
5 (12/1995)	Spider-Gtv	55-A2		36/1 to 36/4
5 (12/1995)	Spider-Gtv	55-A2	37	
5 (12/1995)	Spider-Gtv	55-A2	40	
5 (12/1995)	Spider-Gtv	55-A2		40/1 to 40/2
5 (12/1995)	Spider-Gtv	55-A2	41 to 44	
5 (12/1995)	Spider-Gtv	55-A2	47 to 51	
3 (12/1995)	Spider-Gtv	55-A2	52	
3 (12/1995)	Spider-Gtv	55-A2	55	
3 (12/1995)	Spider-Gtv	55-A2	67	
5 (12/1995)	Spider-Gtv	55-A2	60	
3 (3/1995)	Gtv V6 TB	-	Index	
3 (3/1995)	Gtv V6 TB	55		1 to 8
3 (3/1995)	Gtv V6 TB	55-2		1 to 4
3 (3/1995)	Gtv V6 TB	55-3	1 to 2	
5 (12/1995)	Gtv V6 TB	55-3	3	
3 (3/1995)	Gtv V6 TB	55-3		4
3 (3/1995)	Gtv V6 TB	55-13	1	
3 (3/1995)	Gtv V6 TB	55-13		2 to 3
3 (3/1995)	Gtv V6 TB	55-13		4 to 5
3 (3/1995)	Gtv V6 TB	55-26	1	
5 (12/1995)	Gtv V6 TB	55-26	2 to 3	
3 (3/1995)	Gtv V6 TB	55-28	1	
3 (3/1995)	Gtv V6 TB	55-28		2 to 3
3 (3/1995)	Gtv V6 TB	55-30	1	
5 (12/1995)	Gtv V6 TB	55-30	2 to 4	
3 (3/1995)	Gtv V6 TB	55-30	5 to 6	
5 (12/1995)	Gtv V6 TB	55-30	7	
3 (3/1995)	Gtv V6 TB	55-30	8 to 10	
5 (12/1995)	Gtv V6 TB	55-30	11	
5 (12/1995)	Gtv V6 TB	55-30		12 to 16
5 (12/1995)	Gtv V6 TB	55-30	17	
3 (3/1995)	Gtv V6 TB	55-A1		1
3 (3/1995)	Gtv V6 TB	55-A1	2 to 3	
3 (3/1995)	Gtv V6 TB	55-A1		4
3 (3/1995)	Gtv V6 TB	55-A1		1
5 (12/1995)	Gtv V6 TB	55-A2	2 to 3	
3 (3/1995)	Gtv V6 TB	55-A2		4 to 9

Spider
Gtv

VOLUME III

REPAIR
INSTRUCTIONS

UPDATE CARD

UPDATE CARD

UPDATE (DATE)	MODEL	SECTION	PAGE	
			SUBST.	ADDED
6 (9/1996)	Spider-Gtv	-	Frontespice	
6 (9/1996)	Spider-Gtv	55	3	
6 (9/1996)	Spider-Gtv	55		5/1 to 5/6
6 (9/1996)	Spider-Gtv	55		10/1 to 10/6
3 (3/1995)	Spider-Gtv	55	42	
6 (9/1996)	Spider-Gtv	55	I	
6 (9/1996)	Spider-Gtv	55	II	
5 (12/1995)	Spider-Gtv	55-I	9	
3 (3/1995)	Spider-Gtv	55-1	2	
6 (9/1996)	Spider-Gtv	55-1	4	
5 (12/1995)	Spider-Gtv	55-1	6	
6 (9/1996)	Spider-Gtv	55-2	3	
6 (9/1996)	Spider-Gtv	55-2	5	
5 (12/1995)	Spider-Gtv	55-2	6 to 7	
5 (12/1995)	Spider-Gtv	55-2	9	
5 (12/1995)	Spider-Gtv	55-3	2	
6 (9/1996)	Spider-Gtv	55-3	3	
6 (9/1996)	Spider-Gtv	55-3	5 to 6	
5 (12/1995)	Spider-Gtv	55-3	7 to 9	
5 (12/1995)	Spider-Gtv	55-3	11	
6 (9/1996)	Spider-Gtv	55-3	14	
5 (12/1995)	Spider-Gtv	55-3	15	
5 (12/1995)	Spider-Gtv	55-3		16
3 (3/1995)	Spider-Gtv	55-4	4	
5 (12/1995)	Spider-Gtv	55-8	2	
5 (12/1995)	Spider-Gtv	55-8	5	
5 (12/1995)	Spider-Gtv	55-13	6 to 7	
5 (12/1995)	Spider-Gtv	55-13	12 to 13	
5 (12/1995)	Spider-Gtv	55-14	2 to 3	
5 (12/1995)	Spider-Gtv	55-14	6 to 8	
5 (12/1995)	Spider-Gtv	55-15	2	
5 (12/1995)	Spider-Gtv	55-15	4	
6 (9/1996)	Spider-Gtv	55-16	1	
5 (12/1995)	Spider-Gtv	55-16	8	
5 (12/1995)	Spider-Gtv	55-16	10	
5 (12/1995)	Spider-Gtv	55-18	2	
5 (12/1995)	Spider-Gtv	55-18		2/1 to 2/2
5 (12/1995)	Spider-Gtv	55-18	3	
5 (12/1995)	Spider-Gtv	55-18A	1 to 9	
5 (12/1995)	Spider-Gtv	55-18A		10 to 17
6 (9/1996)	Spider-Gtv	55-23	1	
6 (9/1996)	Spider-Gtv	55-23	3 to 20	
6 (9/1996)	Spider-Gtv	55-26	3	
6 (9/1996)	Spider-Gtv	55-26	6 to 7	
6 (9/1996)	Spider-Gtv	55-26		7/1 to 7/2
6 (9/1996)	Spider-Gtv	55-26	8	
6 (9/1996)	Spider-Gtv	55-26	10	
6 (9/1996)	Spider-Gtv	55-26		10/1 to 10/4
6 (9/1996)	Spider-Gtv	55-26	11 to 13	
6 (9/1996)	Spider-Gtv	55-26	15 to 17	
6 (9/1996)	Spider-Gtv	55-27	2	
6 (9/1996)	Spider-Gtv	55-27		2/1 to 2/2
6 (9/1996)	Spider-Gtv	55-27	3 to 4	
3 (3/1995)	Spider-Gtv	55-28	1 to 2	

UPDATE CARD

UPDATE (DATE)	MODEL	SECTION	PAGE	
			SUBST.	ADDED
6 (9/1996)	Spider-Gtv	55-28	7 to 8	
3 (3/1995)	Spider-Gtv	55-28	15	
6 (9/1996)	Spider-Gtv	55-28	16	
6 (9/1996)	Spider-Gtv	55-28		16/1 to 16/2
6 (9/1996)	Spider-Gtv	55-28	17	
5 (12/1995)	Spider-Gtv	55-28	18	
6 (9/1996)	Spider-Gtv	55-29	1	
5 (3/1995)	Spider-Gtv	55-29	2 to 4	
5 (12/1995)	Spider-Gtv	55-29	7	
3 (3/1995)	Spider-Gtv	55-29	8	
5 (12/1995)	Spider-Gtv	55-29	11	
5 (12/1995)	Spider-Gtv	55-29	17a 18	
6 (9/1996)	Spider-Gtv	55-29A		1 to 18
3 (3/1995)	Spider-Gtv	55-30	1	
5 (12/1995)	Spider-Gtv	55-30	2 to 3	
5 (12/1995)	Spider-Gtv	55-30	7	
5 (12/1995)	Spider-Gtv	55-30	11	
3 (3/1995)	Spider-Gtv	55-30	17	
5 (12/1995)	Spider-Gtv	55-30	18	
5 (12/1995)	Spider-Gtv	55-A1	2 to 4	
6 (9/1996)	Spider-Gtv	55-A2	2	
5 (12/1995)	Spider-Gtv	55-A2	3	
5 (12/1995)	Spider-Gtv	55-A2	6	
5 (12/1995)	Spider-Gtv	55-A2		6/1
5 (12/1995)	Spider-Gtv	55-A2	7	
5 (12/1995)	Spider-Gtv	55-A2	10	
6 (9/1996)	Spider-Gtv	55-A2	11	
5 (12/1995)	Spider-Gtv	55-A2	12 to 16	
5 (12/1995)	Spider-Gtv	55-A2	19	
6 (9/1996)	Spider-Gtv	55-A2	21 to 23	
5 (12/1995)	Spider-Gtv	55-A2	24	
6 (9/1996)	Spider-Gtv	55-A2	26 to 28	
6 (9/1996)	Spider-Gtv	55-A2		28/1 to 28/2
6 (9/1996)	Spider-Gtv	55-A2	29 to 30	
5 (12/1995)	Spider-Gtv	55-A2	31	
6 (9/1996)	Spider-Gtv	55-A2	32 to 33	
5 (12/1995)	Spider-Gtv	55-A2		33/1 to 33/4
5 (12/1995)	Spider-Gtv	55-A2	34 to 35	
6 (9/1996)	Spider-Gtv	55-A2	36	
6 (9/1996)	Spider-Gtv	55-A2		36/1 to 36/4
5 (12/1995)	Spider-Gtv	55-A2	37	
6 (9/1996)	Spider-Gtv	55-A2	39	
5 (12/1995)	Spider-Gtv	55-A2	40	
5 (12/1995)	Spider-Gtv	55-A2		40/1 to 40/2
5 (12/1995)	Spider-Gtv	55-A2	41 to 43	
6 (9/1996)	Spider-Gtv	55-A2	44	
6 (9/1996)	Spider-Gtv	55-A2		44/1 to 44/2
5 (12/1995)	Spider-Gtv	55-A2	47	
6 (9/1996)	Spider-Gtv	55-A2	48	
6 (9/1996)	Spider-Gtv	55-A2		48/1 to 48/2
6 (9/1996)	Spider-Gtv	55-A2	49 to 54	
6 (9/1996)	Spider-Gtv	55-A2		54/1 to 54/2
6 (9/1996)	Spider-Gtv	55-A2	55 to 60	

Spider
Gtv
VOLUME III
REPAIR
INSTRUCTIONS

UPDATE CARD

UPDATE CARD				
UPDATE (DATE)	MODEL	SECTION	PAGE	
			SUBST.	ADDED
3 (3/1995)	Gtv V6 TB	-		
3 (3/1995)	Gtv V6 TB	55		1 to 8
3 (3/1995)	Gtv V6 TB	55-2		1 to 4
3 (3/1995)	Gtv V6 TB	55-3	1 to 2	
5 (12/1995)	Gtv V6 TB	55-3	3	
3 (3/1995)	Gtv V6 TB	55-3		4
3 (3/1995)	Gtv V6 TB	55-13	1	
3 (3/1995)	Gtv V6 TB	55-13		2 to 3
3 (3/1995)	Gtv V6 TB	55-13		4 to 5
3 (3/1995)	Gtv V6 TB	55-26	1	
5 (12/1995)	Gtv V6 TB	55-26	2 to 3	
3 (3/1995)	Gtv V6 TB	55-28	1	
3 (3/1995)	Gtv V6 TB	55-28		2 to 3
3 (3/1995)	Gtv V6 TB	55-30	1	
5 (12/1995)	Gtv V6 TB	55-30	2 to 4	
3 (3/1995)	Gtv V6 TB	55-30	5 to 6	
5 (12/1995)	Gtv V6 TB	55-30	7	
3 (3/1995)	Gtv V6 TB	55-30	8 to 10	
5 (12/1995)	Gtv V6 TB	55-30	11	
5 (12/1995)	Gtv V6 TB	55-30		12 to 16
5 (12/1995)	Gtv V6 TB	55-30	17	
3 (3/1995)	Gtv V6 TB	55-A1		1
3 (3/1995)	Gtv V6 TB	55-A1	2 to 3	
3 (3/1995)	Gtv V6 TB	55-A1		4
3 (3/1995)	Gtv V6 TB	55-A1		1
5 (12/1995)	Gtv V6 TB	55-A2	2 to 3	
3 (3/1995)	Gtv V6 TB	55-A2		4 to 9
6 (9/1996)	Gtv 3.0V6	-		
6 (9/1996)	Gtv 3.0V6	55		1 to 13
6 (9/1996)	Gtv 3.0V6	55-1		1 to 3
6 (9/1996)	Gtv 3.0V6	55-2		1 to 4
6 (9/1996)	Gtv 3.0V6	55-3		1 to 6
6 (9/1996)	Gtv 3.0V6	55-10		1 to 3
6 (9/1996)	Gtv 3.0V6	55-13		1 to 5
6 (9/1996)	Gtv 3.0V6	55-26		1 to 12
6 (9/1996)	Gtv 3.0V6	55-27		1 to 4
6 (9/1996)	Gtv 3.0V6	55-28		1 to 3
6 (9/1996)	Gtv 3.0V6	55-30		1 to 17
6 (9/1996)	Gtv 3.0V6	55-A1		1 to 4
6 (9/1996)	Gtv 3.0V6	55-A2		1 to 12

UPDATE CARD

Spider
Gtv
VOLUME III

REPAIR
INSTRUCTIONS

UPDATE CARD				
UPDATE (DATE)	MODEL	SECTION	PAGE	
			SUBST.	ADDED
		VOLUME III		
7 (4/1997)	Spider-Gtv	-	Frontespice	
6 (9/1996)	Spider-Gtv	55	3	
6 (9/1996)	Spider-Gtv	55		5/1 to 5/6
6 (9/1996)	Spider-Gtv	55		10/1 to 10/6
7 (4/1997)	Spider-Gtv	55	25	
7 (4/1997)	Spider-Gtv	55	37 to 38	
3 (3/1995)	Spider-Gtv	55	42	
7 (4/1997)	Spider-Gtv	55	43 to 44	
6 (9/1996)	Spider-Gtv	55	Index I	
6 (9/1996)	Spider-Gtv	55	Index II	
5 (12/1995)	Spider-Gtv	55-I	9	
3 (3/1995)	Spider-Gtv	55-1	2	
6 (9/1996)	Spider-Gtv	55-1	4	
5 (12/1995)	Spider-Gtv	55-1	6	
6 (9/1996)	Spider-Gtv	55-2	3	
6 (9/1996)	Spider-Gtv	55-2	5	
5 (12/1995)	Spider-Gtv	55-2	6 to 7	
5 (12/1995)	Spider-Gtv	55-2	9	
5 (12/1995)	Spider-Gtv	55-3	2	
6 (9/1996)	Spider-Gtv	55-3	3	
6 (9/1996)	Spider-Gtv	55-3	5 to 6	
5 (12/1995)	Spider-Gtv	55-3	7 to 9	
5 (12/1995)	Spider-Gtv	55-3	11	
6 (9/1996)	Spider-Gtv	55-3	14	
5 (12/1995)	Spider-Gtv	55-3	15	
5 (12/1995)	Spider-Gtv	55-3		16
3 (3/1995)	Spider-Gtv	55-4	4	
5 (12/1995)	Spider-Gtv	55-8	2	
5 (12/1995)	Spider-Gtv	55-8	5	
5 (12/1995)	Spider-Gtv	55-13	6 to 7	
5 (12/1995)	Spider-Gtv	55-13	12 to 13	
5 (12/1995)	Spider-Gtv	55-14	2 to 3	
5 (12/1995)	Spider-Gtv	55-14	6 to 8	
5 (12/1995)	Spider-Gtv	55-15	2	
5 (12/1995)	Spider-Gtv	55-15	4	
6 (9/1996)	Spider-Gtv	55-16	1	
5 (12/1995)	Spider-Gtv	55-16	8	
5 (12/1995)	Spider-Gtv	55-16	10	
5 (12/1995)	Spider-Gtv	55-18	2	
5 (12/1995)	Spider-Gtv	55-18		2/1 to 2/2
5 (12/1995)	Spider-Gtv	55-18	3	
5 (12/1995)	Spider-Gtv	55-18A	1 to 9	
5 (12/1995)	Spider-Gtv	55-18A		10 to 17
6 (9/1996)	Spider-Gtv	55-23	1	
6 (9/1996)	Spider-Gtv	55-23	3 to 20	
6 (9/1996)	Spider-Gtv	55-26	3	
6 (9/1996)	Spider-Gtv	55-26	6 to 7	
6 (9/1996)	Spider-Gtv	55-26		7/1 to 7/2
6 (9/1996)	Spider-Gtv	55-26	8	
6 (9/1996)	Spider-Gtv	55-26	10	
6 (9/1996)	Spider-Gtv	55-26		10/1 to 10/4
6 (9/1996)	Spider-Gtv	55-26	11 to 13	
6 (9/1996)	Spider-Gtv	55-26	15 to 17	

UPDATE CARD				
UPDATE (DATE)	MODEL	SECTION	PAGE	
			SUBST.	ADDED
6 (9/1996)	Spider-Gtv	55-28	7 to 8	
3 (3/1995)	Spider-Gtv	55-28	15	
6 (9/1996)	Spider-Gtv	55-28	16	
6 (9/1996)	Spider-Gtv	55-28		16/1 to 16/2
6 (9/1996)	Spider-Gtv	55-28	17	
5 (12/1995)	Spider-Gtv	55-28	18	
6 (9/1996)	Spider-Gtv	55-29	1	
5 (3/1995)	Spider-Gtv	55-29	2 to 4	
5 (12/1995)	Spider-Gtv	55-29	7	
3 (3/1995)	Spider-Gtv	55-29	8	
5 (12/1995)	Spider-Gtv	55-29	11	
5 (12/1995)	Spider-Gtv	55-29	17a 18	
6 (9/1996)	Spider-Gtv	55-29A		1 to 18
3 (3/1995)	Spider-Gtv	55-30	1	
5 (12/1995)	Spider-Gtv	55-30	2 to 3	
5 (12/1995)	Spider-Gtv	55-30	7	
5 (12/1995)	Spider-Gtv	55-30	11	
3 (3/1995)	Spider-Gtv	55-30	17	
5 (12/1995)	Spider-Gtv	55-30	18	
5 (12/1995)	Spider-Gtv	55-A1	2 to 4	
6 (9/1996)	Spider-Gtv	55-A2	2	
5 (12/1995)	Spider-Gtv	55-A2	3	
5 (12/1995)	Spider-Gtv	55-A2	6	
5 (12/1995)	Spider-Gtv	55-A2		6/1
5 (12/1995)	Spider-Gtv	55-A2	7	
5 (12/1995)	Spider-Gtv	55-A2	10	
6 (9/1996)	Spider-Gtv	55-A2	11	
5 (12/1995)	Spider-Gtv	55-A2	12 to 16	
5 (12/1995)	Spider-Gtv	55-A2	19	
6 (9/1996)	Spider-Gtv	55-A2	21 to 23	
5 (12/1995)	Spider-Gtv	55-A2	24	
6 (9/1996)	Spider-Gtv	55-A2	26 to 28	
6 (9/1996)	Spider-Gtv	55-A2		28/1 to 28/2
6 (9/1996)	Spider-Gtv	55-A2	29 to 30	
5 (12/1995)	Spider-Gtv	55-A2	31	
6 (9/1996)	Spider-Gtv	55-A2	32 to 33	
5 (12/1995)	Spider-Gtv	55-A2		33/1 to 33/4
5 (12/1995)	Spider-Gtv	55-A2	34 to 35	
6 (9/1996)	Spider-Gtv	55-A2	36	
6 (9/1996)	Spider-Gtv	55-A2		36/1 to 36/4
5 (12/1995)	Spider-Gtv	55-A2	37	
6 (9/1996)	Spider-Gtv	55-A2	39	
5 (12/1995)	Spider-Gtv	55-A2	40	
5 (12/1995)	Spider-Gtv	55-A2		40/1 to 40/2
5 (12/1995)	Spider-Gtv	55-A2	41 to 43	
6 (9/1996)	Spider-Gtv	55-A2	44	
6 (9/1996)	Spider-Gtv	55-A2		44/1 to 44/2
5 (12/1995)	Spider-Gtv	55-A2	47	
6 (9/1996)	Spider-Gtv	55-A2	48	
6 (9/1996)	Spider-Gtv	55-A2		48/1 to 48/2
6 (9/1996)	Spider-Gtv	55-A2	49 to 54	
6 (9/1996)	Spider-Gtv	55-A2		54/1 to 54/2
6 (9/1996)	Spider-Gtv	55-A2	55 to 60	

(continued)

UPDATE CARD

Spider
Gtv
VOLUME III
REPAIR
INSTRUCTIONS

(continued)

UPDATE CARD				
UPDATE (DATE)	MODEL	SECTION	PAGE	
			SUBST.	ADDED
3 (3/1995)	Gtv V6 TB	-	Index	
3 (3/1995)	Gtv V6 TB	55		1 to 8
3 (3/1995)	Gtv V6 TB	55-2		1 to 4
3 (3/1995)	Gtv V6 TB	55-3	1 to 2	
5 (12/1995)	Gtv V6 TB	55-3	3	
3 (3/1995)	Gtv V6 TB	55-3		4
3 (3/1995)	Gtv V6 TB	55-13	1	
3 (3/1995)	Gtv V6 TB	55-13		2 to 3
3 (3/1995)	Gtv V6 TB	55-13		4 to 5
3 (3/1995)	Gtv V6 TB	55-26	1	
5 (12/1995)	Gtv V6 TB	55-26	2 to 3	
3 (3/1995)	Gtv V6 TB	55-28	1	
3 (3/1995)	Gtv V6 TB	55-28		2 to 3
3 (3/1995)	Gtv V6 TB	55-30	1	
5 (12/1995)	Gtv V6 TB	55-30	2 to 4	
3 (3/1995)	Gtv V6 TB	55-30	5 to 6	
5 (12/1995)	Gtv V6 TB	55-30	7	
3 (3/1995)	Gtv V6 TB	55-30	8 to 10	
5 (12/1995)	Gtv V6 TB	55-30	11	
5 (12/1995)	Gtv V6 TB	55-30		12 to 16
5 (12/1995)	Gtv V6 TB	55-30	17	
3 (3/1995)	Gtv V6 TB	55-A1		1
3 (3/1995)	Gtv V6 TB	55-A1	2 to 3	
3 (3/1995)	Gtv V6 TB	55-A1		4
3 (3/1995)	Gtv V6 TB	55-A1		1
5 (12/1995)	Gtv V6 TB	55-A2	2 to 3	
3 (3/1995)	Gtv V6 TB	55-A2		4 to 9
6 (9/1996)	Gtv 3.0V6	-		Index
6 (9/1996)	Gtv 3.0V6	55		1 to 13
6 (9/1996)	Gtv 3.0V6	55-1		1 to 3
6 (9/1996)	Gtv 3.0V6	55-2		1 to 4
6 (9/1996)	Gtv 3.0V6	55-3		1 to 6
6 (9/1996)	Gtv 3.0V6	55-10		1 to 3
6 (9/1996)	Gtv 3.0V6	55-13		1 to 5
6 (9/1996)	Gtv 3.0V6	55-26		1 to 12
6 (9/1996)	Gtv 3.0V6	55-27		1 to 4
6 (9/1996)	Gtv 3.0V6	55-28		1 to 3
6 (9/1996)	Gtv 3.0V6	55-30		1 to 17
6 (9/1996)	Gtv 3.0V6	55-A1		1 to 4
6 (9/1996)	Gtv 3.0V6	55-A2		1 to 12
	VOLUME III SECTION II			
7 (4/1997)	Spider-Gtv	-		Frontespice
7 (4/1997)	Spider-Gtv	-		Index
7 (4/1997)	Spider-Gtv	55-1		1 to 6
7 (4/1997)	Spider-Gtv	55-2		1 to 13
7 (4/1997)	Spider-Gtv	55-3		1 to 15
7 (4/1997)	Spider-Gtv	55-4		1 to 5
7 (4/1997)	Spider-Gtv	55-5		1 to 4
7 (4/1997)	Spider-Gtv	55-6		1 to 5
7 (4/1997)	Spider-Gtv	55-7		1 to 6

UPDATE CARD				
UPDATE (DATE)	MODEL	SECTION	PAGE	
			SUBST.	ADDED
7 (4/1997)	Spider-Gtv	55-8		1 to 6
7 (4/1997)	Spider-Gtv	55-9		1 to 6
7 (4/1997)	Spider-Gtv	55-10		1 to 4
7 (4/1997)	Spider-Gtv	55-11		1 to 5
7 (4/1997)	Spider-Gtv	55-12		1 to 7
7 (4/1997)	Spider-Gtv	55-13		1 to 16
7 (4/1997)	Spider-Gtv	55-14		1 to 8
7 (4/1997)	Spider-Gtv	55-15		1 to 6
7 (4/1997)	Spider-Gtv	55-17		1 to 5
7 (4/1997)	Spider-Gtv	55-18		1 to 6
7 (4/1997)	Spider-Gtv	55-18A		1 to 17
7 (4/1997)	Spider-Gtv	55-19		1 to 6
7 (4/1997)	Spider-Gtv	55-20		1 to 8
7 (4/1997)	Spider-Gtv	55-21		1 to 5
7 (4/1997)	Spider-Gtv	55-23		1 to 16
7 (4/1997)	Spider-Gtv	55-24		1 to 4
7 (4/1997)	Spider-Gtv	55-25		1 to 6
7 (4/1997)	Spider-Gtv	55-26		1 to 28
7 (4/1997)	Spider-Gtv	55-27		1 to 8
7 (4/1997)	Spider-Gtv	55-28		1 to 24
7 (4/1997)	Spider-Gtv	55-29A		1 to 17
7 (4/1997)	Spider-Gtv	55-29B		1 to 18
7 (4/1997)	Spider-Gtv	55-29C		1 to 17
7 (4/1997)	Spider-Gtv	55-29D		1 to 18
7 (4/1997)	Spider-Gtv	55-31		1 to 11
7 (4/1997)	Spider-Gtv	55-A1		1 to 4
7 (4/1997)	Spider-Gtv	55-A2		1 to 78

INTRODUCTION

The "Spider-Gtv - Repair Instructions" Manual is composed of three volumes as follows:

Volume I	- Technical Data;
	- Engines;
	- Mechanical Groups.
Volume II	- Heating-Ventilation;
	- Bodywork.
Volume III	- Electric system;
	- Electrical system diagnosis.

For overhauling engines and mechanical groups refere to the following manuals:

- PA493600000000 REPAIR INSTRUCTIONS - ENGINE OVERHAUL.
- PA494200000000 REPAIR INSTRUCTIONS - OVERHAULING MECHANICAL GROUPS.

In order to facilitate consultation, the structure of the manual mirrors the functional groups already defined for the "Repair Flat-rate Manual" in use by Alfa Romeo Authorized Service Network.

The characteristic data and the tables for vehicles identification are contained in the "Technical Data" at the beginning of Volume I.

The "Model identification" tables should be consulted before carrying out repair work in order to identify the model of the vehicle, the engine size and the groups which form the vehicle.

How to use this manual

The aim of this manual is to supply the Alfa Romeo Service Personnel with a tool enabling them to rapidly identify faults and to render the corrective interventions precise and efficient.

The manual shows the procedures relative to the removal and refitting and dismontling operations and the checks relative to the various groups forming the vehicle.

The procedures are illustrated in detail as are the procedures for using the tools. An appropriate symbology and explanatory texts next to the fundamental technical drawings make a complete and rapid consultation of the manual possible.

The procedures illustrate complete component disassembly procedures and should only be carried out in their entirety when absolutely unavoidable. The procedures for "assembly" and "refitting" are normally obtained by reversing the procedure followed for disassembly or removal in reverse and only the reassembly procedures which are significantly different are illustrated.

For information relative to the electrical systems onboard the vehicle refer to section 55 "ELECTRIC SYSTEM" and to the successive 55 "ELECTRIC SYSTEM DIAGNOSIS" which gives the wiring diagrams and the description of each function, the connector tables, the location of the components, the tables for fault diagnosis and the technical data for checking the components.

All the information contained in this manual is updaded at the time of publication.

Alfa Romeo reserves the right to make any modifications to its products that it deems necessary without warning. However the technical information and updates to this manual will be supplied as soon as possible.

Symbology

A specific symbology has been used in this manual to permit a rapid identification of the main technical information supplied.

The list of symbols is given below.

removal/disassembly
refitting/re-assembly
tighten to the torque
caulk nut
adjustment/regulation
visual check
lubricate
weight difference
angular value
pressure
temperature
brake system air purge
surfaces to be treated
interference
play
intake
exhaust
Lubricate only with engine oil
left-hand thread
torque for tightening in oil
engine r.p.m.
ovalization
taper
eccentricity
flatness
diameter
linear dimension
parallelism
service with grease
heating temperature
seal
service with engine oil
grease
CAUTION!
WARNING!

Warnings for the operator

All the operations must be carried out with the greatest care to prevent damage occurring to the vehicle or persons.

- The use of Alfa Romeo specific tools are indicated for some procedures. These tools must be used to ensure safety and to avoid damaging parts involved in the procedure.
- To free parts which are solidly stuck together, tap with an aluminium or lead mallet if the parts are of metal. Use a wooden or resin mallet for light alloy parts.
- When dismantling ensure parts are marked correctly if required.
- When refitting lubricate the parts, if necessary, to prevent seizing and binding during the initial period of operation.
- Using adhesive paper or clean rags cover those parts of the engine which, following disassembly, present openings which may allow dust or foreign material to enter.
- When refitting, the tightening torques and adjustment data must be respected.
- When substituting the main component(s) the seal rings, oil seals, flexible washers, safety plates, self-locking nuts and all worn parts must also be replaced.
- Avoid marking the internal coverings in the passenger compartment.

Substitution of groups or disconnected parts must be carried out using original spare parts only. Only in this way can the suitability and perfect operation of each organ be guaranteed.

- The words **CAUTION** and **WARNING** accompany those procedures where particular care should be taken to prevent damage occurring to people or vehicle parts.

☒ **CAUTION:**
used when insufficient care could cause damage to people

⚠ **WARNING:**
used when insufficient care could cause damage to the vehicle or its component parts.

- The safety regulations applied to workshops should be respected. Where necessary the manual also lists the specific precautions to be taken to prevent dangerous situations from arising.

☒ **When using chemical products follow the safety indications given on the safety cards which the supplier is obliged to deliver to the user (in Italy in compliance with D.M. n.46/1992).**

NOTE:
It is possible that for certain subjects were not completed in time for printing.
However these subjects are given and highlighted in the indices of the single groups.
It is the duty of the Technical Services to supply documentation regarding these subjects as soon as possible through updates or "Technical Bulletins".

ELECTRIC SYSTEM

55

INDEX

IGNITION COILS (1970 c.c. Engine)

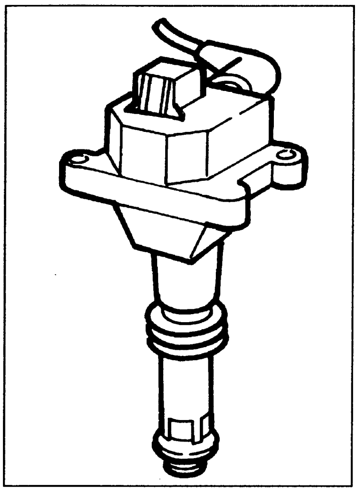

The ignition system includes two spark plugs per cylinder in an asymmetrical position which differ in size.
This static distribution system with lost spark has four coils, each of which supplies the spark plug of the cylinder below and simultaneously that of the paired cylinder (1-4) (2-3).
This system is a sophisticated evolution of the T.Spark ignition system.
T.Spark ignition, originally developed with two distributors (75 - 164), has been improved with more advanced injection systems which comprise static ignition (155 - 164 Super).
This new system offers further advantages, such as:
- limited high voltage cable routing thereby achieving increased reliability and lowering electrical interferences;
- the position and length of the cables makes it impossible to invert the connection of the cables to the corresponding spark plugs during servicing operations.

REMOVAL/REFITTING

- Disconnect the battery (-) terminal.
1. Slacken the fastening screws and remove the ignition coils cover.
2. Disconnect the electrical connections from the ignition coils.

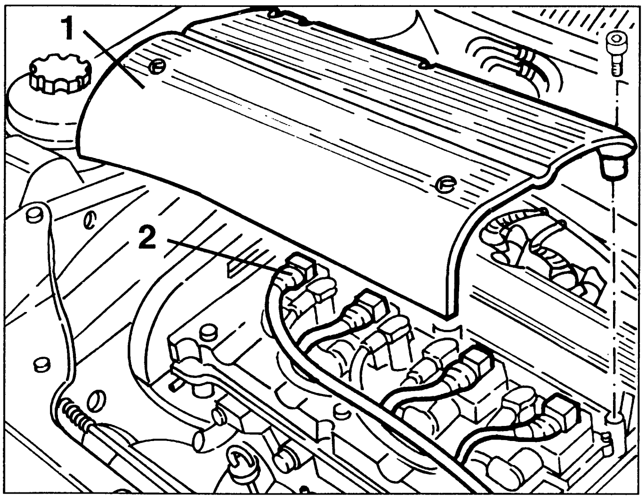

1. Remove the high voltage cables.
2. Slacken the fastening screws and remove the ignition coils.
- If necessary, slacken the fastening screws and remove the ignition coil support bracket.

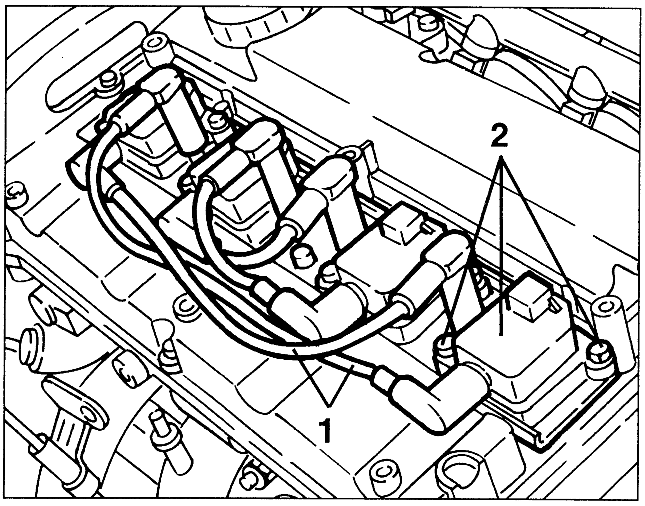

CHECKS AND INSPECTIONS

- Check that the ignition coil characteristics are within the specified limits. If not, change the coils.

Specifications	
Primary winding resistance	0,3 Ω ± 12%
Secondary winding resistance	7k Ω ± 12%

IGNITION COILS (2959 c.c. Engine)

This ignition system with static distribution and lost spark has three coils.
This solution makes it possible to eliminate rotary components and does not produce sparks, thus reducing the risk of interferences; it also reduces the number of high voltage cables and connections as the power modules for controlling the primary windings of the coil are located inside the control unit.
The paired cylinders in this engine are 1-5, 6-2 and 3-4.

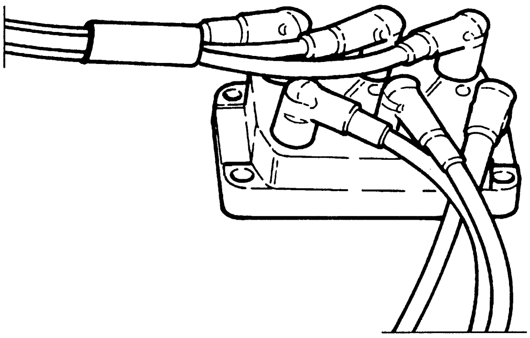

REMOVAL/REFITTING

- Disconnect the battery (-) terminal.

1. Disconnect the high voltage cables from the ignition coils.

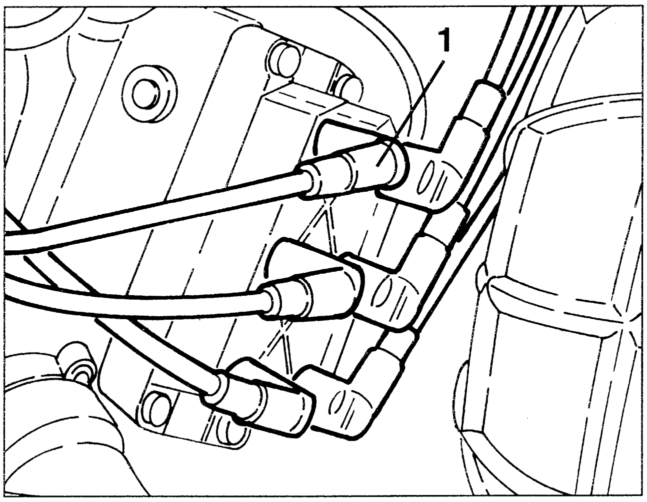

1. Disconnect the electrical connection from the ignition coils.
2. Slacken the four fastening screws and remove the ignition coils.

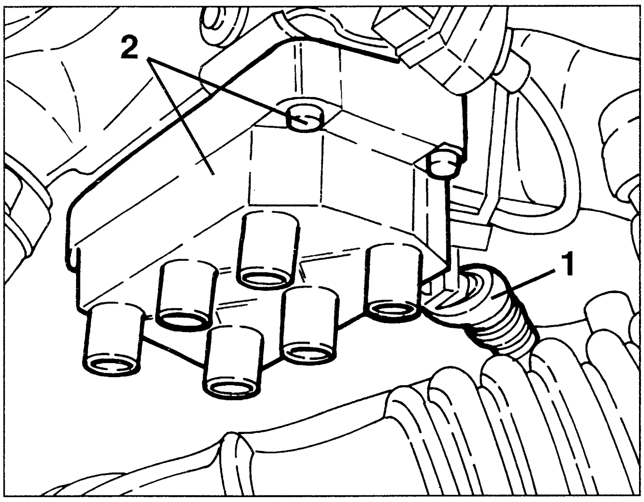

CHECKS AND INSPECTIONS

Check that the ignition coil characteristics are within the specified limits. If not, change the coils.

Specifications	
Primary winding resistance	0,5 Ω
Secondary winding resistance	13,3 kΩ

SPARK PLUGS (1970 c.c. Engine)

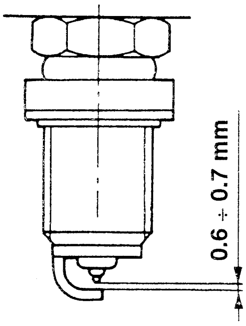

The standard spark plugs are of the type with surface discharge with one point and a centre electrode.

In order to operate correctly a precise gap must be maintained between the electrodes.

The spark plugs are positioned asymmetrically in the bursting chamber and they differ in size as shown in the following diagram.

CENTRE SPARK PLUGS (LARGE) - M14

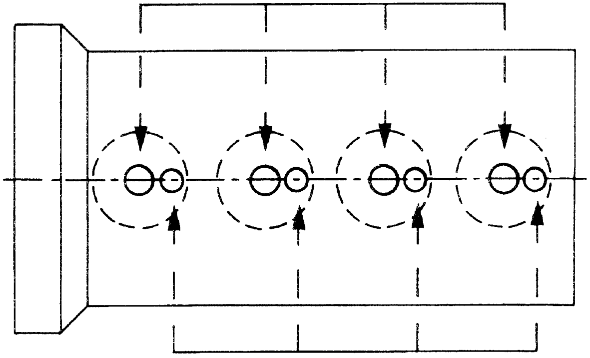

SIDE SPARK PLUGS (SMALL) - M10

Firing order
1 - 3 - 4 - 2

CHECKING AND REPLACEMENT

- With the engine cold, remove the spark plugs blowing inside to remove any traces of dirt.
- Check for dirt or breaks on the ceramic insulation. In which case change the spark plugs.

CAUTION:
The use of spark plugs of a different type or size than those specified can cause serious damage to the engine and alter the level of harmful emissions at the exhaust.

CAUTION:
A dirty or burnt out spark plug is often symptomatic of a fault in the engine supply system. For example:

- **Traces of carbon powder: incorrect mixture, air cleaner very dirty;**
- **Oil stains: oil seepage from the piston rings;**
- **Formation of ash: presence of aluminium material, especially in the oil;**

- **Melted electrodes: overheating due to unsuitable combustion, valve defects;**
- **Highly worn electrode: damaging additives in the fuel or oil, pinging or overheating;**
- **Etc.**

- When fitting, tighten the spark plugs to the following torque:

Centre spark plugs (large)	25 ÷ 35 Nm 2.6 ÷ 3.6 kgm
Side spark plugs (small)	10 ÷ 12 Nm 1 ÷ 1.2 kgm

SPARK PLUGS (2959 c.c. Engine)

The standard spark plugs are of the type with surface discharge with four peripheral points and one centre electrode.
In order to operate correctly, a precise gap must be maintained between the peripheral points and the centre electrode.

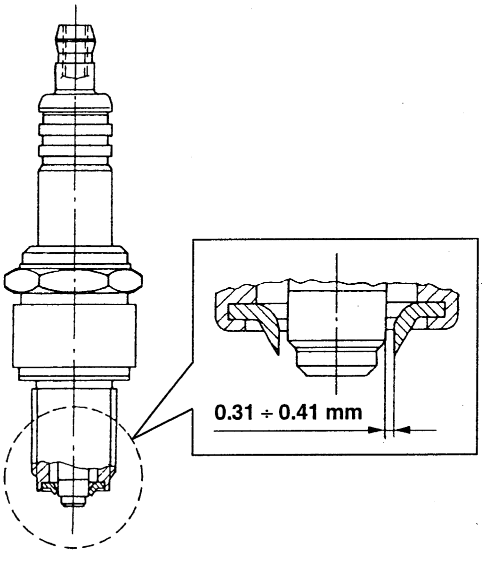

Firing order
1 - 4 - 2 - 5 - 3 - 6

CHECKING AND REPLACEMENT

- With the engine cold, remove the spark plugs blowing inside to remove any traces of dirt.
- Check for dirt or breaks on the ceramic insulation. In which case change the spark plugs.

CAUTION:
The use of spark plugs of a different type or size than those specified can cause serious damage to the engine and alter the level of harmful emissions at the exhaust.

CAUTION:
A dirty or burnt out spark plug is often symptomatic of a fault in the engine supply system. For example:

- **Traces of carbon powder: incorrect mixture, air cleaner very dirty;**
- **Oil stains: oil seepage from the piston rings;**
- **Formation of ash: presence of aluminium material, especially in the oil;**
- **Melted electrodes: overheating due to unsuitable combustion, valve defects;**
- **Highly worn electrode: damaging additives in the fuel or oil, pinging or overheating;**
- **Etc.**

- When fitting, tighten the spark plugs to the following torque:

27 ÷ 34 Nm 2.8 ÷ 3.5 kgm

STARTER MOTOR

Overcoming the inertia and frictions the starter motor cranks the engine to set a number of revolutions in order to begin the formation of the mixture necessary for combustion and subsequent autonomous movement of the engine.
The motion is transmitted by a direct current electric motor, powered by the battery, through a coupling pinion which turns the ring gear on the flywheel.

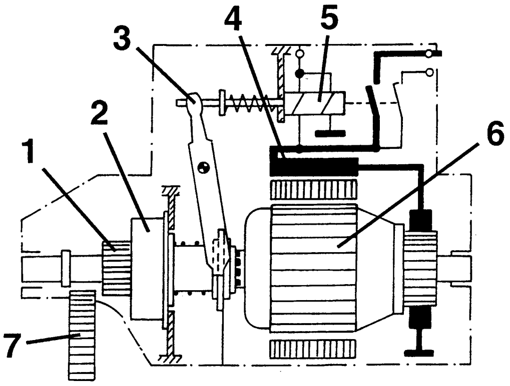

1. Pinion
2. Roller type freewheel
3. Coupling lever
4. Excitation coil
5. Relay
6. Rotor
7. Flywheel ring gear

Due to a freewheel coupling, the pinion disengages when the main engine turns faster than the motor.
A relay energized by the motor current engages the pinion through a fork.
The starter motor installed is of the translating screw pinion type, with relay housed directly above the starter motor.

REMOVAL/REFITTING (1970 c.c. Engine)

- Set the car on a lift.
- Disconnect the battery (-) terminal.

1. Disconnect the electrical connections of the lambda sensor.

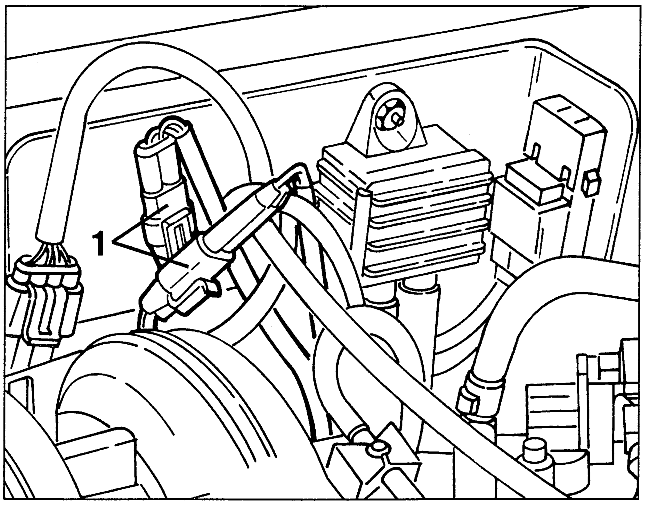

1. Remove the reinforcement bracket.
2. Remove the front section of the exhaust pipe complete with lambda sensor after slacken the fastenings.

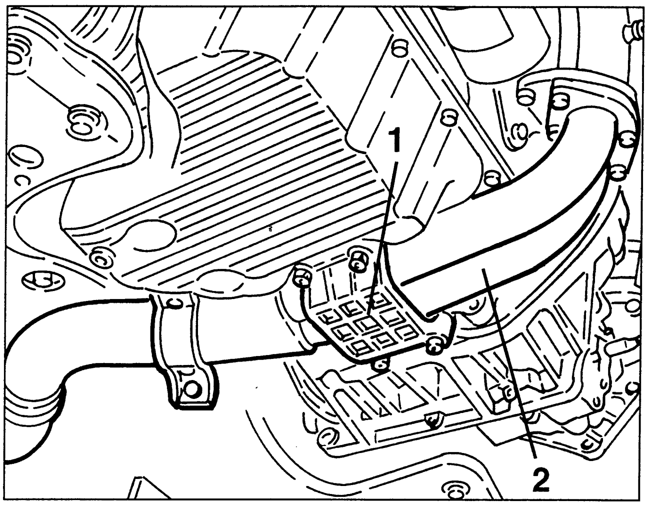

1. Slacken the screws fastening the power steering box to the suspension crossmember.

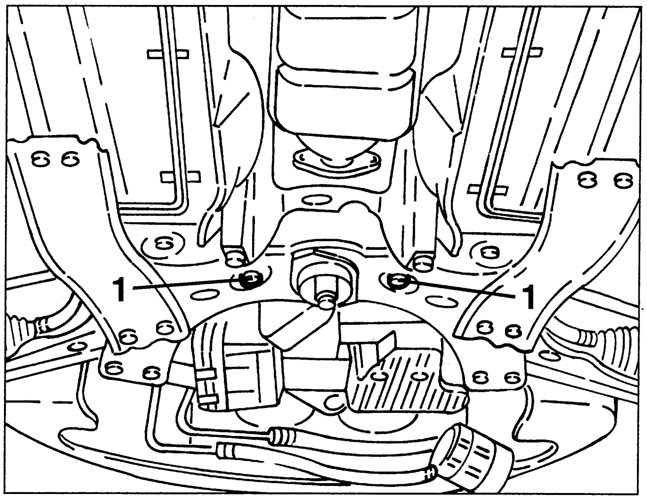

1. Disconnect the electrical connections from the starter motor.
2. Slacken the three fastening screws and remove the starter motor.

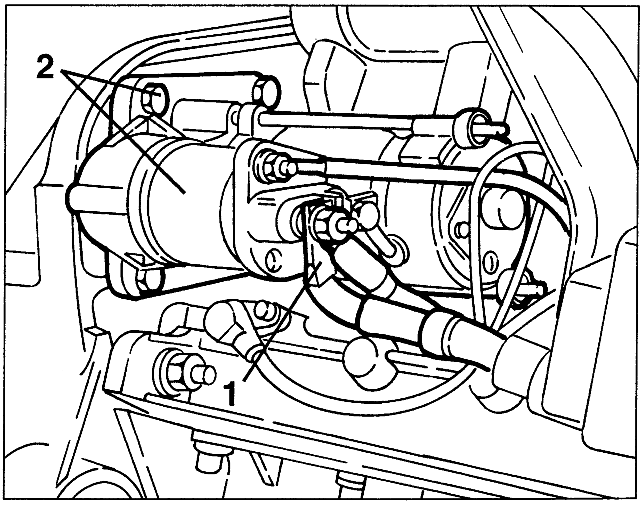

REMOVAL/REFITTING
(2959 c.c. Engine)

- Set the car on a lift.
- Disconnect the battery (-) terminal.

1. Raise the car and remove the front section of the exhaust pipe after slackening the fastenings.

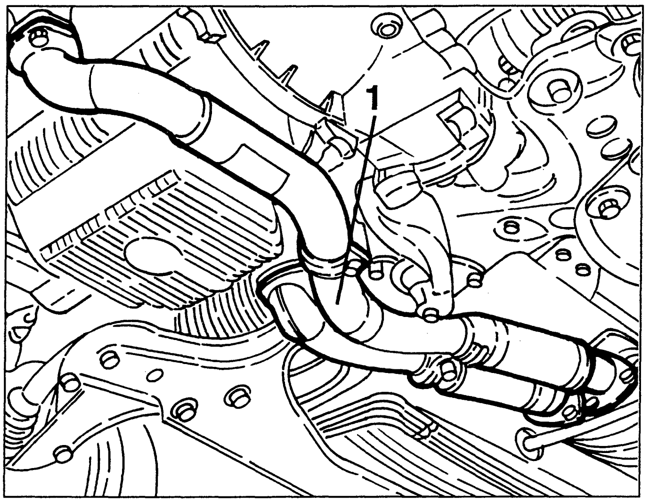

1. Disconnect the exhaust gas takeoff pipe for the E.G.R. valve from the manifold.

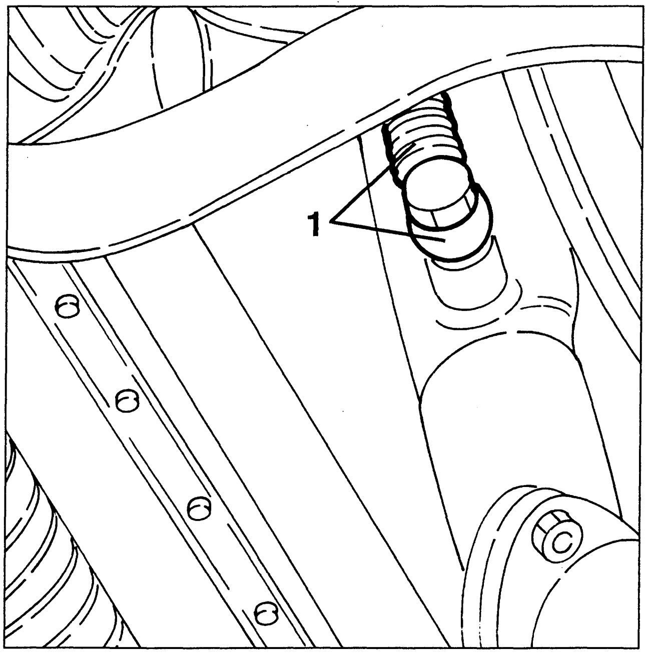

- Lower the car.

1. Disconnect the modulated vacuum pipe leading from the solenoid valve from the E.G.R. valve.
2. Slacken the two fastening nuts and remove the E.G.R. valve complete with exhaust gas takeoff pipe.

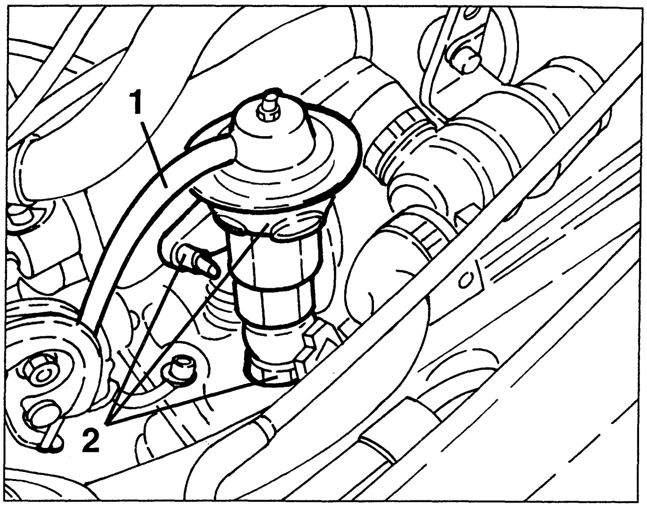

- Remove the seal.

1. Slacken the nuts fastening the exhaust manifold to the right-hand cylinder head.
2. Retrieve the starter motor heat shields.

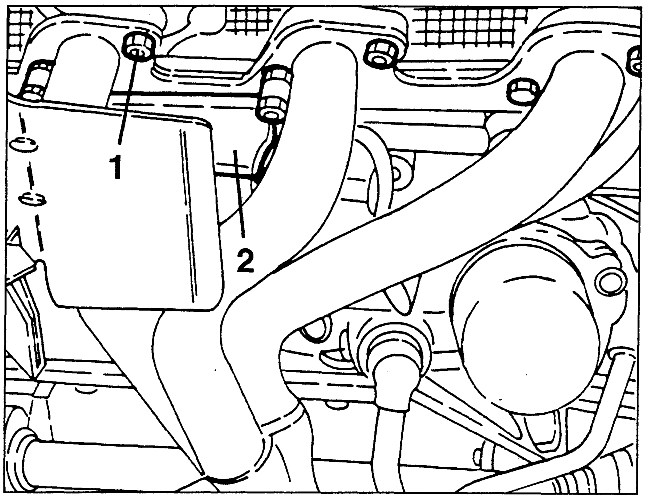

1. Disconnect the electrical connections from the starter motor.
2. Raise the car, move the exhaust manifold to one side, then slacken the three fastening screws and remove the starter motor, bringing it out from under the car.

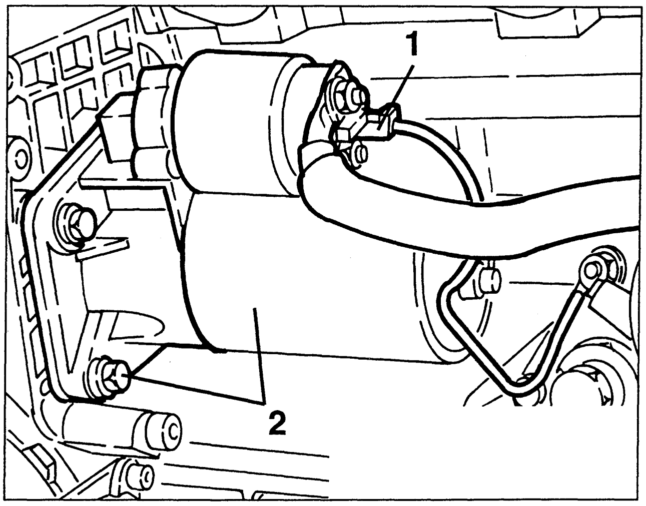

DIS-ASSEMBLY
(2959 c.c. Engine)

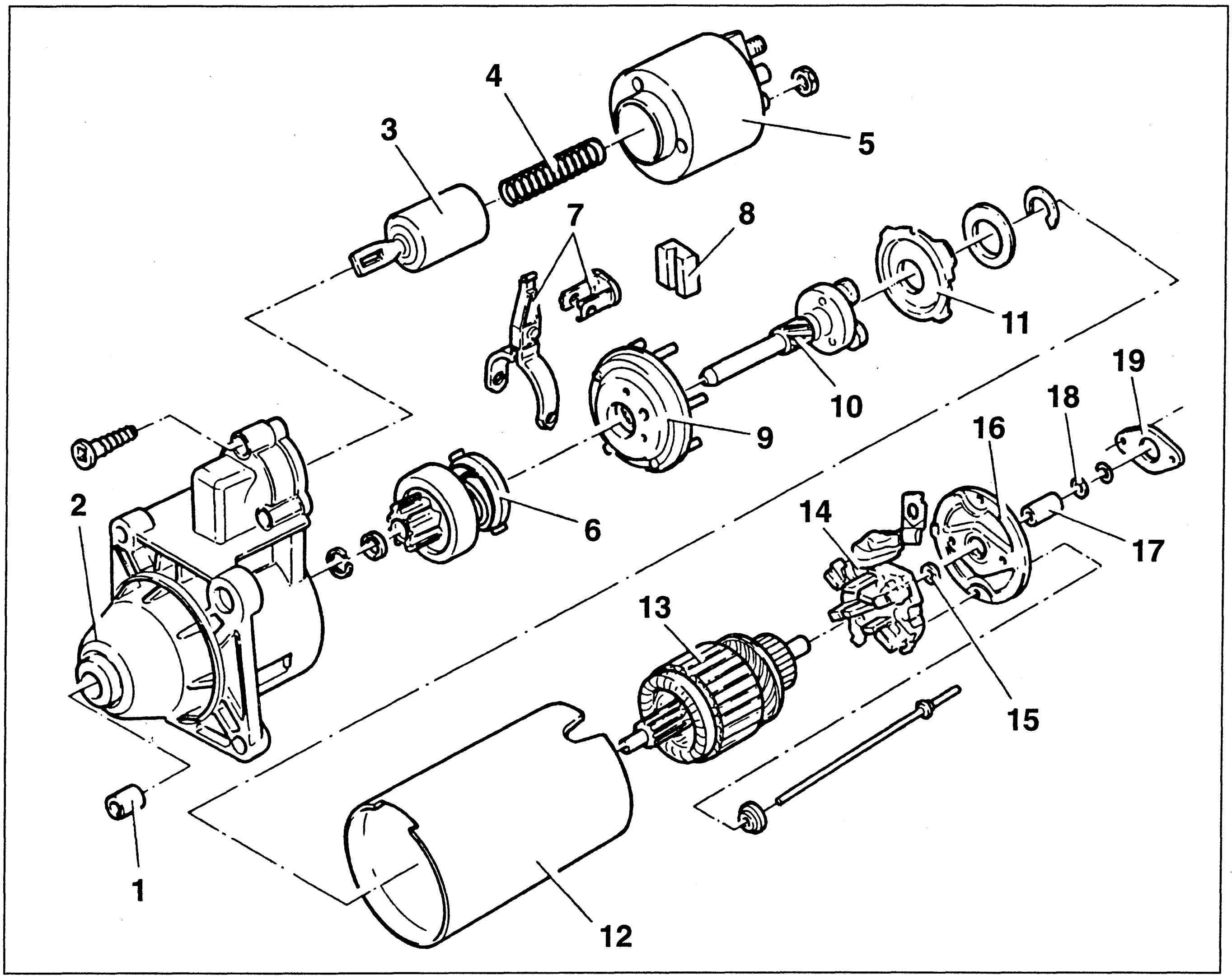

1. *Bush*
2. *Support on drive side*
3. *Coupling relay rotor*
4. *Return spring*
5. *Coupling relay*
6. *Starting coupling*
7. *Fork levers*
8. *Rubber pad*
9. *Differential bcontrol gear*
10. *Inverter*
11. *Protection plate*
12. *Pole frame*
13. *Rotor*
14. *Brush holder plate*
15. *Felt ring*
16. *Collector side support*
17. *Bush*
18. *Compensation washer*
19. *Dust guard*

CAUTION:
Because of their structure these starter motors are more sensitive to knocks, blows and squashing than the previous versions.
Consequently, thay must be fastened only locking them in the clamp on the flange (not on the pole frame).

1. Fasten the starter motor on a vice with protective clamps as shown in the figure.
2. Slacken the nut fastening the terminal to thecoupling relay.

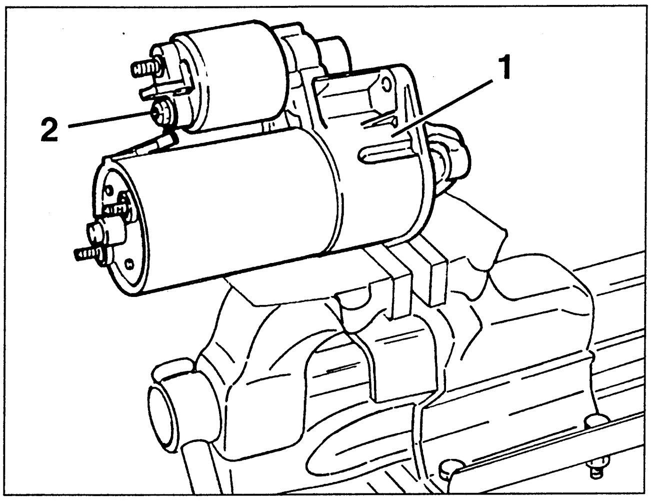

1. Slacken the three screws fastening the coupling relay to the drive side support.
2. Remove the coupling relay.
3. Retrieve the return spring.
4. Remove the coupling relay rotor.

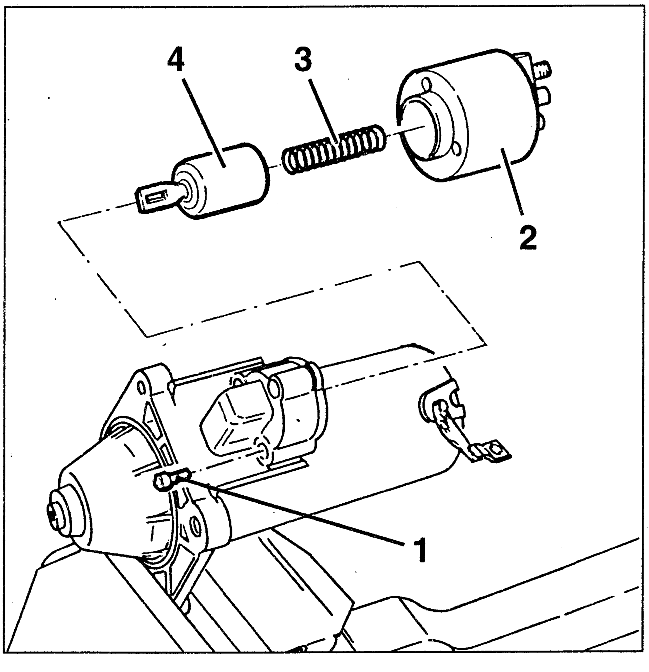

1. Slacken the two screws fastening the dust cover without removing them.
2. Slacken and renove the two thru screws.

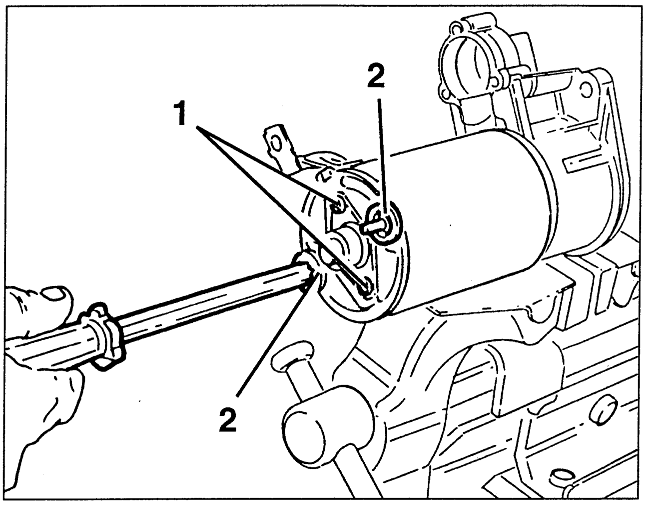

1. Remove the pole frame complete with rotor and collector side support.
2. Press the rotor carefully from the pole frame and at the same time push the seal out of the clamp.

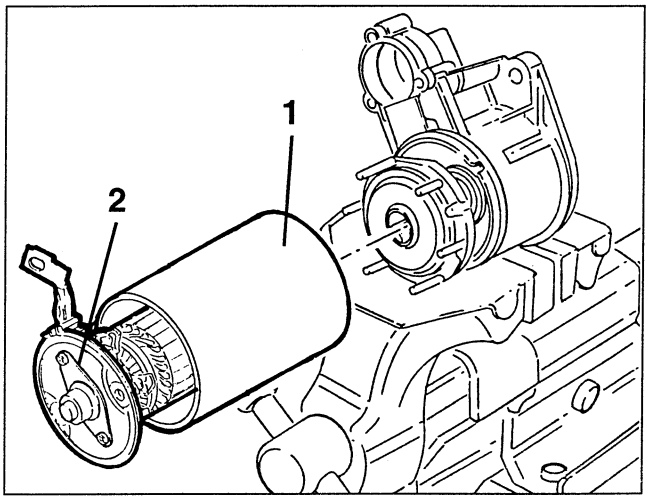

1. Completely slacken the fastening. screws and remove the dust guard.
2. Remove the rest and compensation washers.
3. Remove the collector side support.

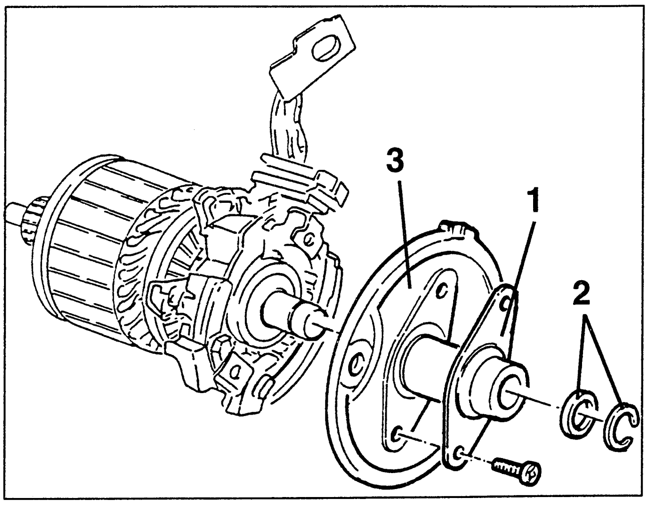

1. Remove the brush holder plate from the rotor.
2. Remove the felt seal.

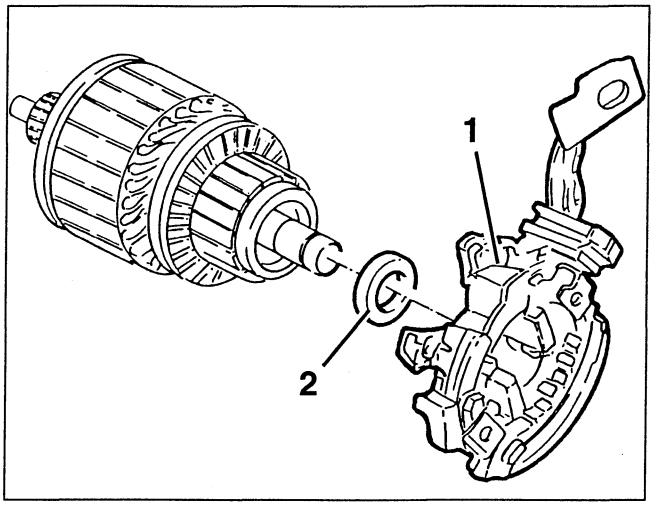

- Remove the rubber pad using a screwdriver.

1. From the drive side support remove the spur gear with transmission and fork levers.

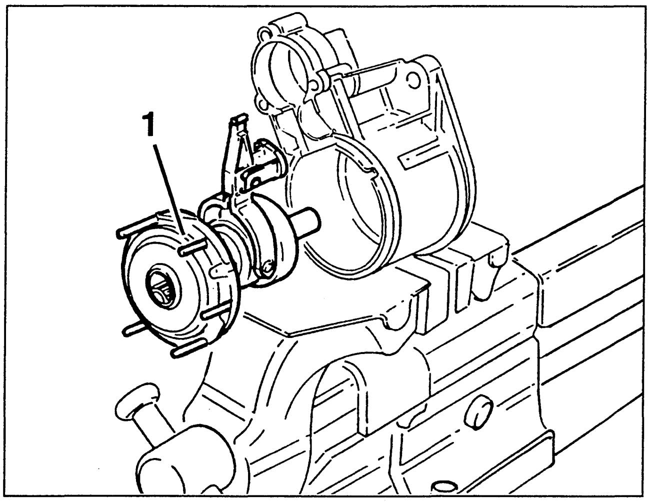

1. Hammer the starter coupling stop ring with a suitable bush and rubber mallet.

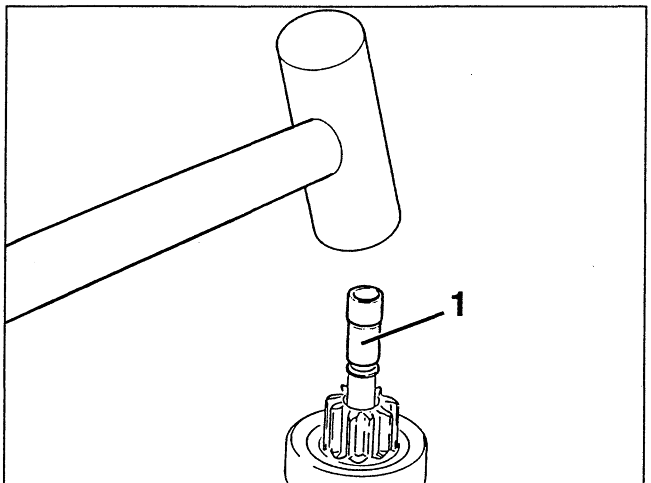

1. Using suitable pliers remove the split ring.
2. Remove the stop ring.
3. Remove the starter coupling from the reversing shaft.

CAUTION:
Avoid damaging the reversing shaft when removing the split ring.
If necessary, accurately deburr the reversing shaft groove, otherwise the gear bush will be damaged.

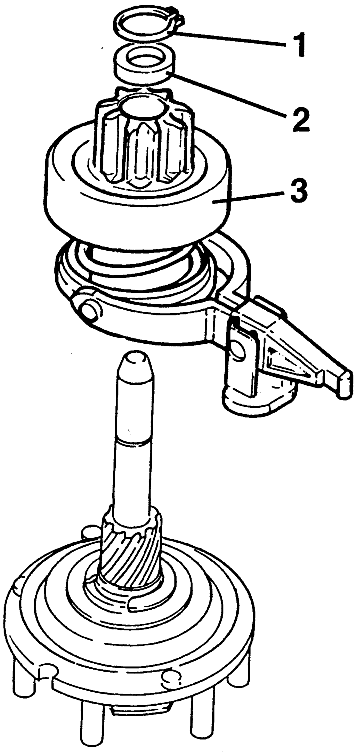

1. If necessary, remove the fork levers from the starter coupling.

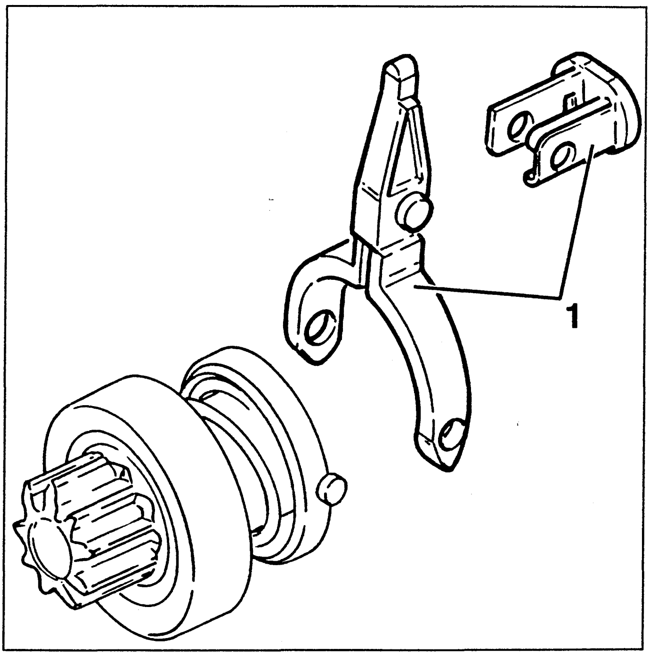

1. Remove the split ring fastening the reversing gear.

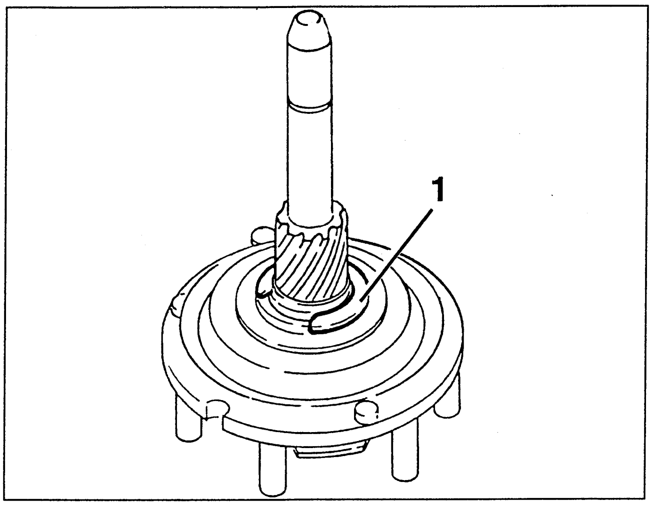

1. Remove the protection plate from the differential drive gear.

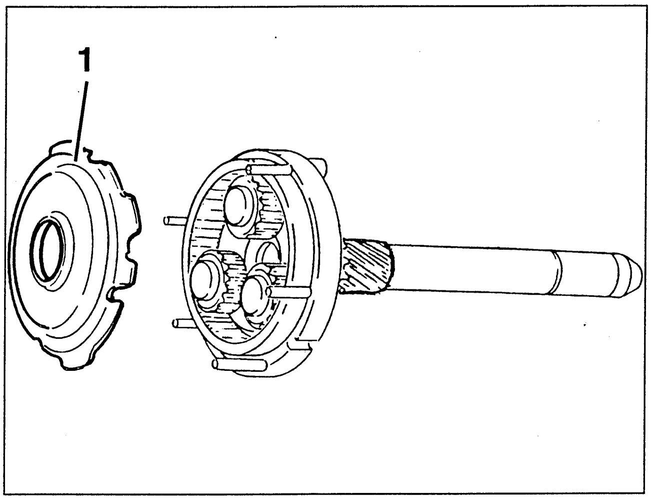

1. Separate the differential drive gear from the reversing gear.

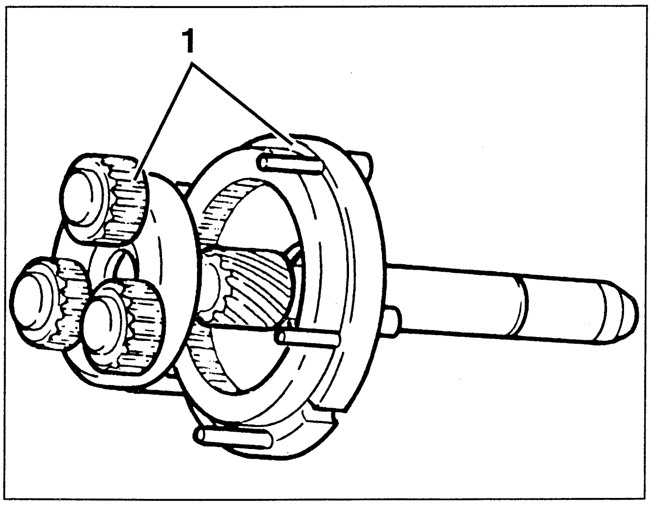

- If necessary, using special punches replace the bushes on the collector side support and drive side support.

CHECKS AND INSPECTIONS

- Clean the rotor, ring gear with internal teeth, the gear with transmission and the relay using only compressed air (max 4 bar) and a clean cloth. Never use liquid detergents. The other parts, such as for example screws and the rotor shaft may be washed with non inflammable liquid detergents to be found normally in commerce.

⚠ **CAUTION:**
Carefully dry any washed parts, otherwise they might form explosive gases inside the sealed starter motor.

Checking the outside of the collector

- Check for any worn points; if necessary, proceed as follows:
- Tighten the rotor on the collector side and drive side support taking care not to damage the rotor shaft.

⚠ **CAUTION:**
When turning do not tighten the rotor shaft in the chuck.

- Turn the collector using suitable tools ensuring that its diameter is within the specified measurements.

Ø

Minimum collector diameter
31.2 mm

- Also check that the eccentricity of the collector and of the pack of plates is within the specified values.

⌖

Collector eccentricity	≤ 0.01 mm
Eccentricity of pack of plates	≤ 0.05 mm

- If there are annealed points or interruptions on the collector, change the rotor.

Collector continuity test

- Place the tester prods on the collector blades and check that the tester indicates the passage of current. In the lack of continuity, change the rotor.
- Repeat the above-mentioned operations for all the corresponding pairs of blades.

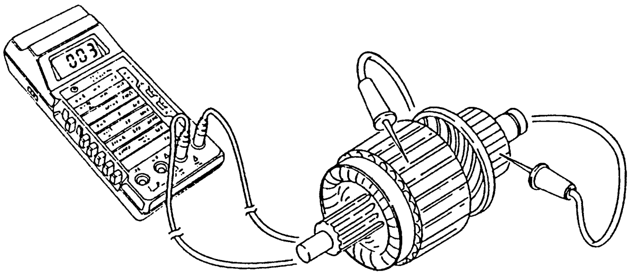

Rotor insulation test

- Place one tester prod on the collector and the other on the blade pack or on the shaft and check that the tester does not indicate the passage of current. If insulation is lacking (short circuit), change the rotor.
- Repeat the above-mentioned tests for all the collector blades.

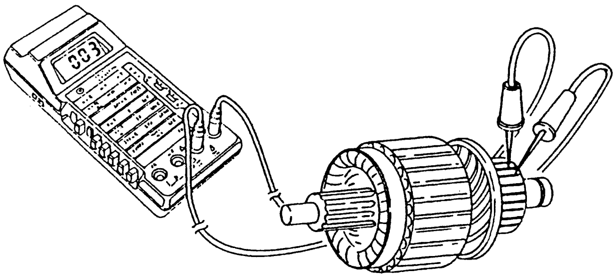

Checking brush wear

- To check the brushes, release the brush holder from its plate.
- Check that the length of the brushes is within the specified values and that they are not damaged; if necessary, change the whole brush holder plate.

Minimum brush length
L = 8 mm

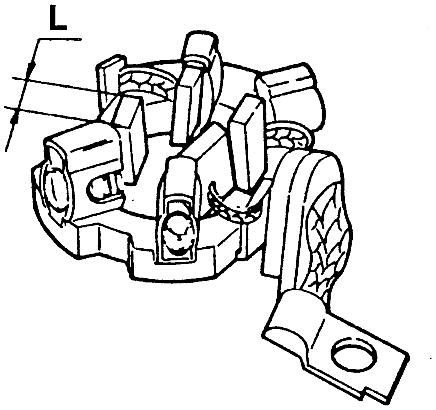

- Also check that the brush springs are not strained and are stiff enough to warrant good contact of the brushes on the collector.

Brush holder insulation test

- Connect one prod of the tester to the brush holder support plate and the other on a positive brush holder and check that the tester does not indicate the passage of current.
- Repeat the test for the other positive brush holder.
- If insulation is lacking, change the brush holder plate.

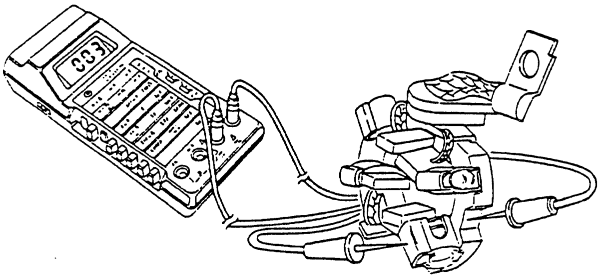

Checking the efficiency of the coupling relay

- Set the coupling relay on the test bench and power the bench surface negatively (alternatively connect the relay frame to the battery (-) terminal).
- Connect the positive terminal of the test bench or of the battery to the positive terminal of the short circuited relay with the starter pin.
- The prod of the coupling relay that actuates the starter control fork must be triggered; if not, change the electromagnet.

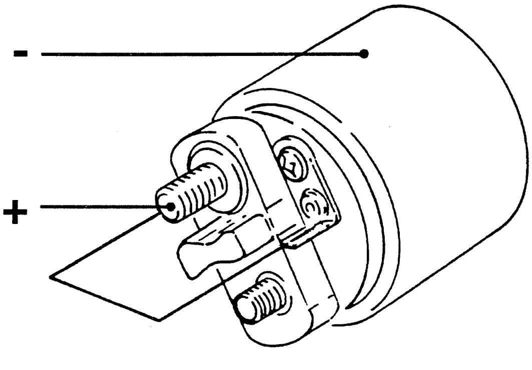

Checking the bush wear

- Check that the two bushes, the first one on the drive side support and the second on the collector side support are not excessively or unevenly worn.
- If necessary change them using special punches.

RE-ASSEMBLY

- Re-assemble the starter reversing the sequence followed for dis-assembly.
- Lubricate the components shown in the following figure with the products described.

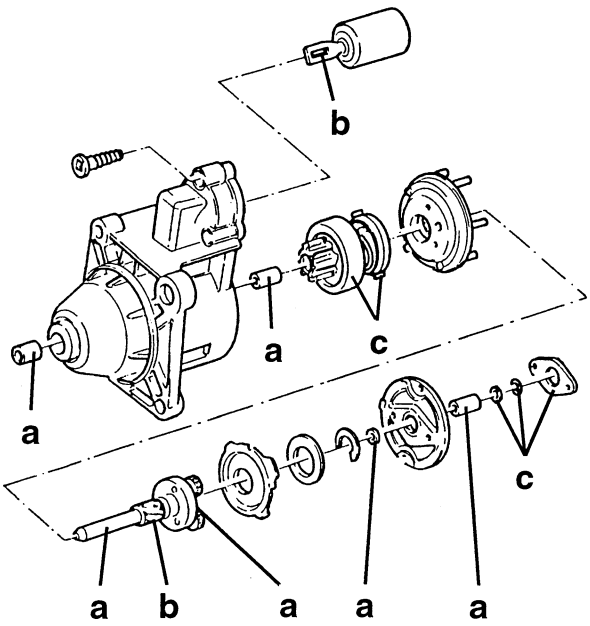

a. Oil
b. Grease
c. Silicone grease

BATTERY

The battery has been designed to ensure that the engine starts in the shortest time possible. For this reason a high torque and a predefined engine rpm are required. This is ensured by the optimal sizing of the 6 elements contained inside the battery, each of which delivers a voltage of ~ 2 V (12 V in all).
It maintains the charge much longer and also contains diluted sulphuric acid; for this reason it is necessary to keep it in the upright position even when it is not installed in the car. The battery body also has small ventilation holes to minimise the formation of gas during charging. Due to the reduction of the of gas produced, there is no corrosion and good contact at the terminals is ensured.
The advantages of this battery are:
- highly reduced water consumption due to the new type of alloy used in the manufacture of the grills and plates, for which reason topping up is no longer necessary;
- excellent starting capacity, as a result of very low self- discharging of up to seven months thus enabling long term storage (at temperatures below 28°C).

When the vehicle is travelling the alternator recharges the battery; whenever the charge is insufficient or the connection between the alternator and the battery is cut off, a warning light on the instrument cluster turns on to indicate a circuit failure.

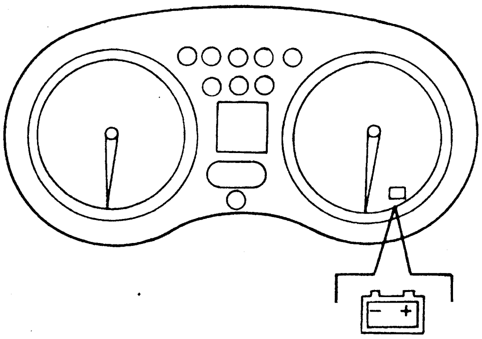

If the battery appears to be flat, check the charge measuring the loadless voltage on the terminals using a Voltmeter.
If the voltage is below 12.30 V it is 50% charged; if it reaches 12.48 V it is 75% charged; and at 12.66 V it is 100% charged.

CAUTION:
If the electrolyte level in one or more cells of the battery has fallen below the minimum mark on the plastic container, carefully open the cap cover and add distilled de-ionized water, as with ordinary batteries.

**NOTE: It is highly unadvisable to recharge the battery quickly at voltages above 15.5 V.
When recharging use a normal 12 V battery charger, connecting the positive cable (red) to the battery (+) terminal and the negative cable (black to the battery (-) terminal.
If the battery of the vehicle is connected temporarily to an external battery, connect the positive terminal to the positive terminal and the negative terminal to the negative terminal.**

CAUTION:
- Do not connect or disconnect the battery to or from the electrical system of the car when the engine is running.
- Do not invert the terminal connections (even for a moment) as this would damage the alternator rectifier.
- When connecting the battery charger to the battery, firstly connect the cables and then start the battery charger.
- If it becomes necessary to start the engine with temporary cables and with an auxiliary battery, the voltage of the latter must not exceed 12 V.
- Before recharging the battery the clamp should be removed from the negative terminal.
- When charging make sure that the temperature of the electrolyte does not exceed 45°C.
- Do not touch the positive and negative terminals at the same time with the hands.
- Keep all naked flames away from the battery when recharging.

When replacing the battery follow the directions for use.
If the charge of the replacement battery is potentially higher than that of the old one, the higher voltage might cause melting of the starter motor induction coil, or damage to the pinion or ring gear.

MAINTENANCE

The capacity of the battery to start the engine depends on the charge within it; it is therefore necessary to check it regularly and carry out any maintenance, especially in winter due to the greater load exerted on the starter motor and the reduced battery capacity at low temperatures.
Clean the surface of the battery, the terminals and clamps with a solution of water and sodium bicarbonate.
Before reconnecting the terminals, coat them with a layer of grease.

CAUTION:
Do not let any of the fluid used for cleaning get into the battery as it will react with the electrolyte. The electrolyte fluid is an acid, therefore dangerous for the eyes, hands and clothes.

NOTE:
Batteries stored in a warehouse or installed on cars left unused for long periods will slowly lose their charge, so it will be necessary to recharge them before use.

REMOVAL/REFITTING
(GTV)

- Working from the boot, remove the spare wheel and the luggage compartment front panel.

1. Firstly disconnect the battery (-) terminal and then the (+) terminal, then remove it after slackening the fastening clamp screw.

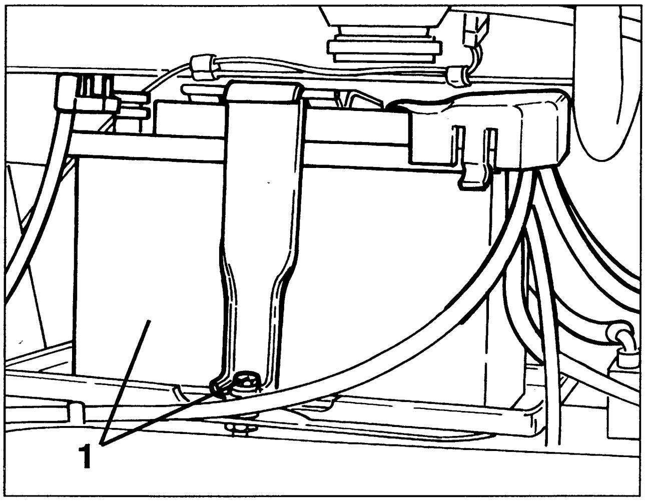

REMOVAL/REFITTING
(SPIDER)

- Working from the top, open the battery compartment cover.

1. Firstly disconnect the battery (-) terminal and then the (+) terminal, then remove it after slackening the fastening clamp screw.

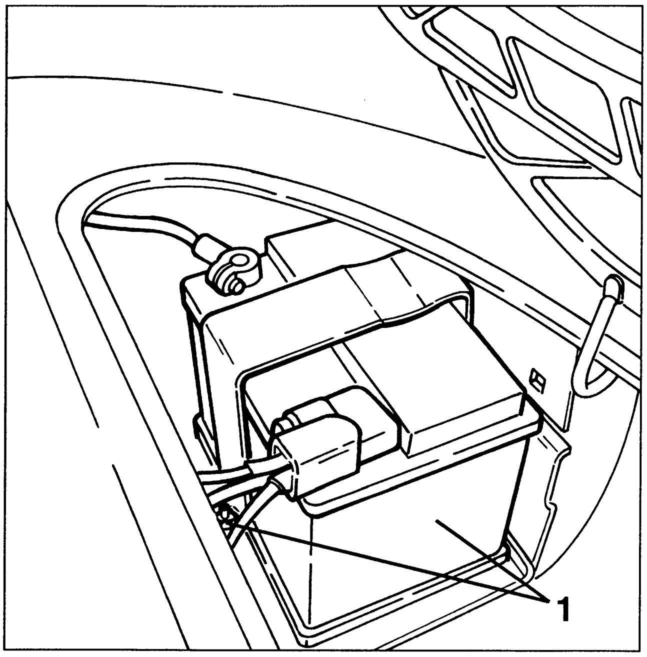

ALTERNATOR

When the engine is running the alternator supplies electrical energy to the electronic control units and to the various services which can be operated at all times.
It also charges the accumulator (battery), so that it can deliver current when the engine is stationary.
The electric current is produced by a stator which "cuts" the magnetic field generated by a rotary coil (rotor). The rotor is integral with a pulley operated directly by the crankshaft through a belt.
The contact brushes supply the rotor with the excitation current.
The alternate current generated by the alternator is rectified by the diodes and adjusted by the voltage regulator located on the alternator body.
The electronic voltage regulator used is compact in size and it warrants constant voltage in all fields of operation of the engine, regardless of the changes in load and rpm.
A cooling fan turns together with the pulley to prevent the alternator from reaching dangerous temperatures that might adversely affect its operation.
The alternator installed is of the type with claw terminals and collector rings; it is very light and compact.

CAUTION:
The fan will correctly cool the alternator if it turns clockwise (seen from pulley side).

REMOVAL/REFITTING
(1970 c.c. Engine)

- Set the car on a lift.
- Disconnect the battery (-) terminal.

1. Disconnect the lambda sensor electrical connections.

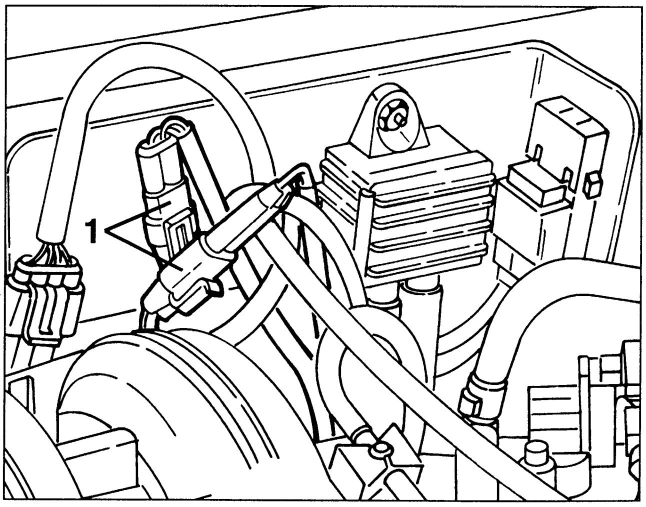

- Raise the car.
- Remove the right front wheel and mud flaps.

1. Working as shown on the guide pulley, slacken the tension of the auxiliary components drive pulley and remove it.

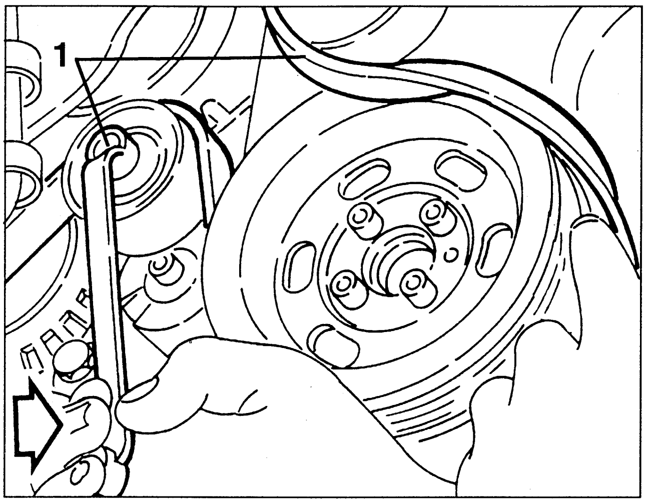

1. Remove the reinforcement bracket.
2. Remove the front section of the exhaust pipe complete with lambda sensor after slackening the fastenings.

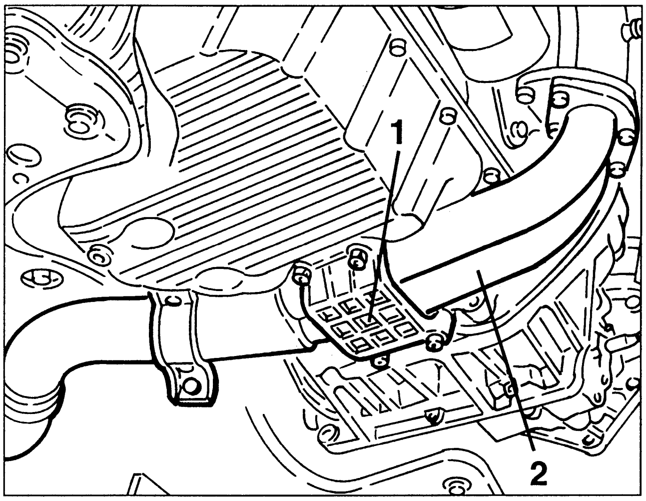

1. Set a hydraulic jack under the gearbox as illustrated.
2. Slacken the fastening screws and remove the rear power unit support.

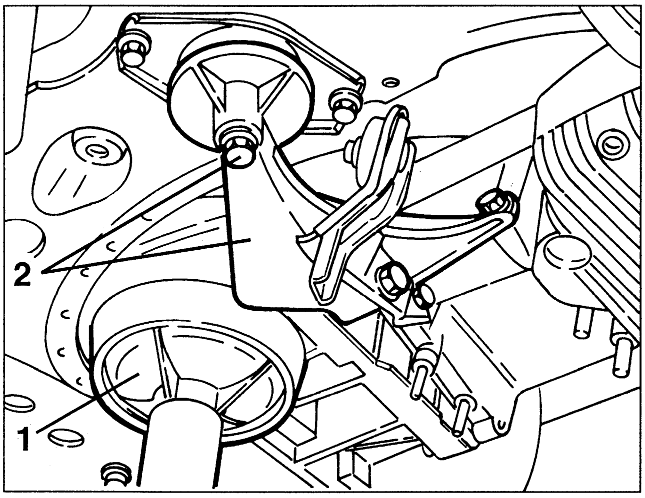

1. Slacken the screws fastening the power steering box to the suspension crossmember.

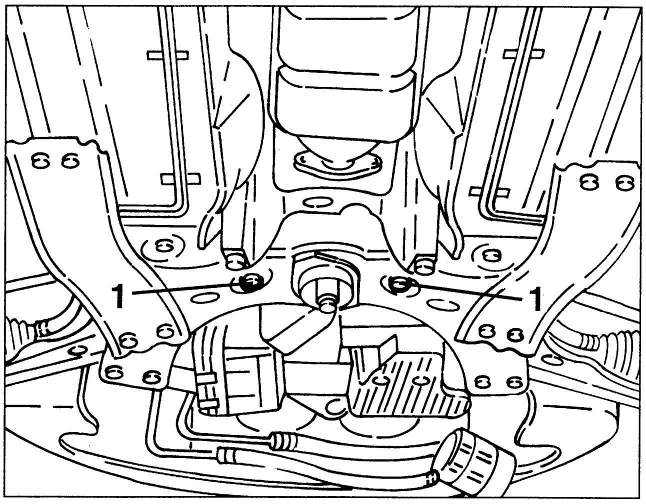

1. Disconnect the electrical connections from the alternator.

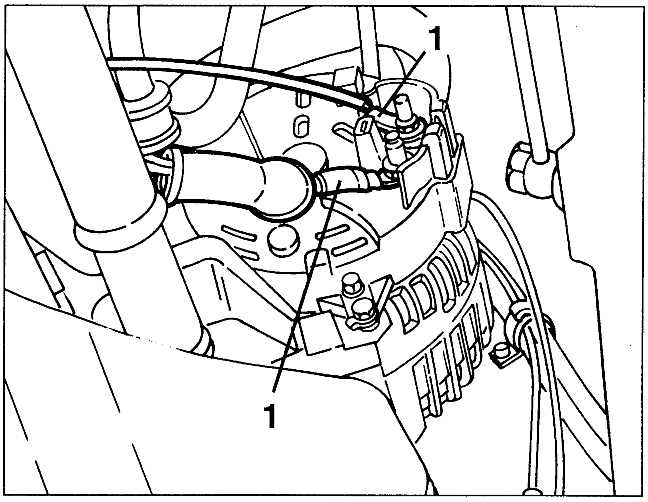

1. Slacken the two fastening bolts and remove the alternator retrieving it from under the car pulling it out of the opening obtained by removing the power unit rear support.

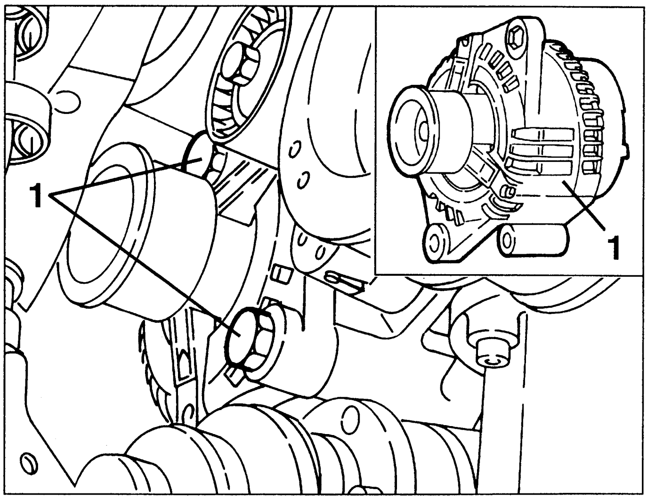

REMOVAL/REFITTING (2959 c.c. Engine)

- Set the car on a lift.
- Disconnect the battery (-) terminal.
- Remove the right front wheel and mud flaps.

1. Slacken the fastening screws and remove the engine stay rod.

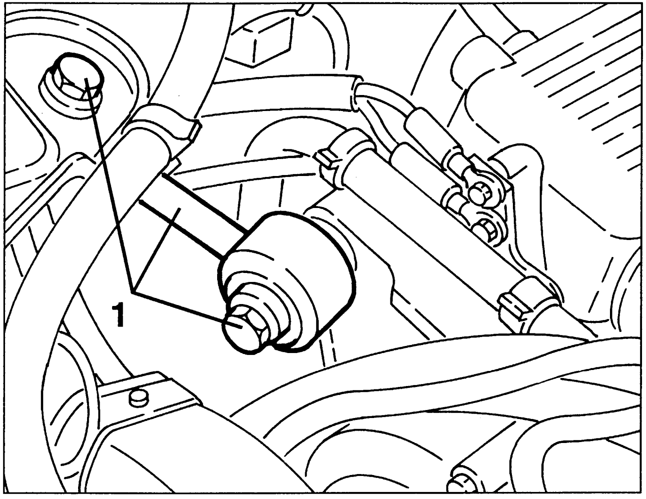

1. Disconnect the exhaust gas takeoff pipe from the E.G.R. valve.

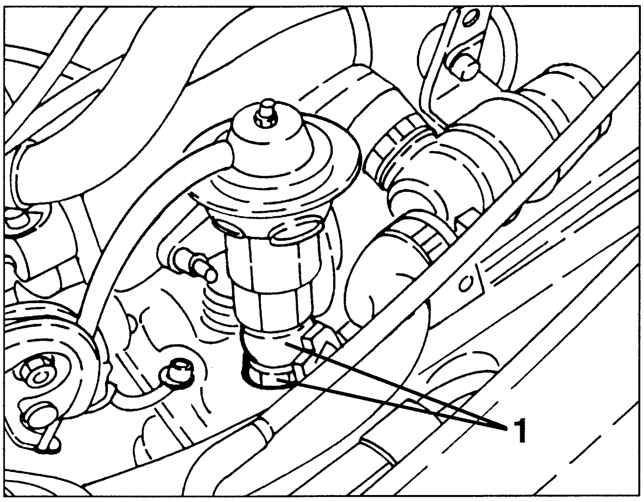

1. Raise the car and remove the front section of the exhaust pipe slackening the fastenings.

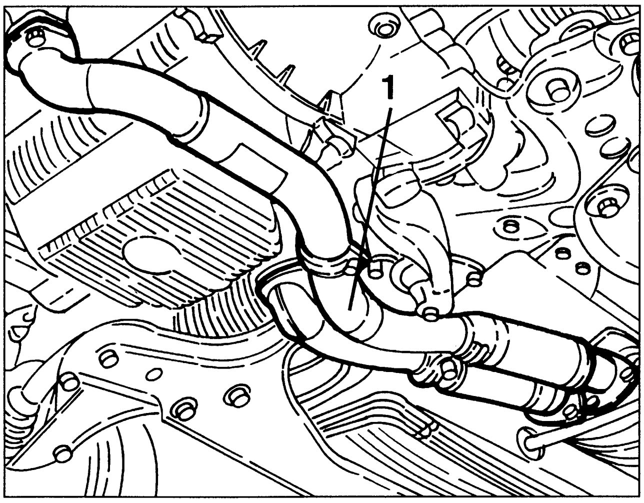

1. Set a hydraulic jack under the gearbox, then slacken the power unit fastening screws on the gearbox side.

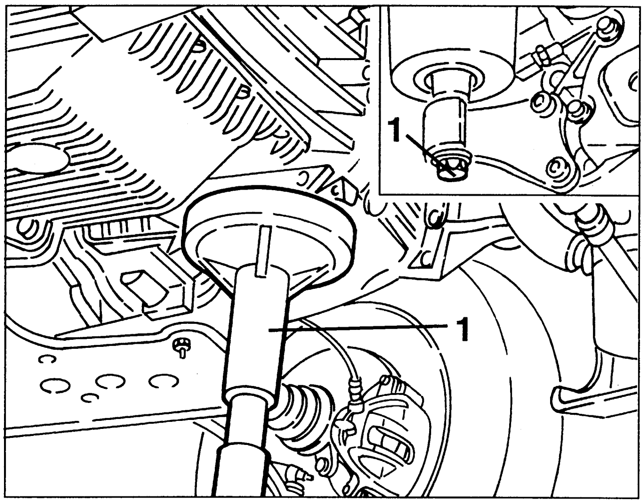

1. Disconnect the the exhaust gas takeoff pipe from the manifold and remove it.
2. Slacken the fastening nuts and remove the exhaust manifold from the right-hand cylinder head.
3. Remove the starter motor heat shields.

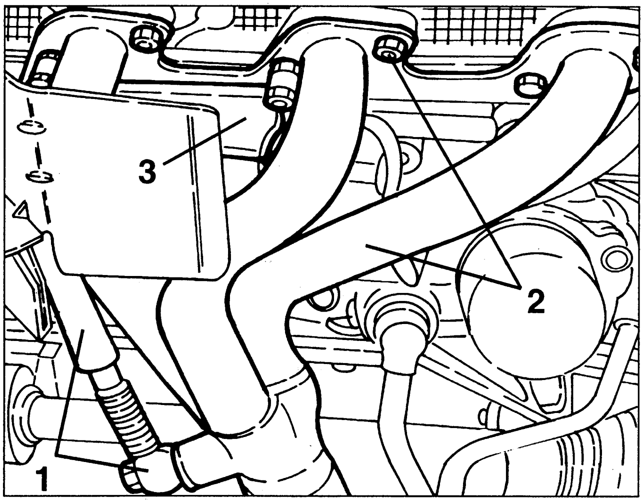

1. Lower the car, slacken the tension of the alternator-water pump drive belt, then remove it.

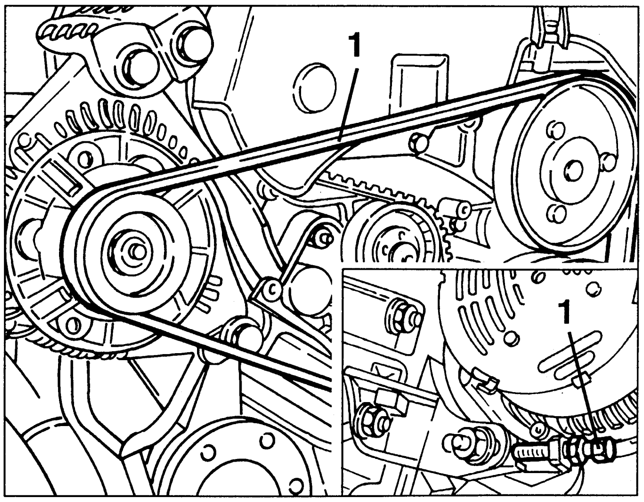

1. Slacken and remove the lower nut fastening the alternator to the support bracket.
2. Slacken the fastening screws and remove the alternator lower support bracket.

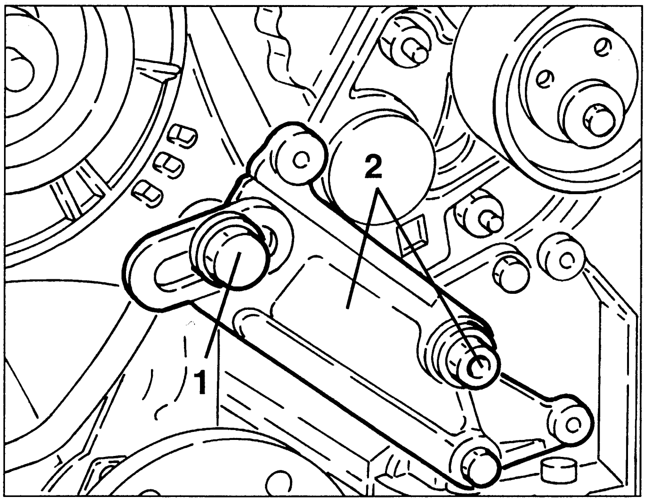

1. Disconnect the alternator supply cables from the branch box.

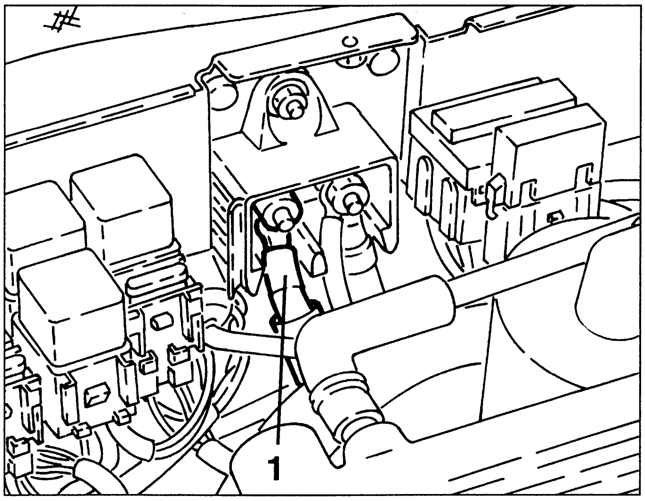

1. Disconnect the condensed oil recovery pipe from the alternator upper support bracket.
2. Slacken the two screws fastening the alternator upper support bracket to the cylinder head.
3. Remove the alternator complete with upper support bracket and dis-assemble them on the bench.

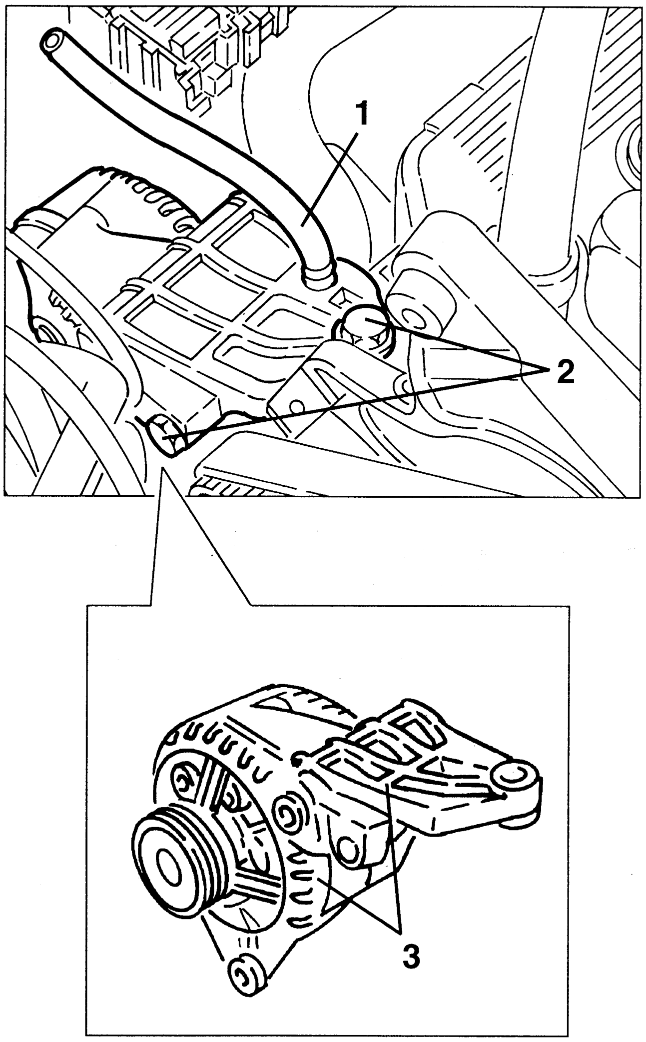

REMOVAL/REFITTING

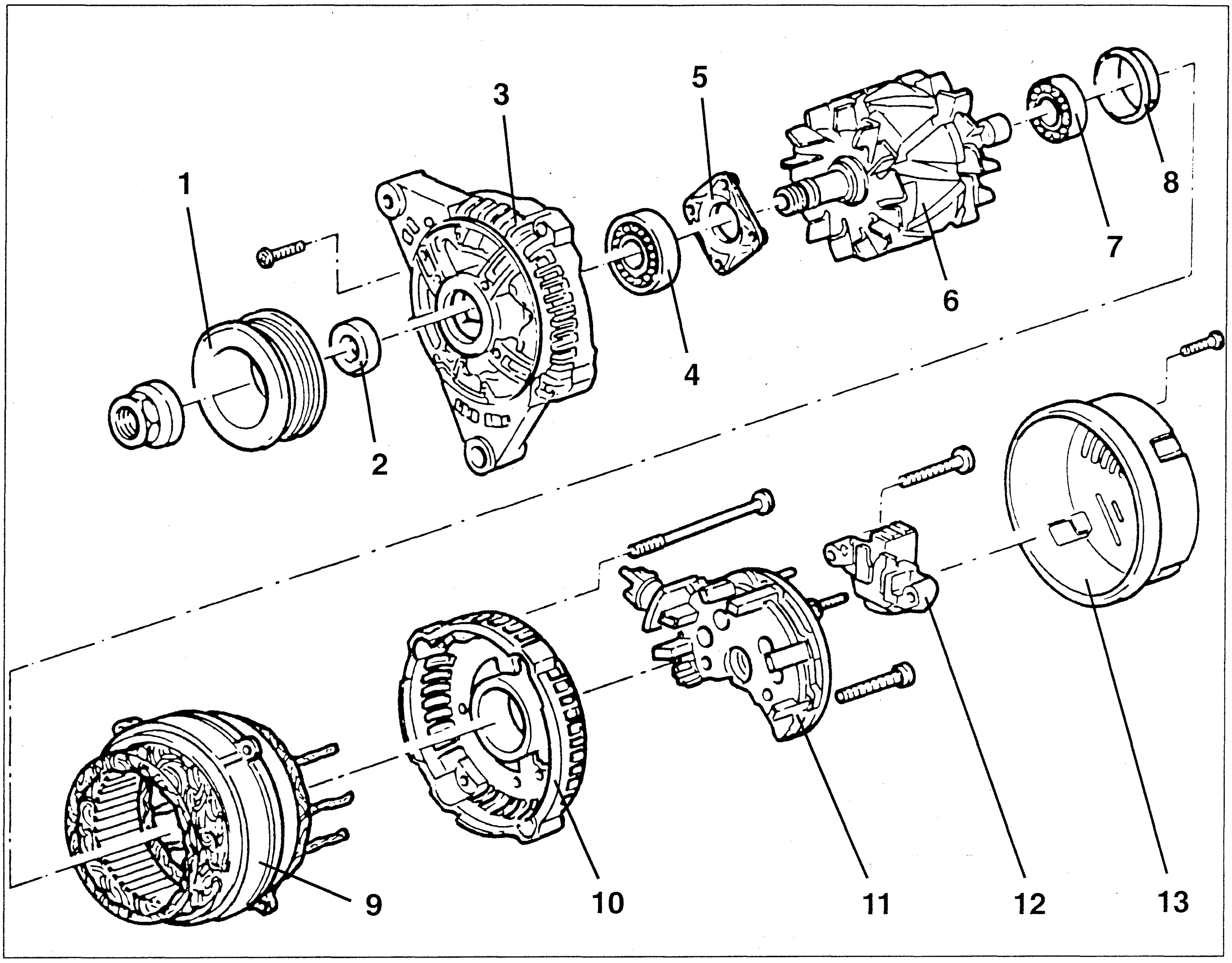

1. Pulley
2. Spacer
3. Drive side support
4. Drive side bearing
5. Cover plate
6. Rotor
7. Regulator side bearing
8. Centering ring
9. Stator
10. Support for collector rings
11. Rectifier unit
12. Voltage regulator - brush holder
13. Protection cap

- Fasten the alternator on a special support tool.
1. Slacken the three fastening screws and remove the protection cap releasing the lock clips.
2. Slacken the two screws fastenings the voltage regulator then remove it releasing it from the side catches.

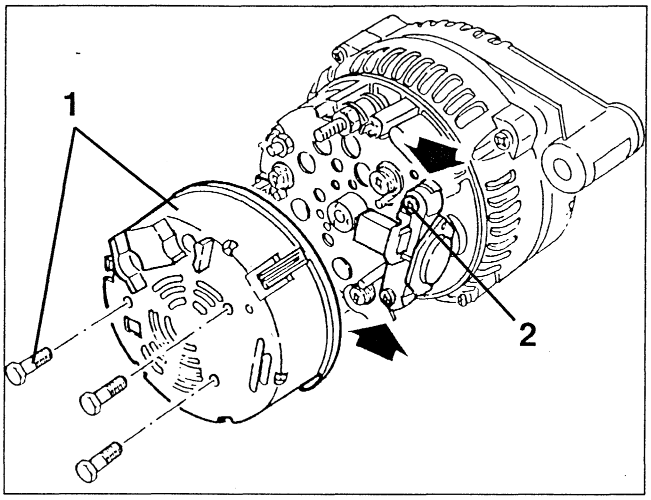

1. Using tool No. 1.822.138.000 together with wrench USAG XZN M10L, slacken the nut fastening the alternator pulley and remove it.
2. Retrieve the spacer.

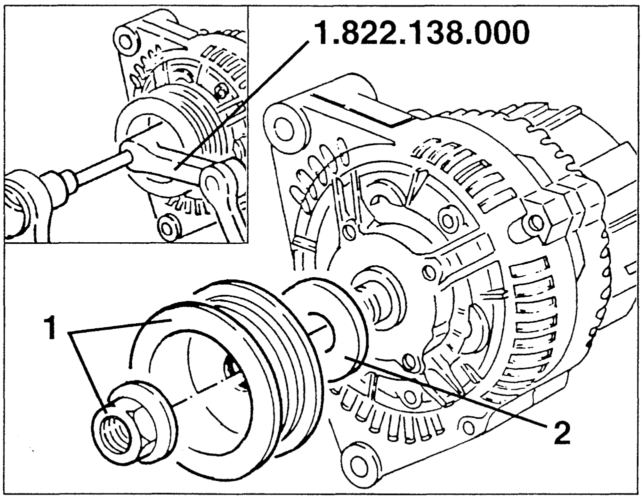

- When tightening the retaining nut with extension spanner N° 1.822.137.000, the torque values become:

300 mm for dynamometer spanner with arm	65 ÷ 74 Nm 6.6 ÷ 7.5 kgm
400 mm for dynamometer spanner with arm	67 ÷ 76 Nm 6.9 ÷ 7.8 kgm

1. Make reference notches on the drive side support and on the connector ring support.

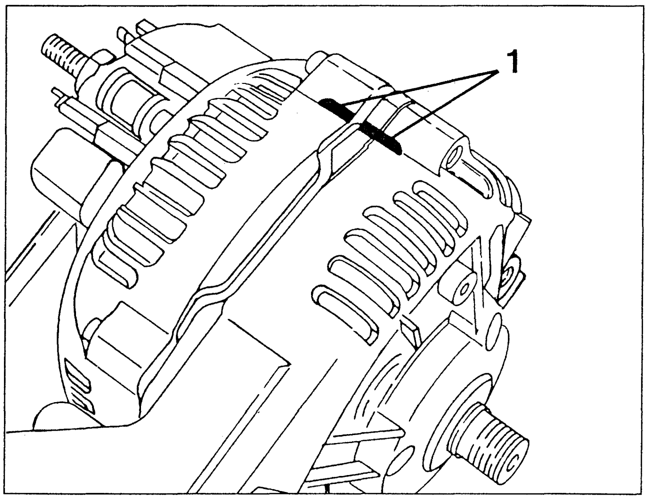

1. Slacken the four fastening screws and remove the drive side support with rotor from the collector ring support.

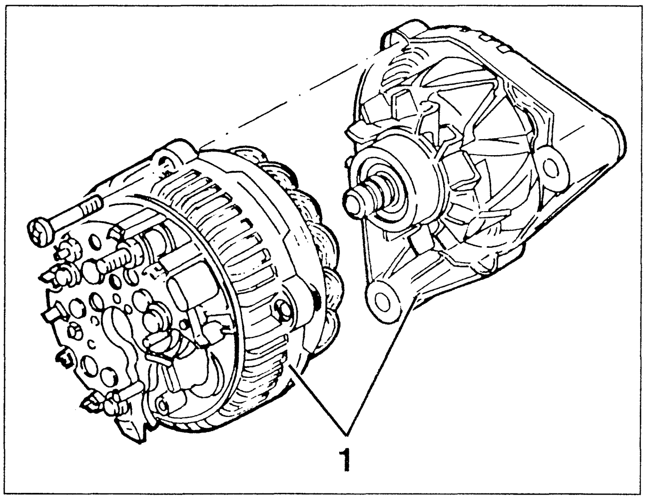

1. Slacken the three screws fastening the rectifier unit to the support.

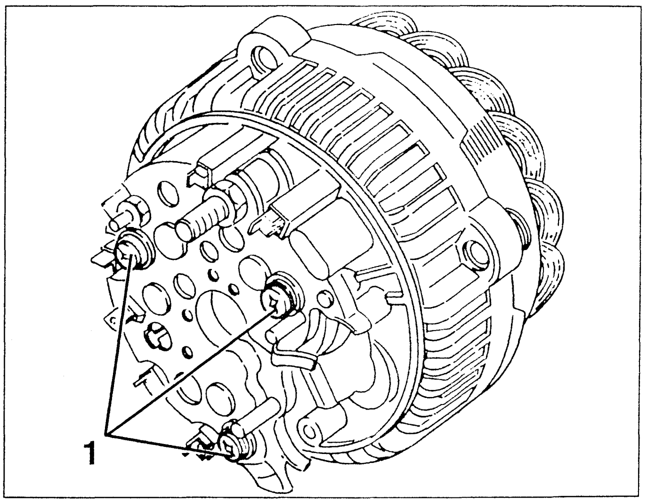

1. Using a screwdriver open the clamps fastening the stator wires.

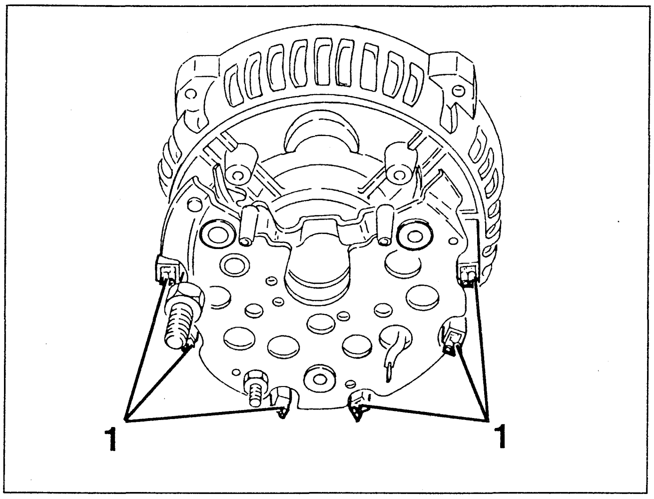

1. Separate the rectifier unit from the collector ring support and from the stator.

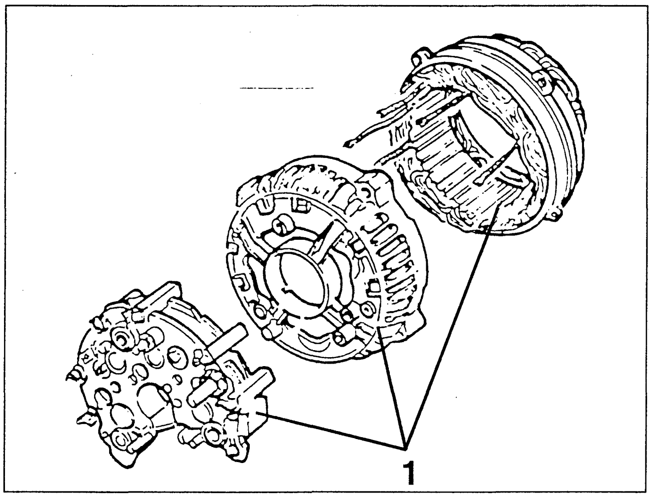

1. Remove the centering ring from the bearing on the regulator side.

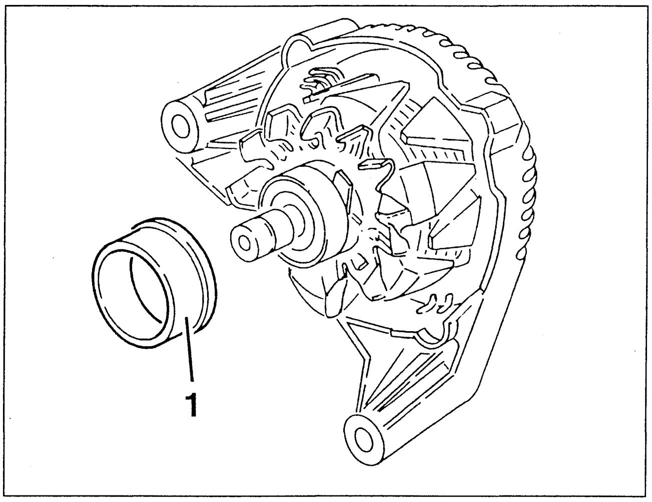

1. Slacken the four fastening screws and remove the rotor complete with bearings from the drive side support.

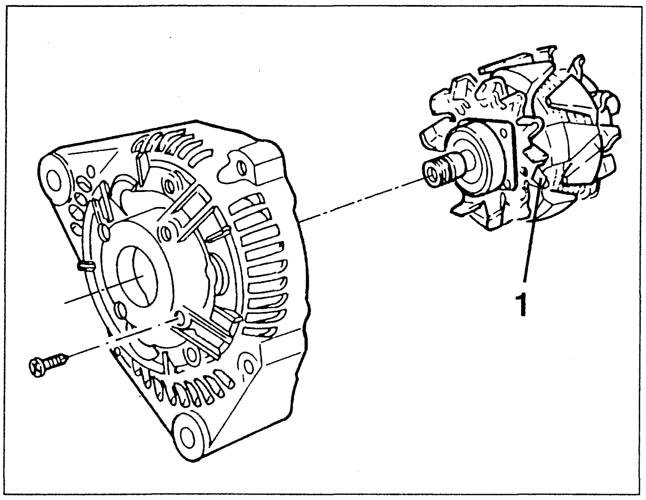

1. Using a suitable puller tool, remove the rotor bearings.
2. Retrieve the cover plate.

CAUTION:
When removing the regulator side bearing, do not use the shaft as a reference plane, as this is made from plastic and might be damaged.

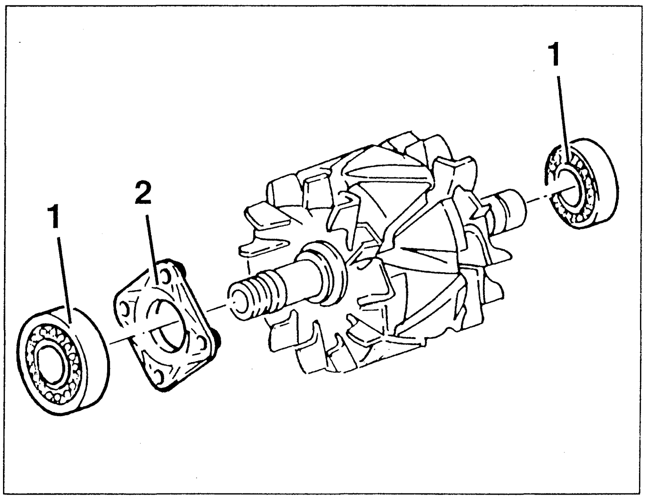

CHECKS AND INSPECTIONS

CAUTION:
The alternators are fitted with long life storage condensers for the suppression of receivers and transmitting systems.
When washing parts of the alternator, the condenser can discharge in contact with the cleaning fluid and this may set fire to inflammable liquids.

Checking the brush wear

- Check the outside of the voltage regulator for damage.
- Change the regulator if the brushes are split or if the protrusion dimension "a" is below the specified value.

Minimum brush length
a = 7 mm

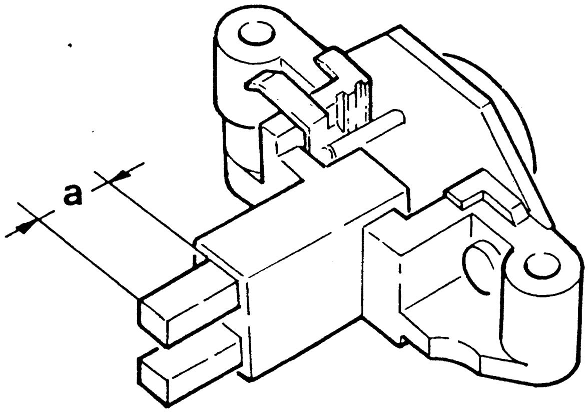

- Also check that the brushes run smoothly and that their springs are rigid enough to ensure good contact of the brushes on the collectors.

Continuity test of the rotor winding

- Check that the resistance of the rotor winding is within the specified ratings connecting the prods of the tester on the collector rings.

Rotor winding resistance
2.6 ÷ 2.8 Ω

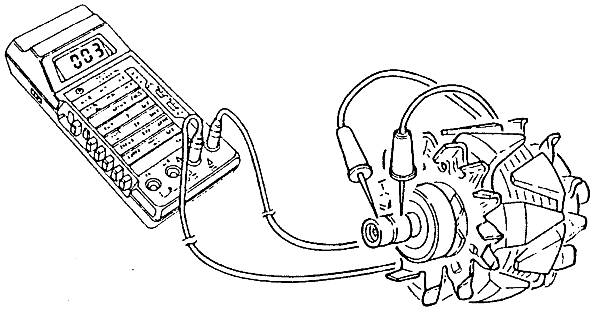

Rotor insulation test

- Place one tester prod on a collector ring and the other one on the rotor core, then check that the tester does not signal the passage of current.

- Repeat the operation for the second collector ring.

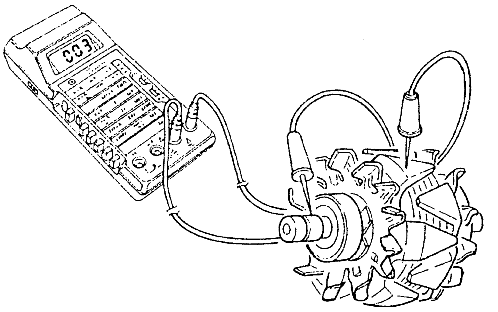

Measuring the concentricity of the rotor and collector rings

- Set the rotor on special supports and using a dial gauge on a magnetic support base, check that the eccentricity of the rotor outside diameter does not exceed the specified value.

Eccentricity of rotor outside diameter
≤ 0.05 mm

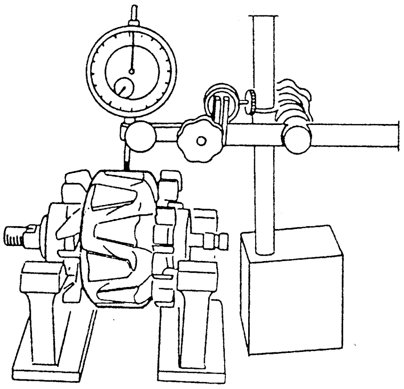

- In the same way, check that the difference on the collector rings does not exceed the specified value.
If necessary, turn the outsides of the collector rings.

Eccentricity of collector rings
≤ 0.03 mm

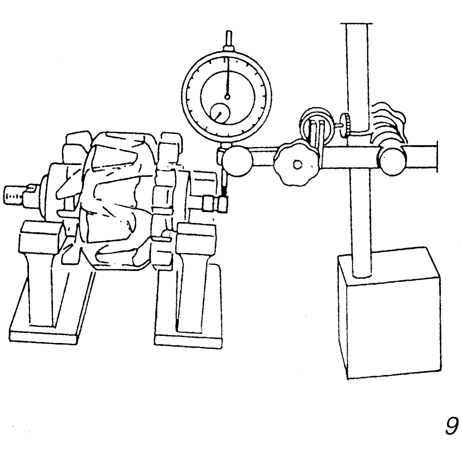

Insulation test for stator windings

- Place one prod of the tester on the stator pack and the other on the terminals of the first phase, then of the second and third. Check that the tester does not signal the passage of current.
Change the stator if insulation is insufficient.

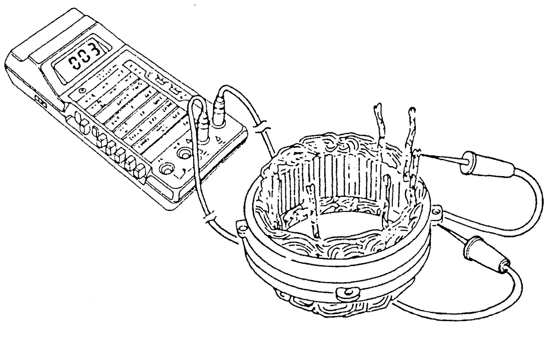

Continuity test of stator windings

- Check the tester termnals respectively on the terminals of phases 1-2, 1-3 and 2-3 and check that in all three cases the tester signals the passage of current.
In the lack of continuity in the windings, change the stator.

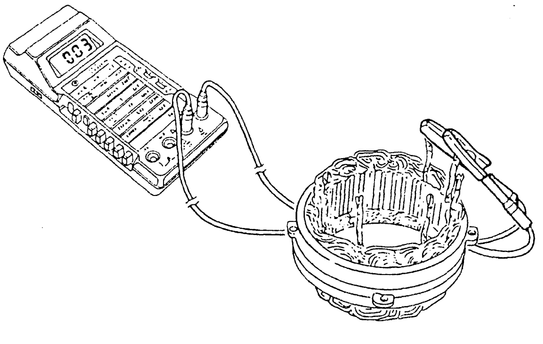

Checking the anti-disturbance condenser on the rectifier

- Slacken the antidisturbance condenser connection tab (-) on the rectifier.
- Connect the tester to B+ of the rectifier and to the slackened connection tab of the condenser and check that the electrical capacity is 1.8 ÷ 2.6 microfarad.

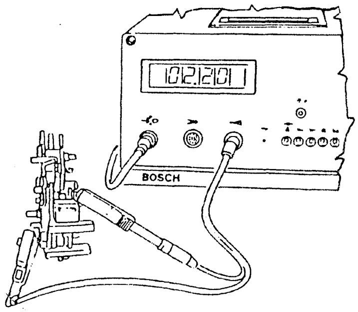

- If not, change the rectifier complete with anti- disturbance condenser.

CAUTION:
After this check, discharge the condenser by short circuit to prevent the liquid detergent from setting on fire when cleaning the components.

Checking the rectifier

- Check that the wired rectifier is working properly using special equipment.
- Connect the terminals of the test equipment to the following points of measurement:
a) Stator frame and connection weldings.
b) B+ and stator connection welding point.
c) D+ stator connection welding point.
The rectifier is in order if the tester dial is in the sector of both measurements.
If one or more dodes are faulty, change the complete rectifier.

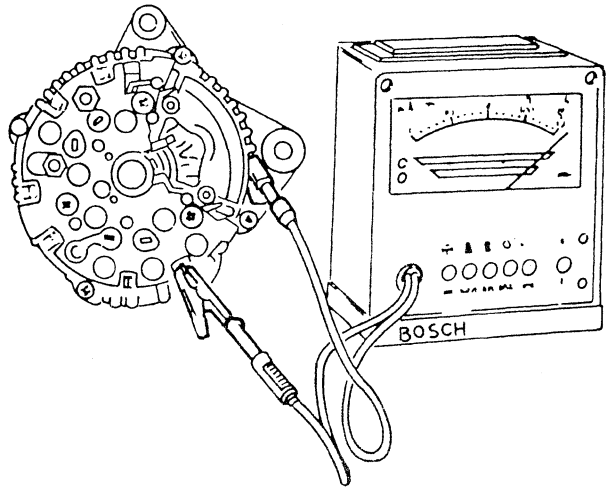

WHITE

LIGHTING

UPPER FRONT LIGHT CLUSTERS

REMOVAL/REFITTING

- Disconnect the battery and open the bonnet.
- Remove the engine compartment cover (see Group 70).

1. Slacken the two screws.
2. Unscrew the nut.
3. Move the light cluster.

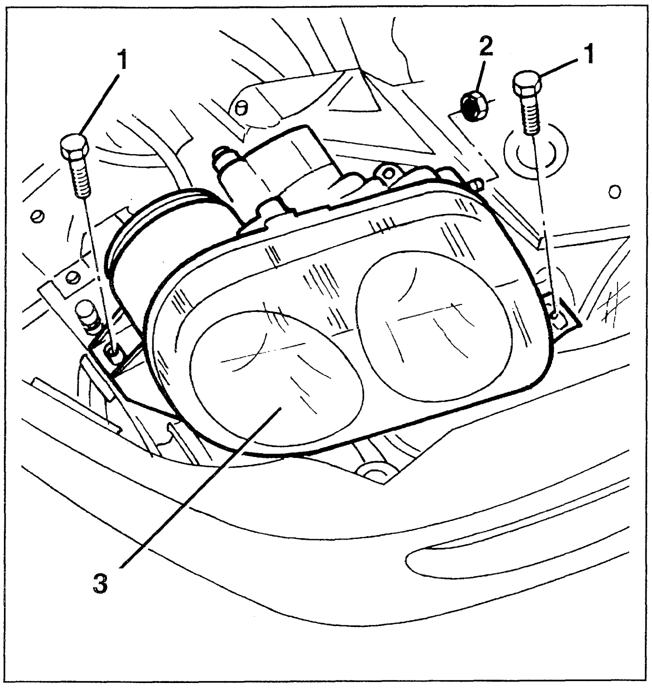

1. Move the light cluster forward just enough to disconnect the electrical connections, then remove the light cluster.

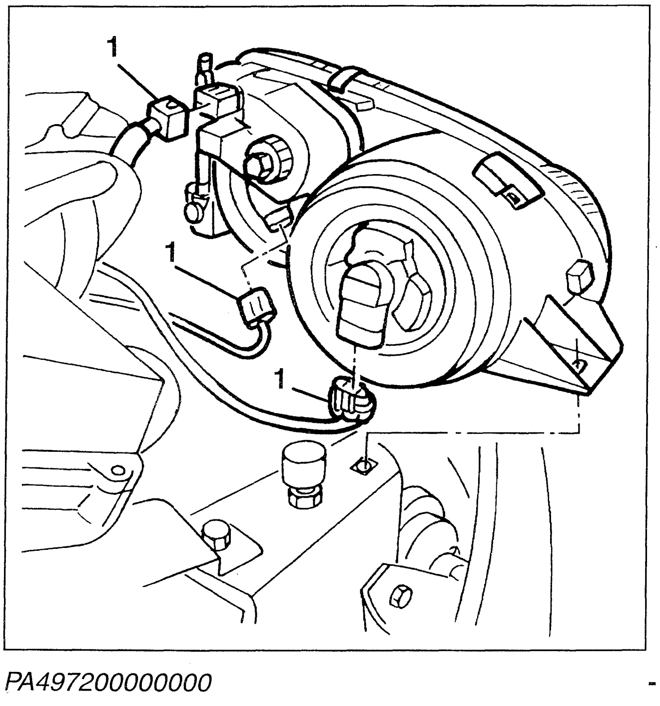

1. Remove the headlamp aiming device motor from the light cluster turning and sloping it to release the ball.

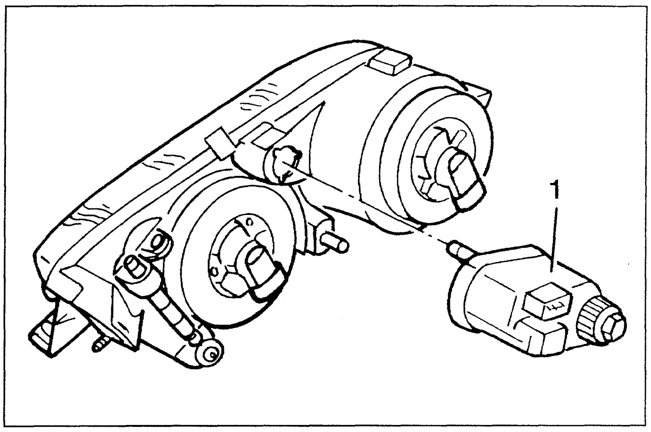

When refitting push the motor arm out completely and, after removing the high beam lamp cover, push the parabola downwards to ensure that the ball catches correctly.

After refitting check that the light clusters are correctly in place with the bonnet closed.
If necessary, adjust the position working on the slots of the connection clamps.
Carry out the headlamp aiming procedure.

BULB REPLACEMENT

- Disconnect the battery.

1. Working from the engine compartment, disconnect the two electrical connections.
2. Twist and remove the low beam lamp bulb holder.
3. Twist and remove the high beam lamp bulb holder.

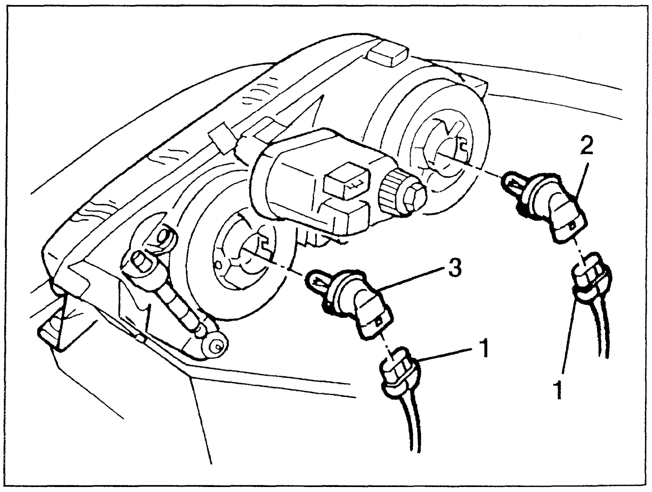

WARNING: The bulbs are integrated with the bulb holder. Do not touch the headlamp bulb glass with the hands; if so, clean with spirit.

HEADLAMP AIMING SWITCH

REMOVAL/REFITTING (to '97 versions)

- Disconnect the battery

1. Remove the headlamp aiming switch panel from its housing on the centre tunnel.
2. Disconnect the electrical connection and retrieve the panel.

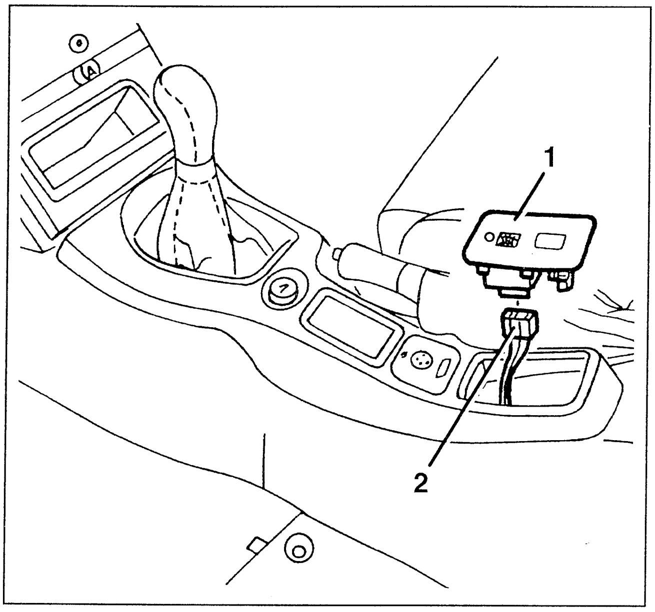

1. Release the side tabs and separate the outer plate.
2. Retrieve the headlamp aiming switch.

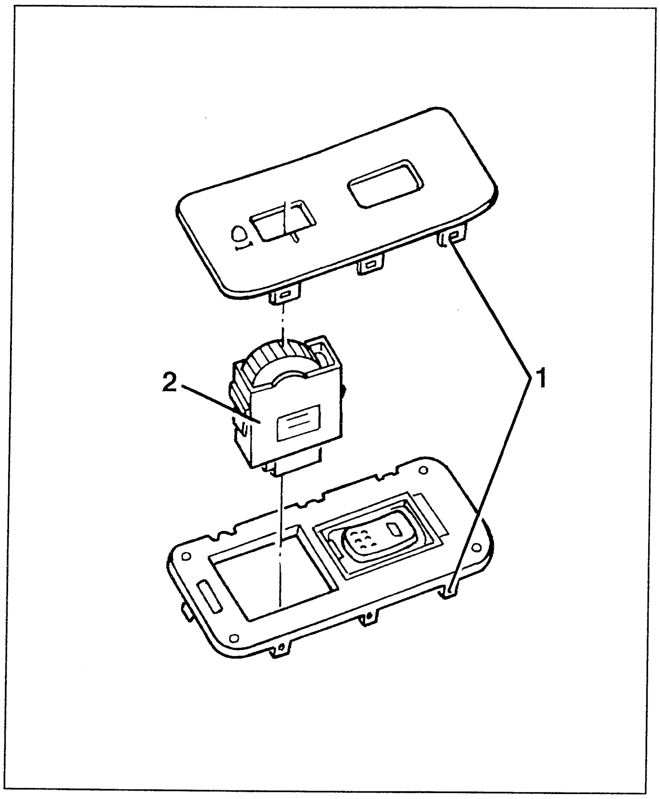

REMOVAL/REFITTING ('98 versions)

- Disconnect the battery

1. Use tool 1.823.014.000 to remove the switch board.
2. Disconnect the electrical connections.
3. Take the switch board.

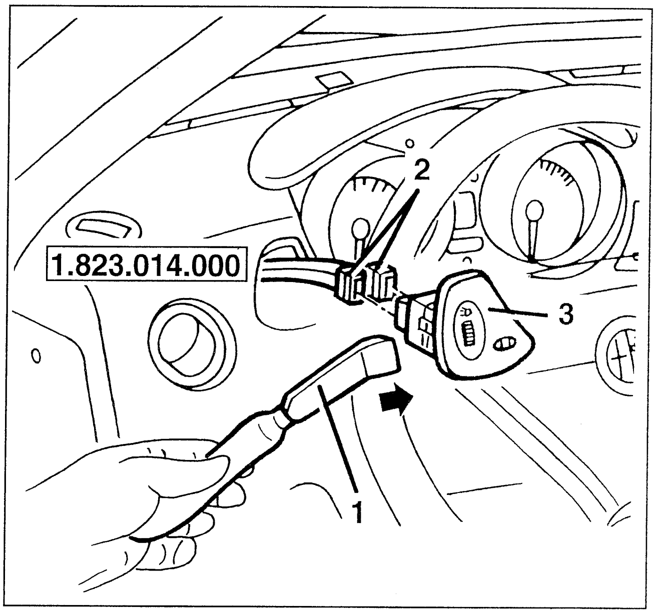

1. Press the side tabs and remove the external plate.
2. Take the headlight slant switch.

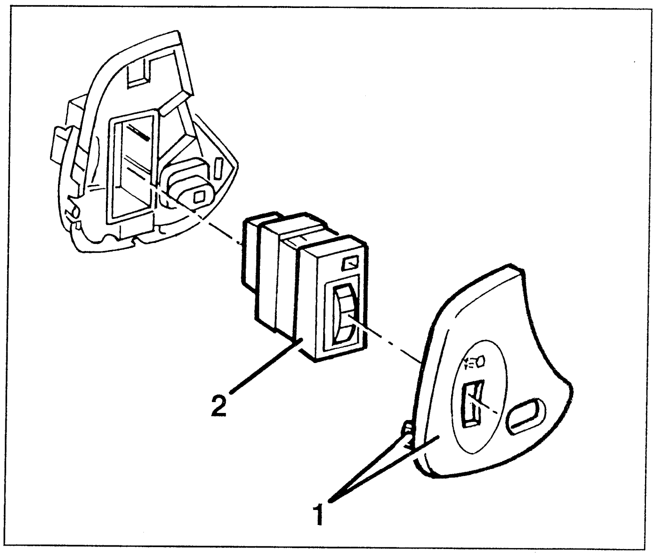

Table of positions of headlamp aiming switch

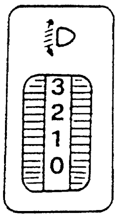

Position of knob	Vehicle load
0	driver only or driver and passenger on front seat
1	all seats occupied
2	all seats occupied plus load in luggage compartment (up to reaching maximum permissible load on rear axle)
3	driver plus load in luggage compartment (up to reaching maximum permissible load on rear axle)

HEADLAMP AIMING

There are the following two possibilities for aiming the upper light clusters:

1. Horizontal adjustment screw.
2. Ring nut for vertical adjustment.

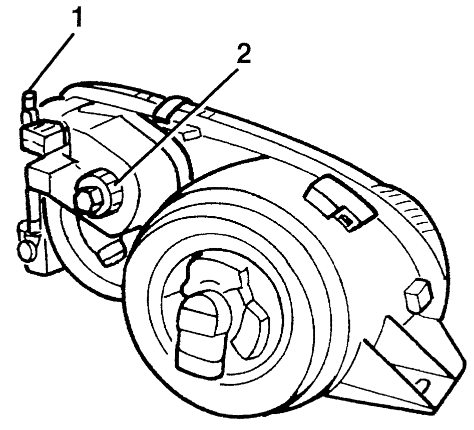

WARNING:
Before aiming the headlamps make sure that the light clusters are perfectly aligned with the bonnet closed. If necessary adjust the light cluster slotted fastenings.

Vehicle preparation

The vehicle must be complete with spare wheel, tool kit, oil fluids and fuel, the tyre pressure should be as specified for normal service with the driver on board.

Set the vehicle on a level surface with the headlight cluster glass 10 m from a screen or opaque surface on which the followig lines have been traced:

V - V: vertical corresponding to the trace of the plane of symmetry of the vehicle.

C - C: corresponding to the traces of the vertical plaes passig through the centres of reference of the light clusters.

HC - HC: horizontal corresponding to the height from the ground of the centres of reference of the light clusters.

AC - AC: horizontal below line Hc - Hc by 14 cm (value for new cars), 11 cm (value for other than new cars).

Aim the light clusters on the low beam. Acting on the headlamp aiming device as follows.

NOTE: For cars fitted with headlamp aiming device adjust with the device at position "0".

Vertical aiming

Make the horizontal section of the line of demarkation between the dark zone and the illuminated zone coincide with line Ac - Ac traced on the screen.

Horizontal aiming

Make the crossing point of the horizontal and sloping lines of demarkation coincide with the respective crossing point of lines C - C and Ac - Ac of the screen. If the screen needs to be set nearer to the car, this value must be reduced proportionately (eg: if the screen is at half the distance, it must be halved).

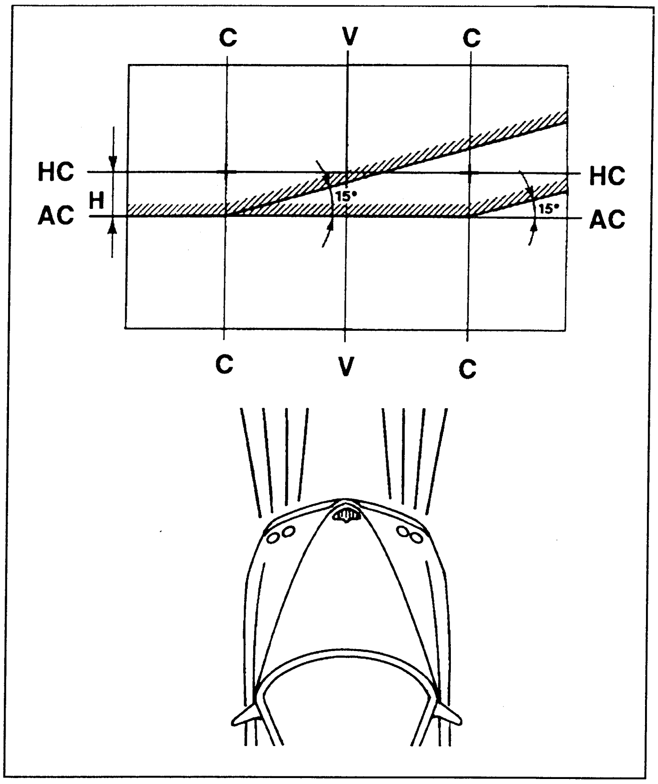

LOWER FRONT LIGHT CLUSTERS

REMOVAL/REFITTING

- Disconnect the battery.
1. Remove the triangular trim.
2. Slacken the two screws.
3. Remove the light cluster releasing the outer pin.
4. Disconnect the electrical connections and remove the light cluster.

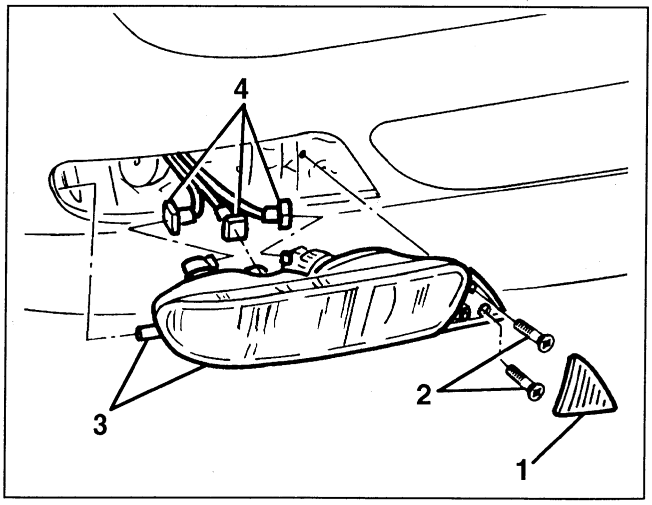

BULB REPLACEMENT

1. Twist and remove the direction indicator bulb holder and remove the bulb from the bulb holder.
2. Twist and remove the sidelights bulb holder and remove the bulb from the bulb holder.
3. Twist and remove the fog lamp cover.
4. Disconnect the connection.
5. Release the fastening clip.
6. Remove the fog lamp bulb.

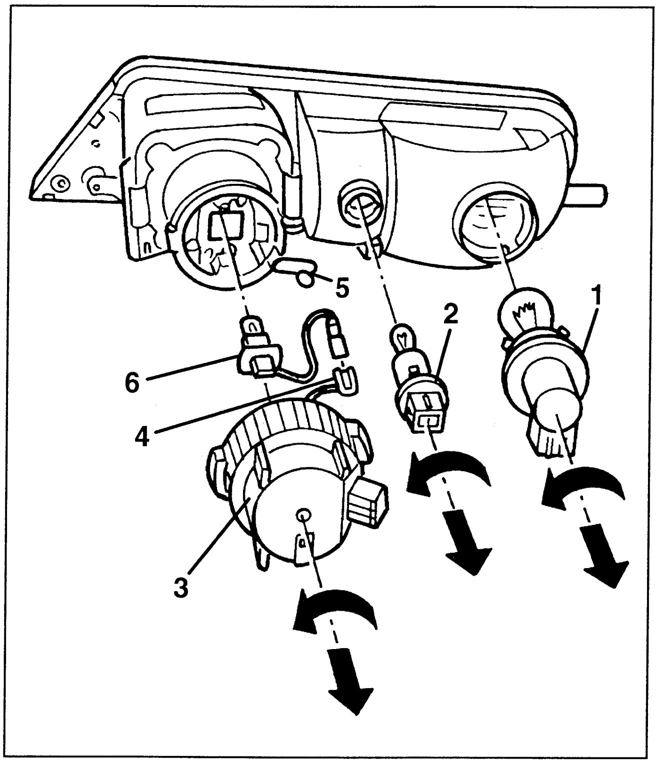

1. If necessary, when refitting adjust the height of the foglamp beam using the special screw.

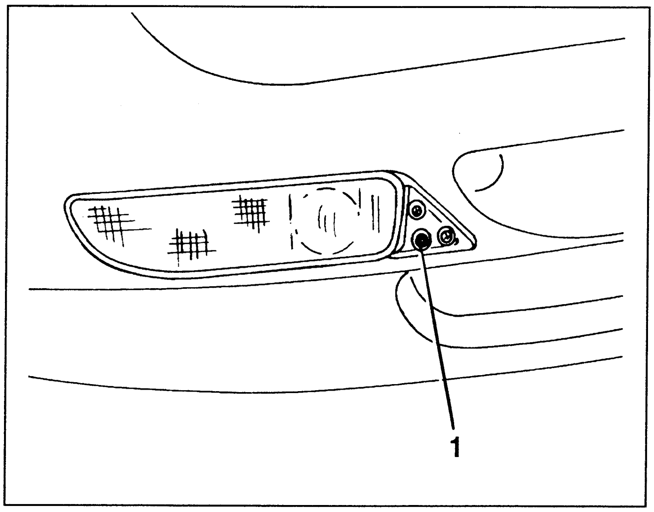

TAIL LIGHT CLUSTER

REMOVAL/REFITTING

NOTE
The tail lights are gathered together in the tail light strip and comprise four autonnomous units with two bulbs each. The diagram below shows the position of the different bulbs, seen from the outside of the car.

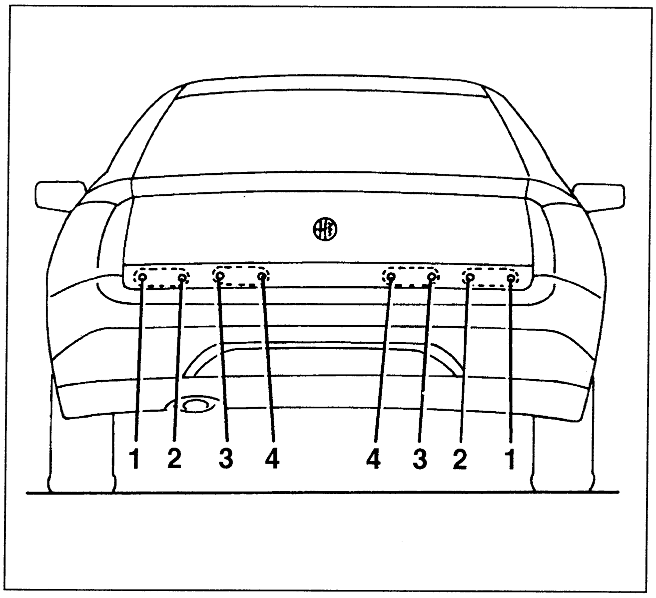

1. *Direction indicator*
2. *Sidelight - stop light*
3. *Reversig light*
4. *Rear fog guard*

- Disconnect the battery.
- Remove the rear luggage compartmet trim (see group 70)

1. Twist the bayonet connection.
2. Remove the bulb holder unit.
3. Disconnect the electrical connection.
4. If necessary, remove the bulbs from the bulb holder pressing and turning them counter-clockwise.

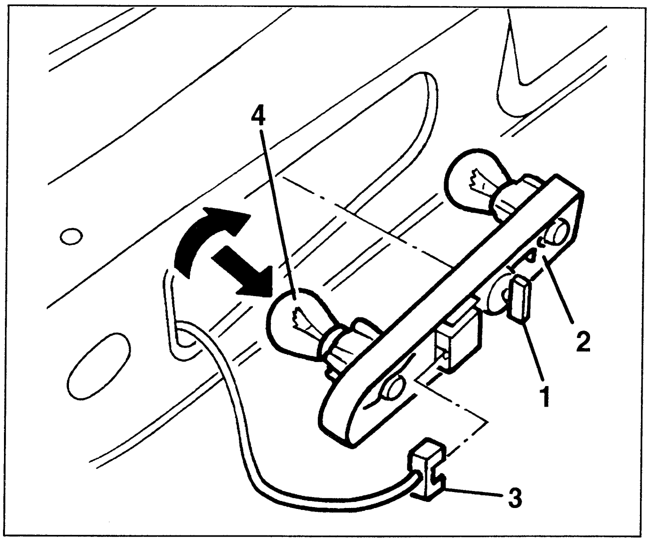

NUMBER PLATE LIGHTS

REMOVAL/REFITTING

- Disconnect the battery.

1. Remove the umber plate lights from their housing on the bumpers, working as illustrated.
2. Disconnect the electrical connection from the nnumber plate light and remove it.

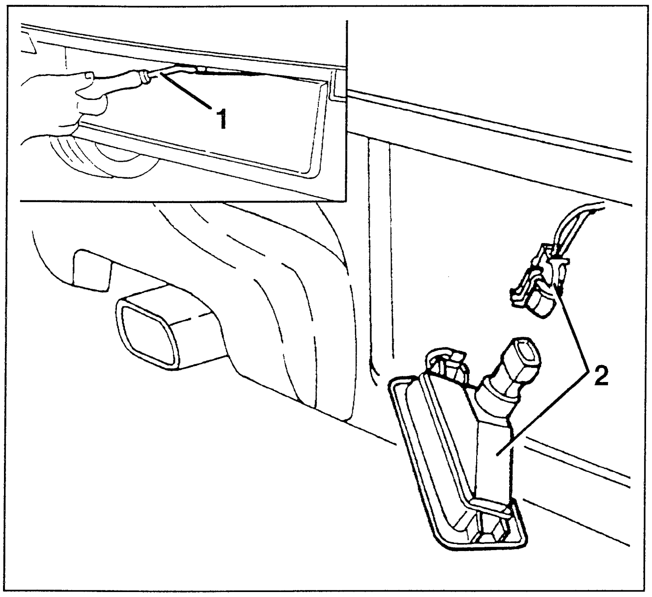

- If necessary, remove the "all glass" bulb.

DIRECTION INDICATOR SIDE REPEATERS

REMOVAL/REFITTING

1. Working as illustrated, remove the side direction indicator repeater from its housing.
2. Turn the bulb holder counter-clockwise and remove the side direction indicator repeater.

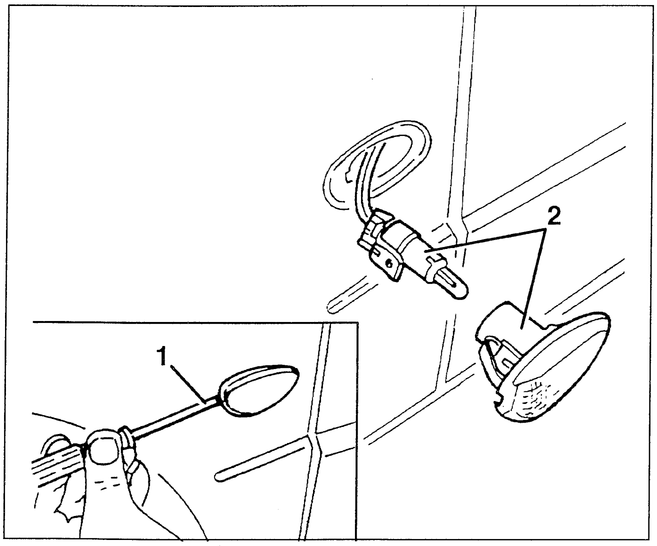

- If necessary, remove the "all-glass" bulb.

THIRD STOP LIGHT - SPIDER

REMOVAL/REFITTING

- Open the top cover and disconnect the battery.

1. Slacken the two nuts.
2. Remove the third stop light.
3. Disconnect the electrical connection.

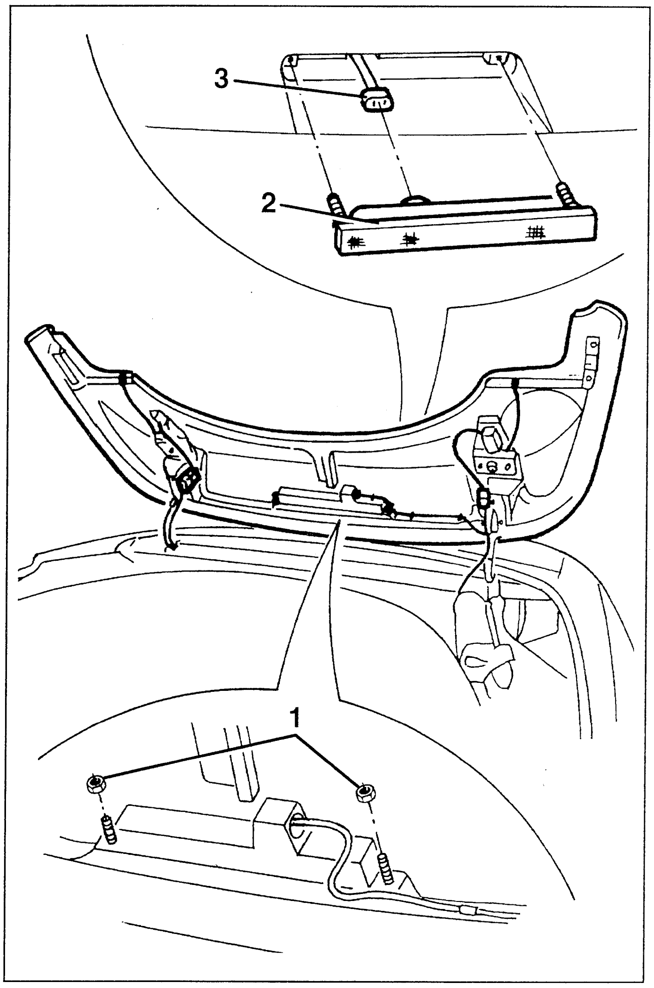

1. If necessary, open the third stop light and remove the bulbs, pressing and turning them counter-clockwise.

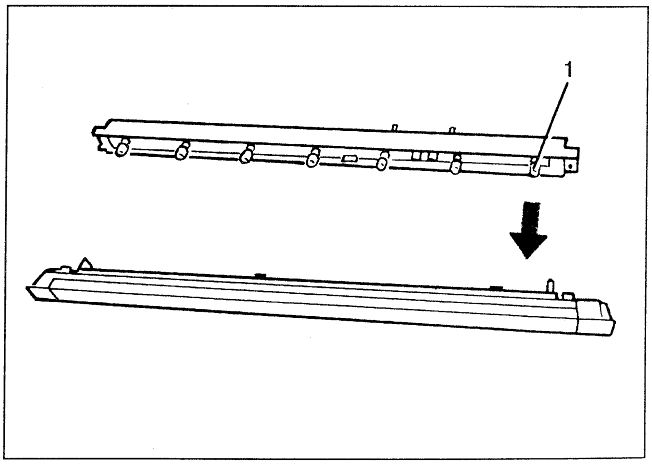

THIRD STOP LIGHT - GTV

REMOVAL/REFITTING

- Disconnect the battery.

1. Using tool 1.823.014.000 raise the third stop light cover.
2. Disconnect the electrical connection.
3. If necessary, slacken the two screws and remove the complete unit.
4. Slacken the two screws and remove the bulb holder panel.

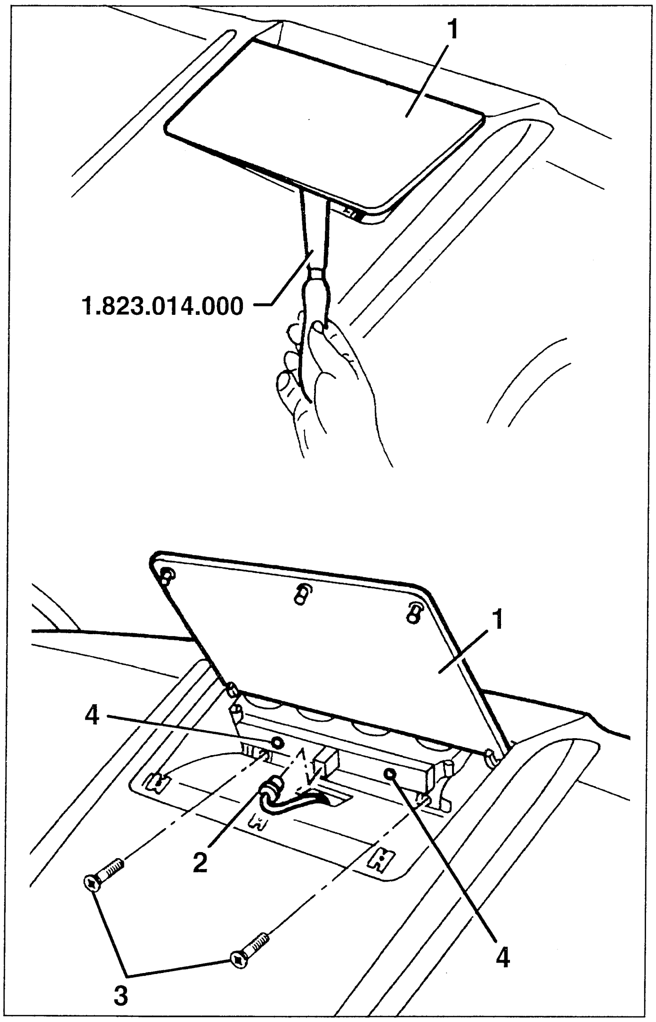

1. If necessary, remove the "all-glass" bulbs.

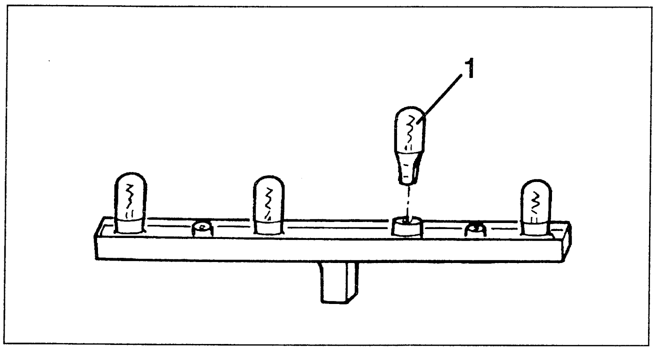

THIRD BRAKE LIGHT GTV ON REAR SPOILER ('98 versions)

REMOVAL/REFITTING

- Disconnect the negative battery terminal.

1. Loosen the supplementary brake light fastening screws.
2. Move the supplementary brake light aside.
3. Disconnect the electrical connection and take the supplementary brake light.

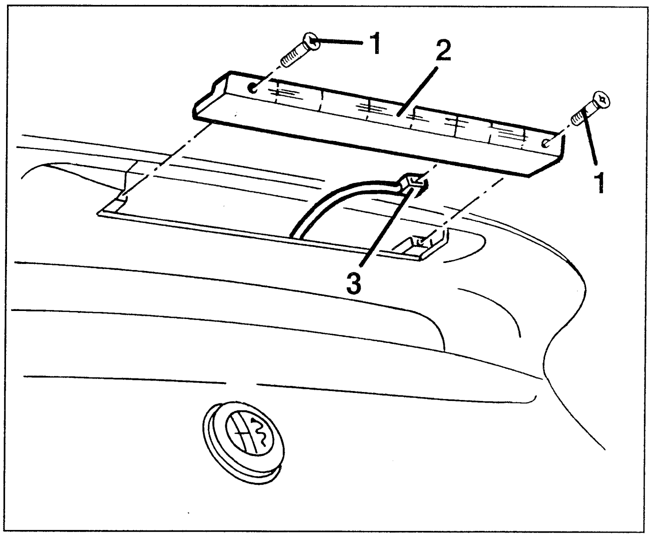

Refit the supplementary brake light by reversing the removal sequence.

PASSEGER COMPARTMENT ROOF LAMP

REMOVAL/REFITTING

- Disconnect the battery.

1. Using tool 1.823.014.000 inserted in the side slit, remove the roof lamp from its frame.

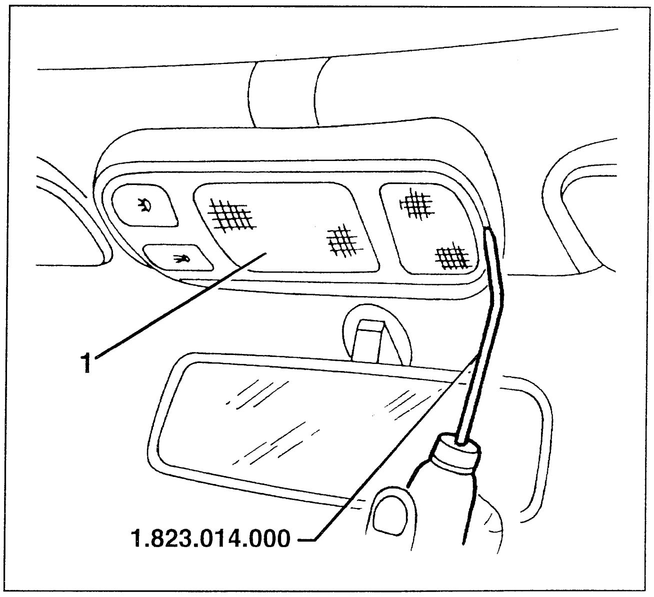

1. Disconnect the electrical connection and remove the roof lamp.
2. If necessary, remove the roof lamp bulb pulling it outwards.
3. If necessary, remove the reading lamp bulb.

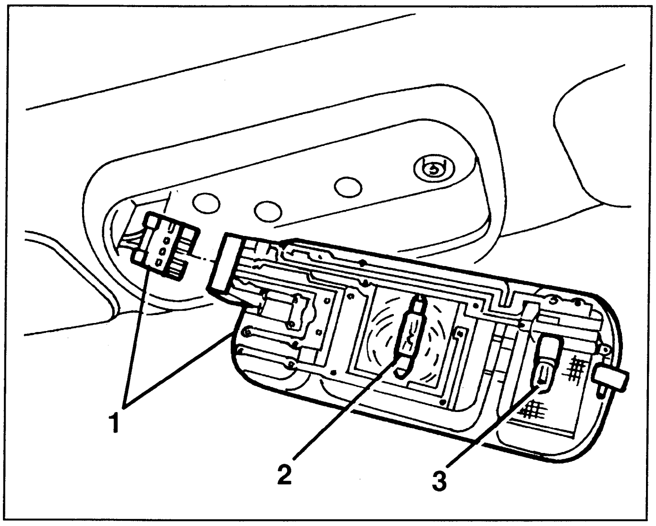

GLOVE BOX LIGHT

REMOVAL/REFITTING

- Disconnect the battery

1. Open the glove box and remove the complete light unit.
2. Disconnect the electrical connection.

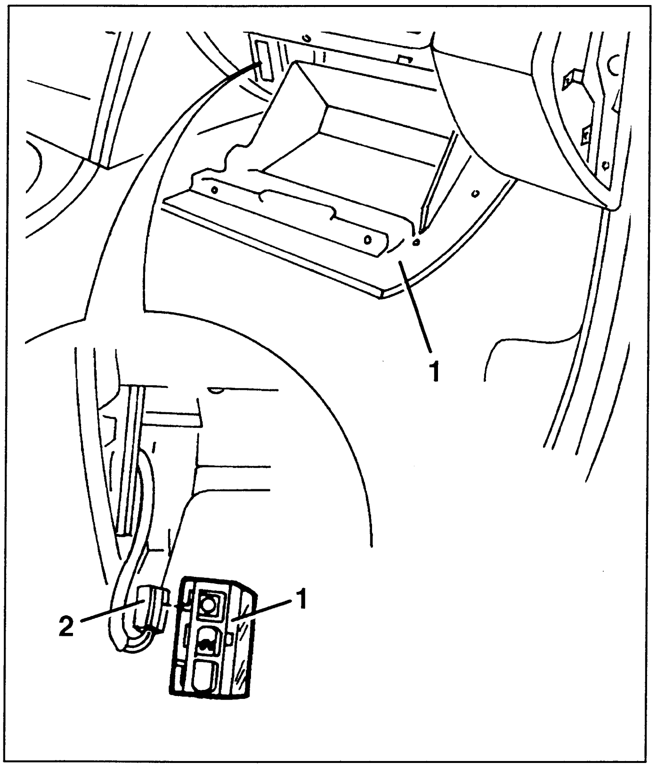

BULB REPLACEMENT

- Open the glovebox.

1. Remove the transparent cover.
2. Remove the bulb pulling it outwards and releasing it from the contacts.

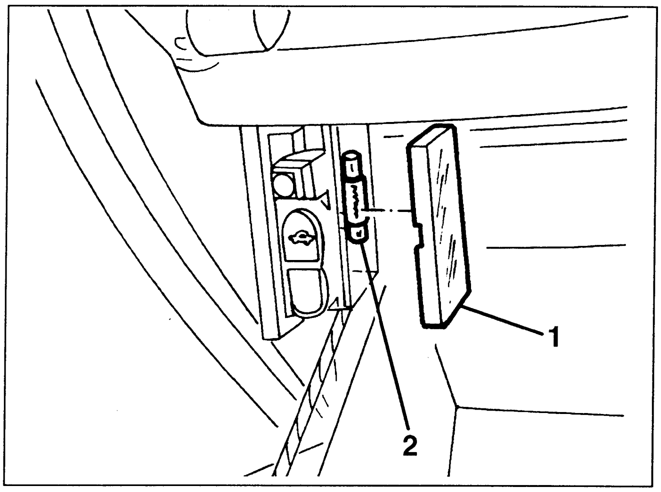

DASHBOARD LIGHT

REMOVAL/REFITTING

- Disconnect the battery

Working under the dashboard:

1. Remove the lamp taking it out from below.
2. Disconnect the electrical connection.

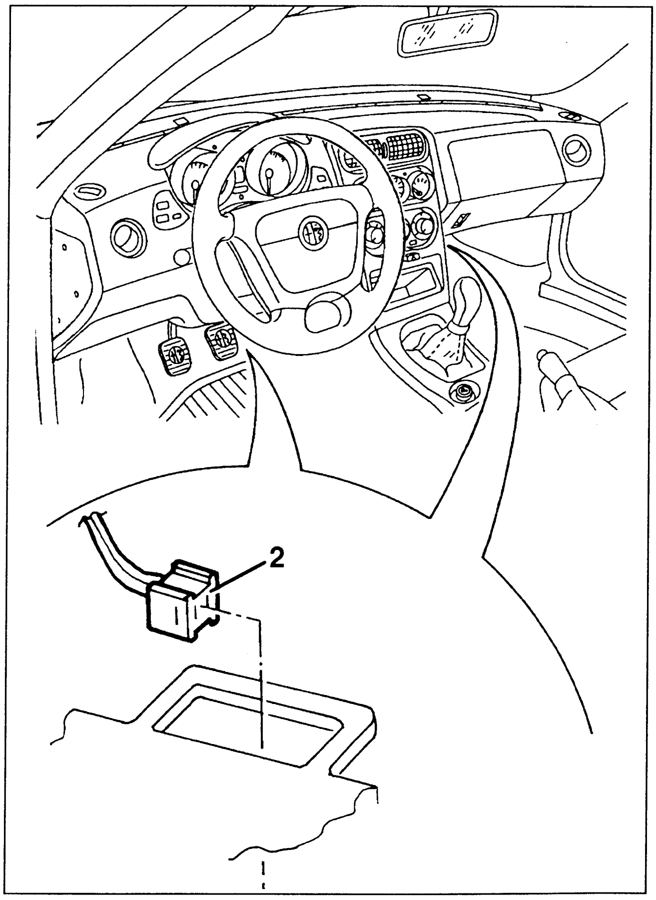

1. If necessary, remove the cover and change the bulb.

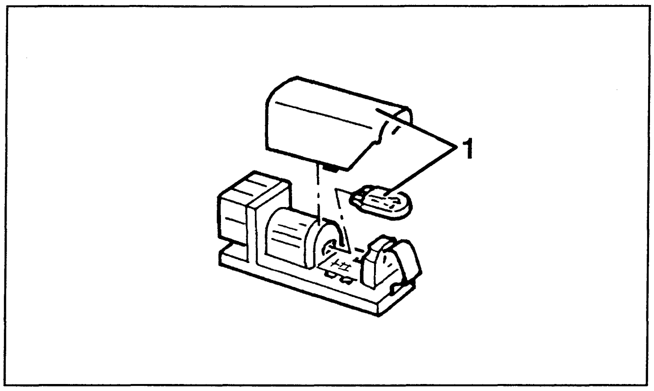

DOOR LIGHT

REMOVAL/REFITTING

- Disconnect the battery.

1. Open the door and, working from the lower side of the door panel, remove the light from its housing.

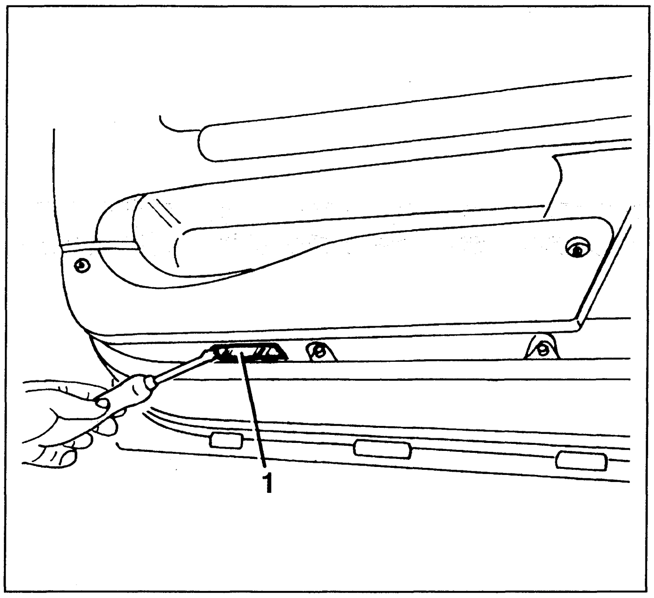

1. Disconnect the connection.
2. Retrieve the light.

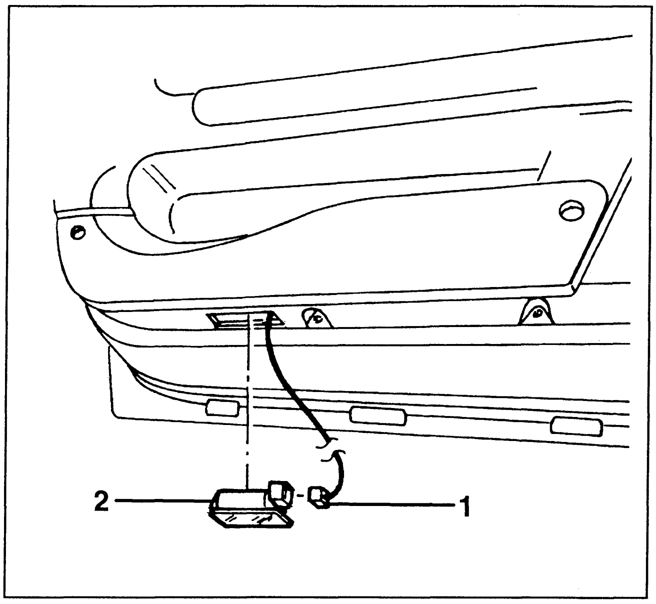

1. If necessary, remove the cover and change the bulb.

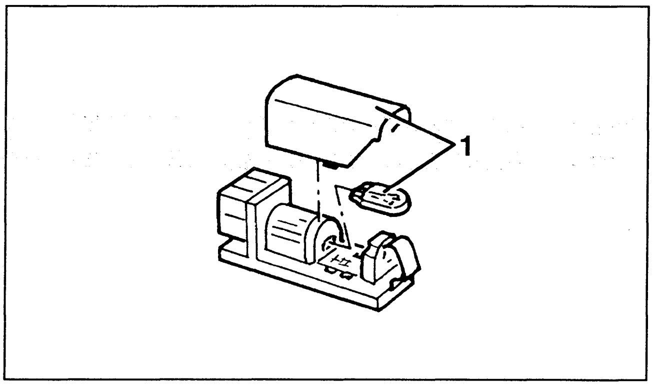

LUGGAGE COMPARTMENT LIGHT

REMOVAL/REFITTING

- Open the boot and disconnect the battery.

1. Remove the light from its housing.
2. Disconnect the two electrical connections.

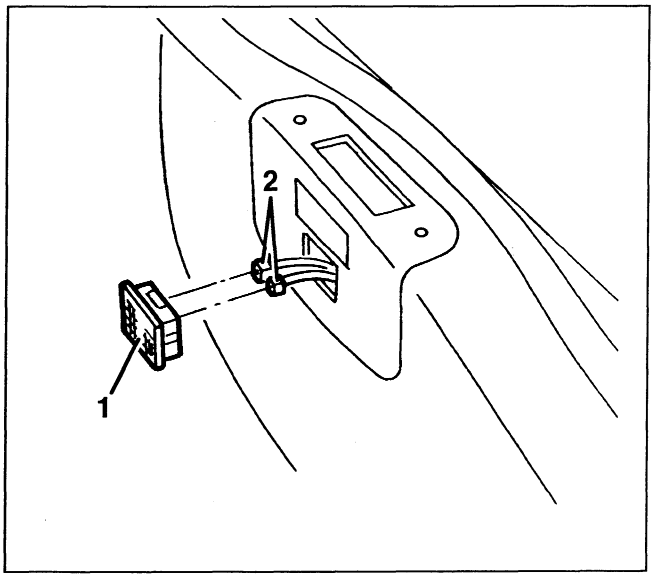

1. If necessary, remove the bulb pulling it outwards and releasing it from the side contacts.

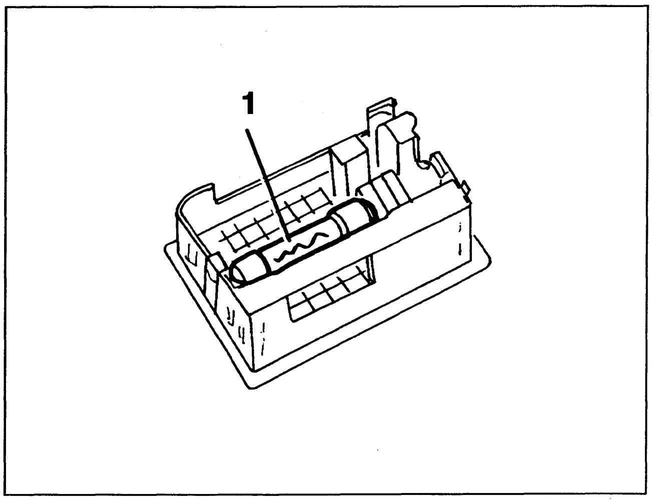

BULB TABLE

Service	Power rating (W)	Type
High beam	55	A
Low beam	55	A
Front sidelight	5	B
Front direction indicator	21	C
Foglamp	55	E
Side direction indicator repeater	5	B
Rear direction indicator	21	C
Rear stop/side lights	21/5	C
Third stop - Spider	2.1	C
Third stop - Gtv	5	B
Reversing light	5	C
Rear fog guard	21	C
Number plate light	5	C
Passenger compartment roof light	5	D
Reading lamp	5	C
Dashboard and door lights	5	B
Glovebox light	5	D
Luggage compartment light	10	D
Climate controls lighting	1.2	B

⚠ **WARNING:**
When changing a bulb always replace it with one of the same type.

TYPES OF BULBS		
A	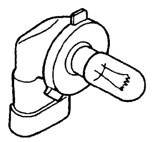	Bulbs with "integral" bulb holder. Replace the bulb complete with bulb holder
B	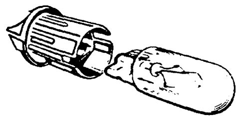	"All-glass" bulbs. These are pressed on. Pull to remove.
C	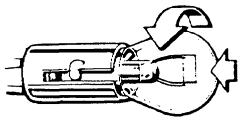	Bayonet bulbs. To remove from the bulb holder: press the bulb, turn it counter-clockwise, then remove it.
D	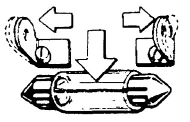	Cylindrical bulbs To remove these, release from the side contacts.
E	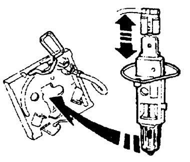	Halogen bulbs. To remove the bulb, release the clip fastening the bulb from its housing.

VARIOUS DEVICES

FUSEBOX

REMOVAL/REFITTING

- Disconnect the battery

1. Using tool 1.823.025.000 turn the three bayonet pins fastening the fusebox cover.
2. Remove the fusebox cover.

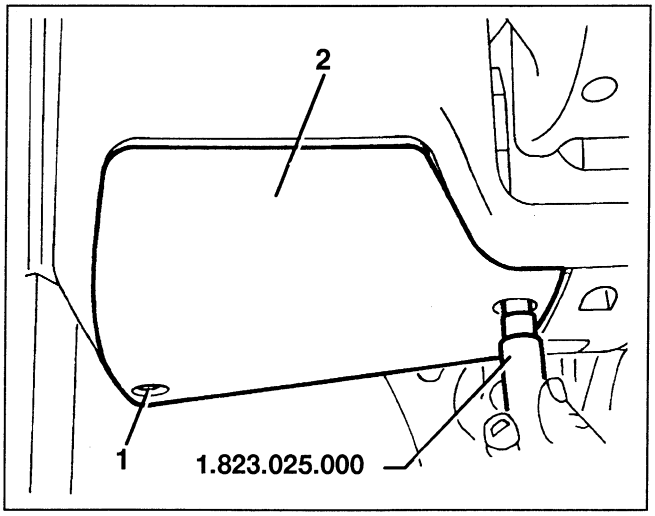

1. Slacken the centre screw of the fusebox bracket.
2. Slacken the bolts of the fusebox catches.
3. Release the various relays from the fusebox bracket.
4. Release the fusebox, disconnect the various connectors and retrieve the fusebox.

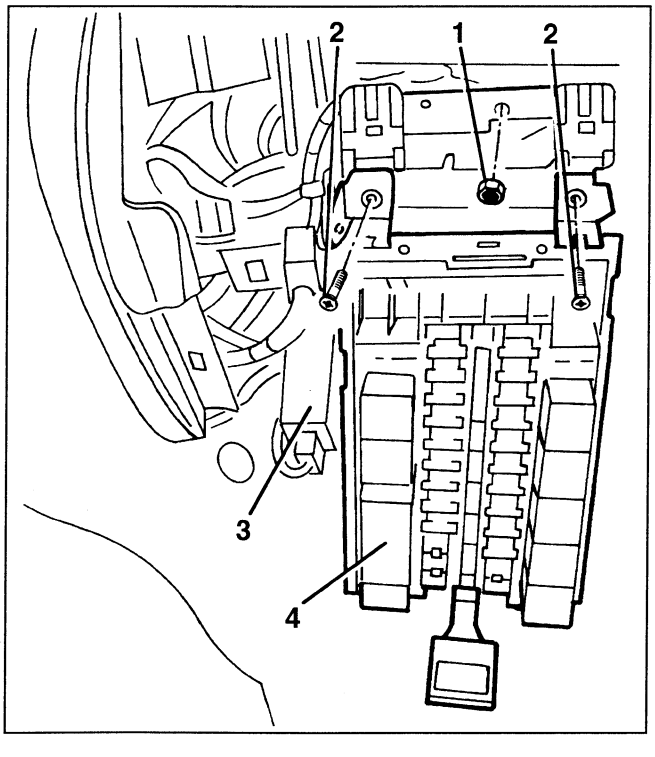

IGNITION SWITCH

REMOVAL/REFITTING

- Remove the lower steering column cover half (see Group 41)

1. Engage the key and set it to the "MAR" position.
2. Work on the fastening clamp with a punch through the special slot.
3. Remove the ignition switch.

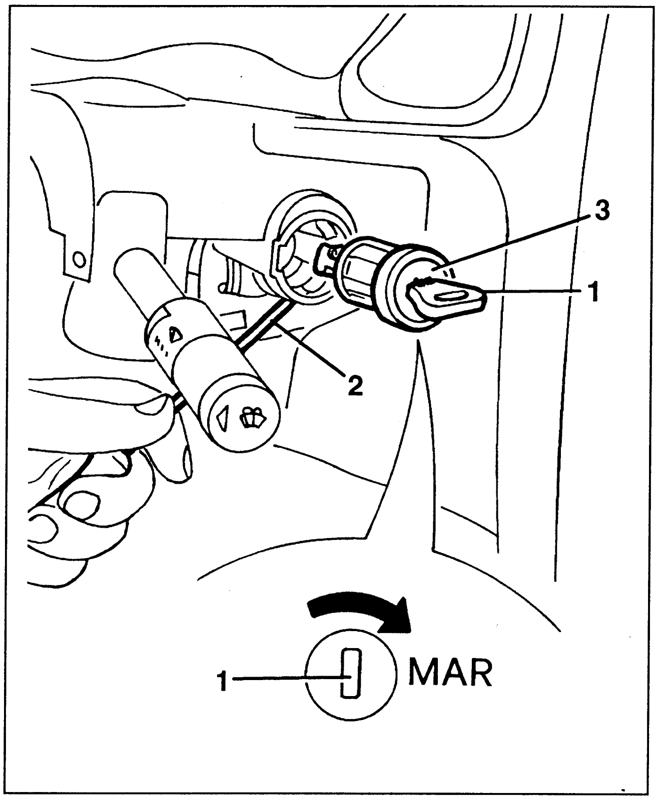

WINDSCREEN WIPER UNIT

REMOVAL/REFITTING

- Disconnect the battery.
- Remove the air intake grille (see GROUP 70).

1. Slacken the two screws.
2. Slacken the nut.
3. Raise the windscreen wiper unit.
4. Disconnect the two electrical connections and retrieve the unit.

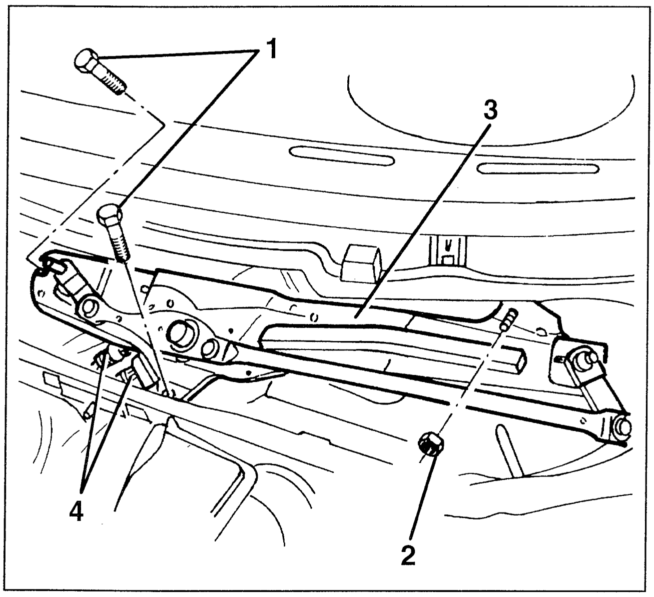

1. If necessary, disconnect the joints and retrieve the rods.
2. If necessary, remove the retainer ring and disassemble the windscreen wiper pins.
3. If necessary, slacken the nut connecting the lever to the motor.
4. Slacken the screws and remove the motor unit.

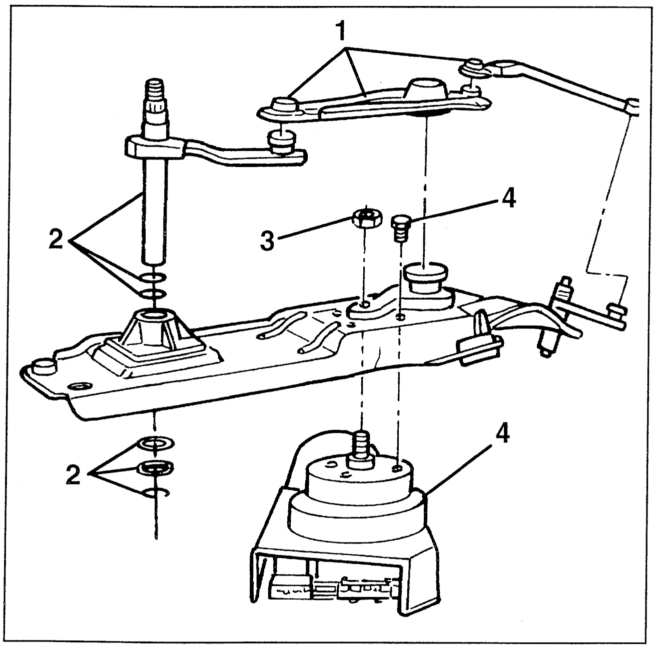

WINDSCREEN WASHER PUMP

REMOVAL/REFITTING

- Empty the windscreen washer fluid reservoir.
- Disconnect the battery.

1. Disconnect the electrical connection of the pump.
2. Remove the pump from its housing.
3. Disconnect the pipe.
4. If necessary, slacken the three screws and remove the reservoir.

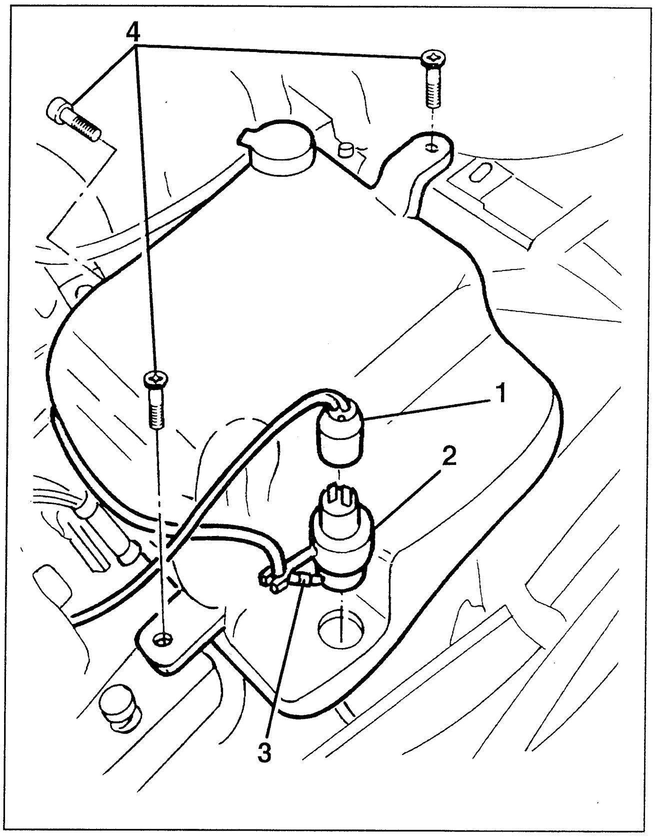

REMOVAL/REFITTING (2.0 V6 TB '98 version)

- Disconnect the battery.
- Open the boot.

1. Lift and lower the left-hand side boot panel.
2. Disconnect the pump electrical connection.
3. Drain the windscreen fluid reservoir.
4. Disconnect the pipe.
5. Release the retainers from the bracket and take the reservoir and pump.

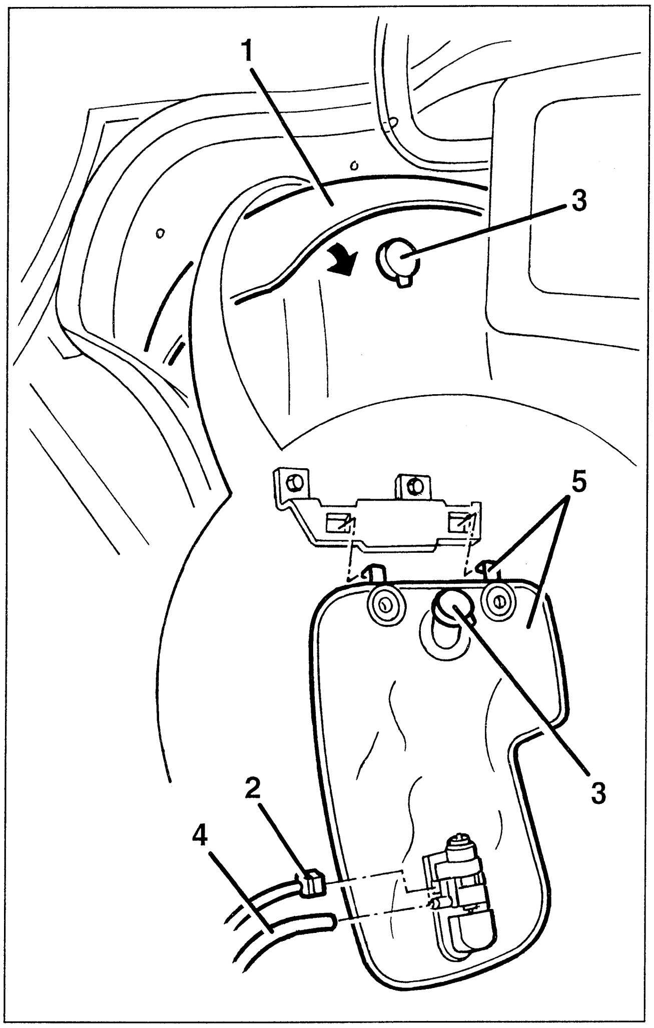

Refit the reservoir and pump by reversing the removal sequence.

HORNS

REMOVAL/REFITTING

- Disconnect the battery.
- Open the bonnet and remove the upper light cluster (see specific paragraph).

1. Slacken the fastening screw.
2. Remove the horn complete with bracket.

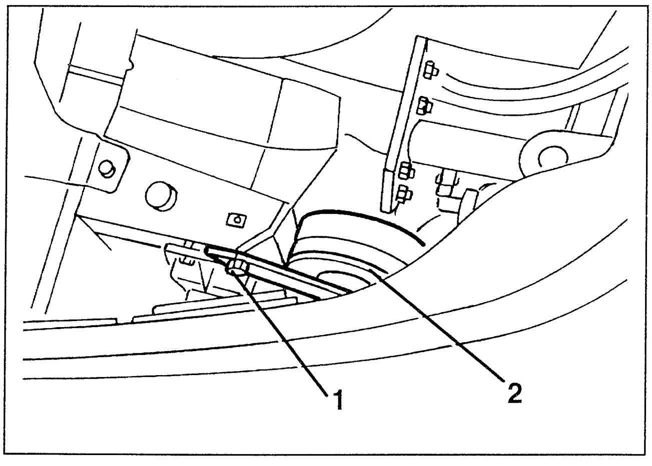

1. Disconnect the two electrical connections.
2. Slacken the nut and remove the bracket.
3. Retrieve the horn.

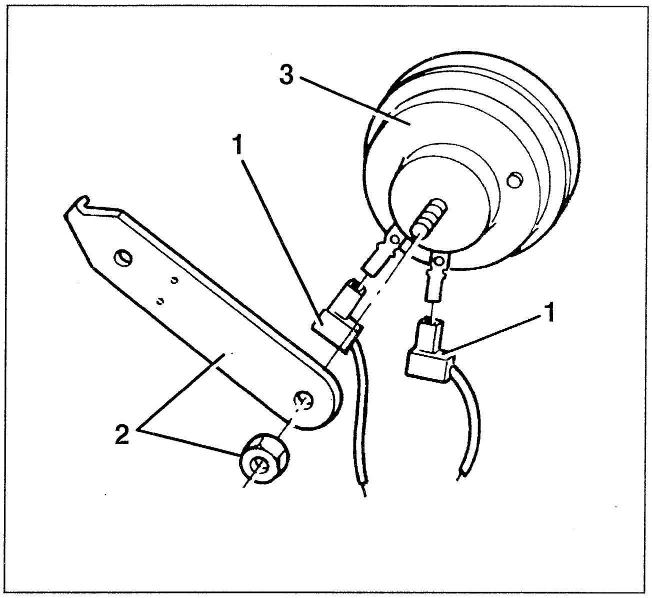

REMOVAL/REFITTING ('98 versions)

- Disconnect the battery.
- Open the bonnet.

1. Loosen the horn fastening nut.
2. Disconnect the electrical connections.
3. Remove the horns.

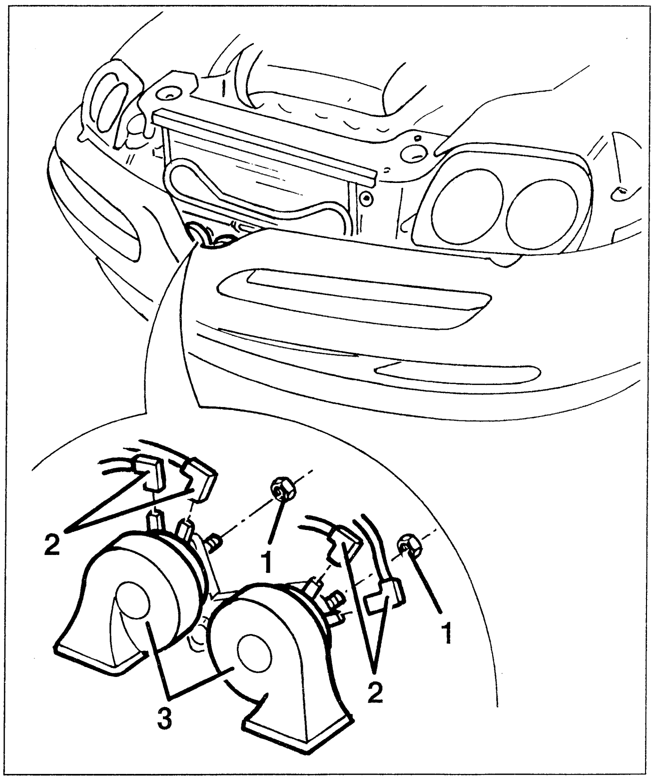

1. Adjust horn tone by means of the specific screw, if required.

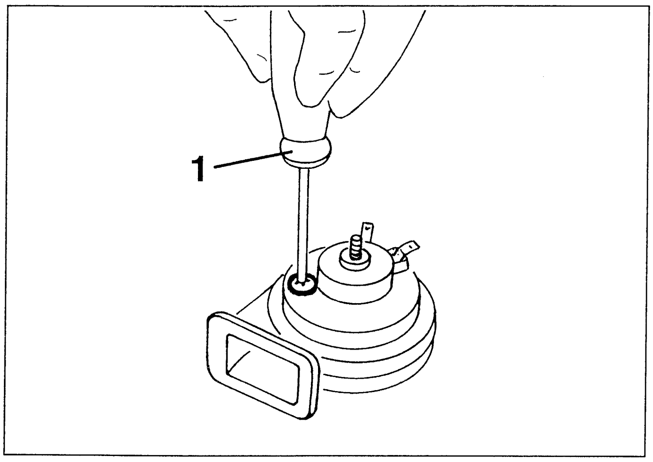

Refit the horns by reversing the removal sequence.

CIGAR LIGHTER

REMOVAL/REFITTING

1. Using tool 1.823.028.000 remove the cigar lighter body

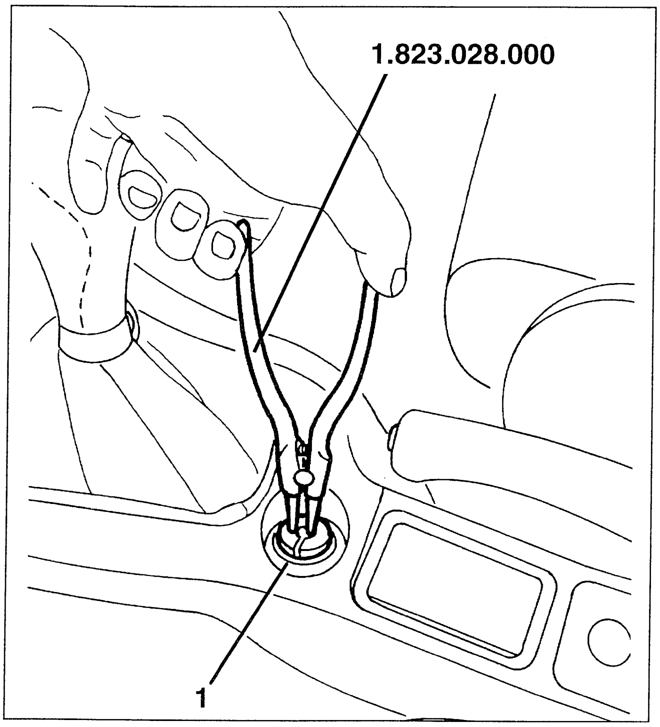

1. Disconnect the electrical connection.
2. Remove the bulb holder.
3. If necessary, remove the bracket and take out the bulb.

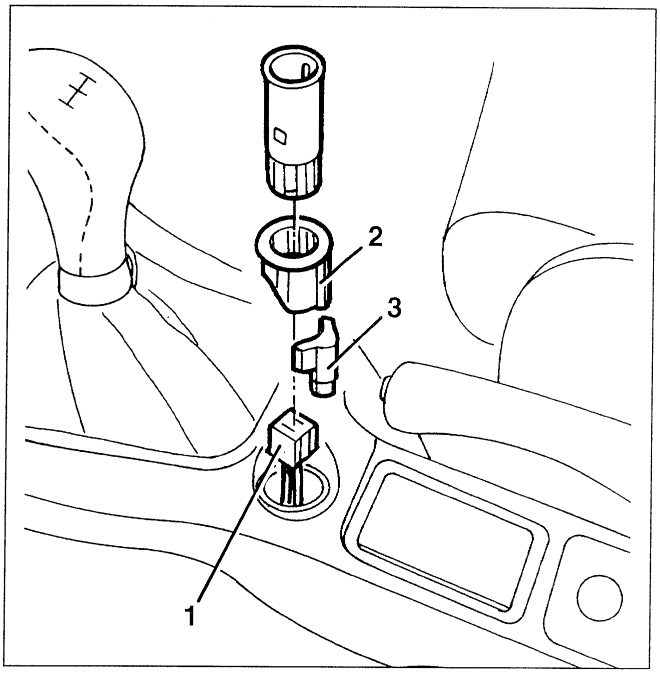

SOUND SYSTEM ('98 versions)

REMOVAL - REFITTING

– Disconnect the battery.
1. Fully insert the sound system detachment pins in their seats.
2. Remove the sound system.

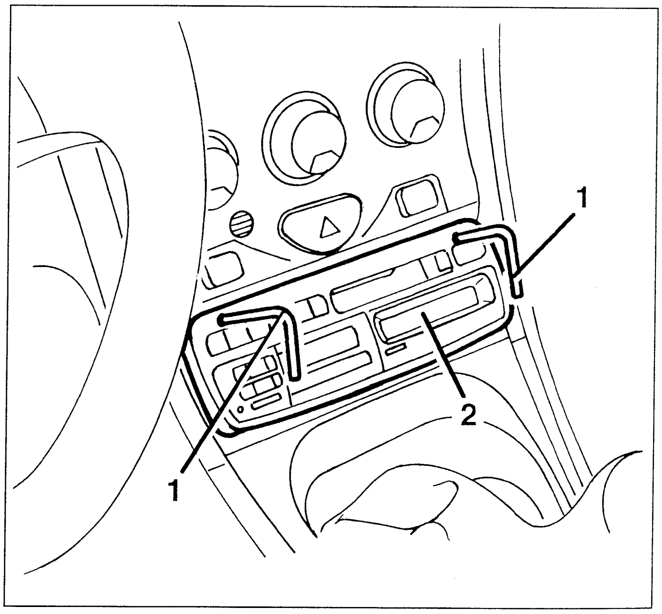

1. Remove the sound system pins.
2. Disconnect the electrical connections.
3. Disconnect the aerial wire connection.
4. Take the sound system.

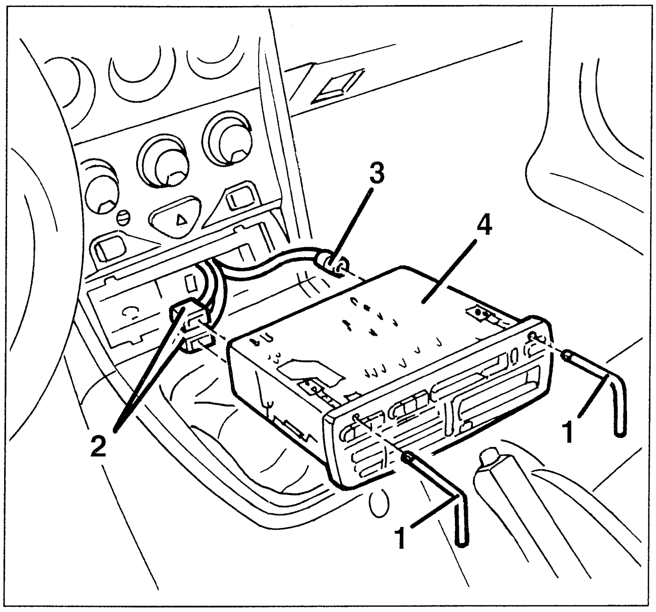

Refit the sound system by reversing the removal sequence.

NOTE: The pins are not required for refitting the sound system.

SPEAKERS

REMOVAL/REFITTING FRONT SPEAKERS

1. Prise and remove the speaker cover.
2. Slacken the 4 screws.
3. Remove the speaker.
4. Disconnect the electrical connection and retrieve the speaker.

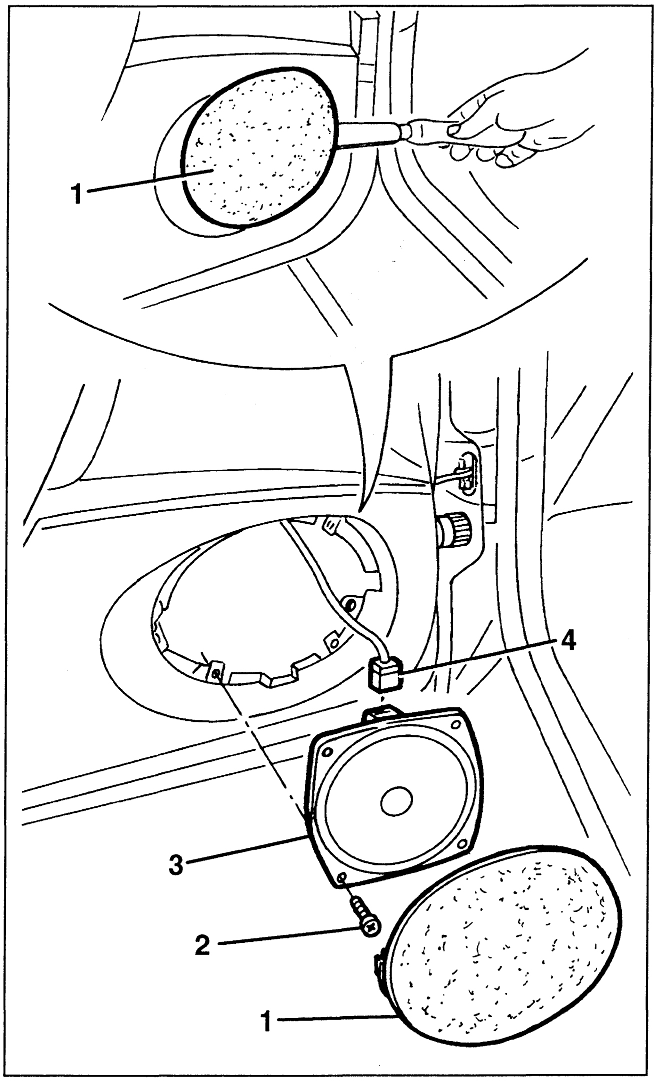

Refit the speaker reversing the sequence described for removal.

REMOVAL/REFITTING FRONT TWEETERS

- Remove the door panel (see specific paragraph).

1. Rotate and remove the complete speaker.

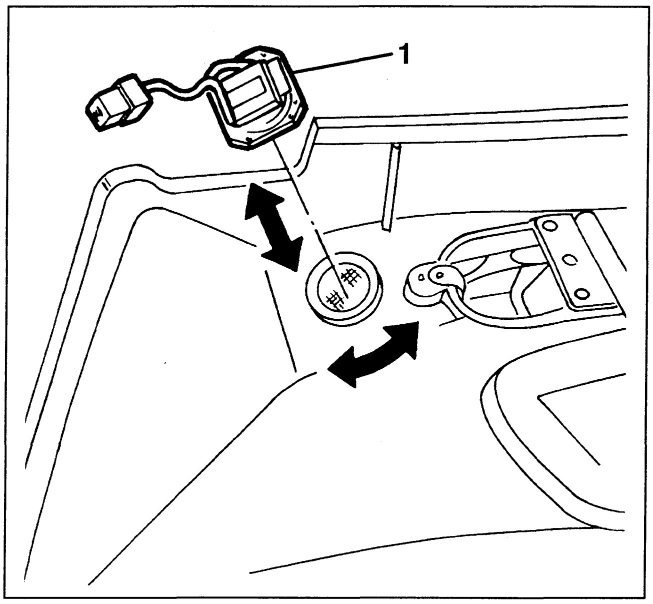

Refit the speaker reversing the sequence described for removal.

REMOVAL/REFITTING REAR "SUBWOOFER" (Spider)

1. Prise and remove the speaker cover.
2. Slacken the four fastening screws.
3. Remove the speaker just enough to disconnect the electrical connections, then remove it completely.

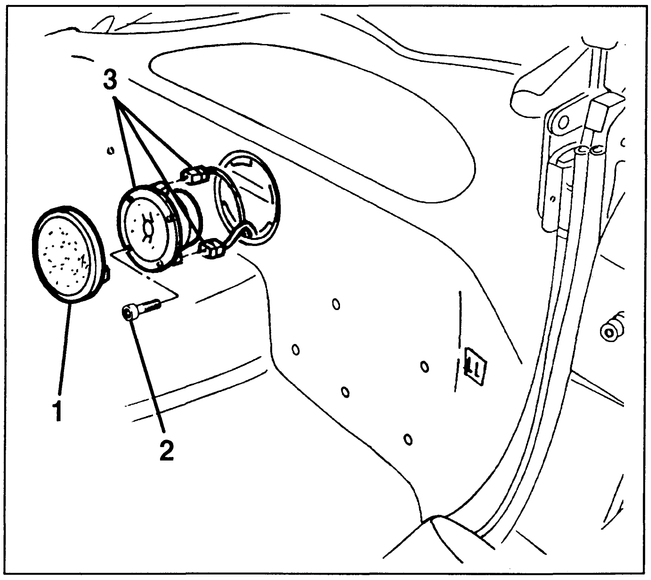

REMOVAL/REFITTING REAR SPEAKERS (GTV)

- Disconnect the battery.
1. Using tool 1.823.014.000 prise the speaker cover.
2. Slacken the four screws and raise the speaker.
3. Disconnect the electrical connection.
4. Retrieve the speaker.

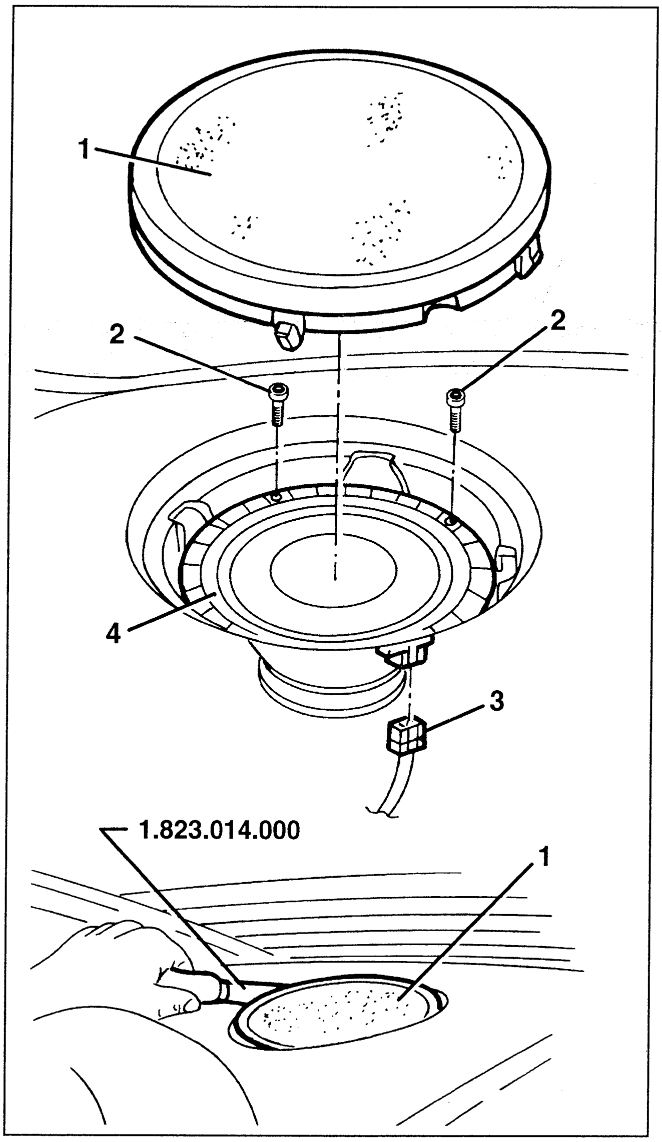

ELECTRIC AERIAL

REMOVAL/REFITTING

- Disconnect the battery, with the aerial down.
1. Move aside the left-hand luggage compartment trim.
2. Disconnect the electrical connection of the aerial motor.
3. Disconnect the connection of the coaxial cable.
4. Release the coaxial cable from the clamp.
5. Slacken the screw fastening the earth braid.
6. Release the earth braid from the clamps.
7. Slacken the screws, lower and retrieve the aerial unit
8. Retrieve the seal.

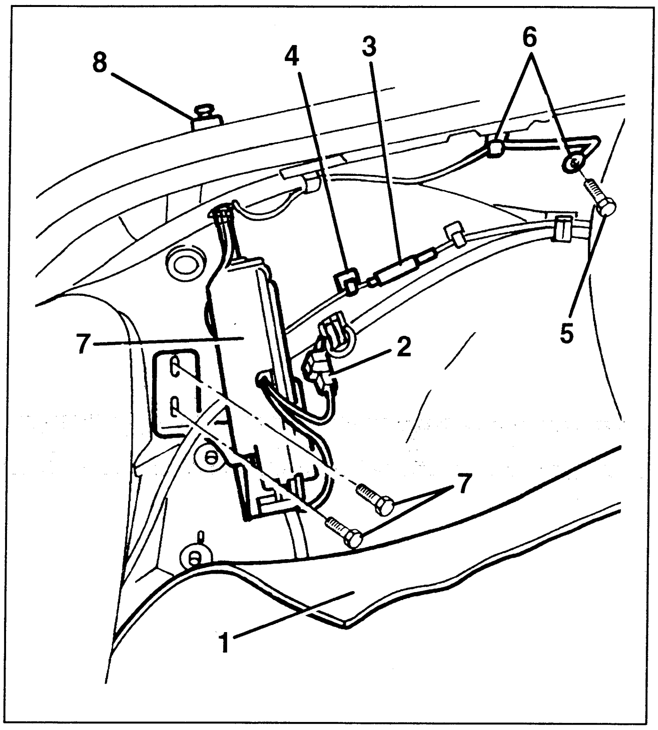

Refit reversing the sequence described for removal and adhering to the following instructions:

1. Lubricate the aerial and seal coupling area with vaseline.
2. Insert the water drain tube in the hole.

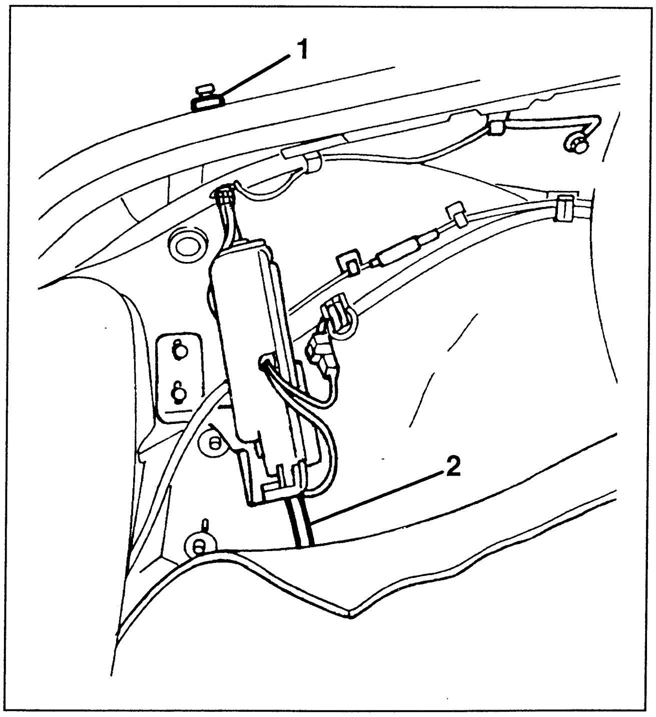

INSTRUMENT CLUSTER

MAIN PANEL

GENERAL DESCRIPTION

The main panel provides all the indications and information concerning the conditions of the vehicle which are indispensable for safe driving.
The cluster is of the analogue type with two generously- sized indicators for the speedometer and rev counter and a series of plainly visible warning lights which complete the information given to the driver.

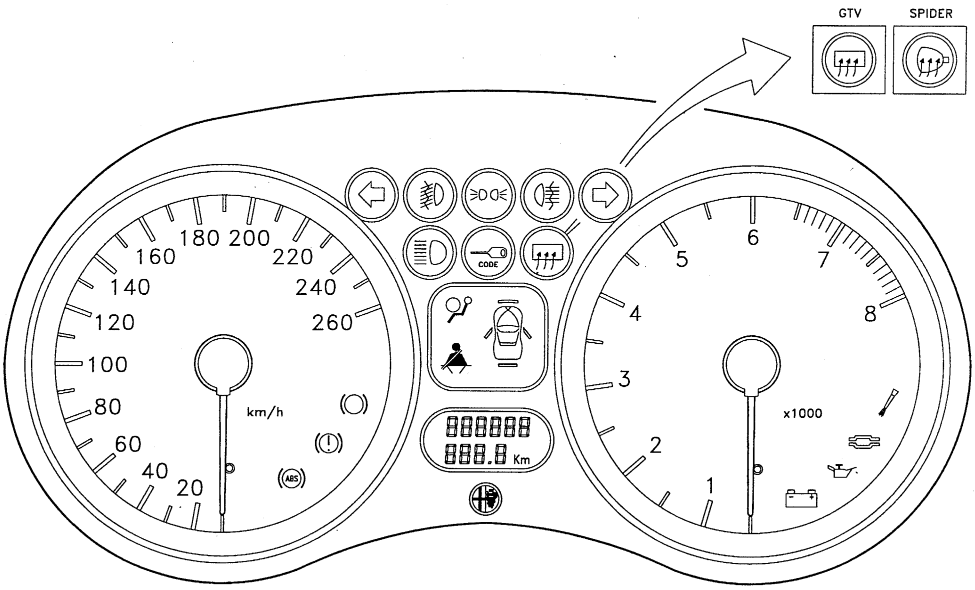

⇦	LH direction indicator
	fog lamps
⋝DO⋜	side lights
	rear fog guard
⇨	RH direction indicator
	high beams
CODE	electronic key system
	rearscreen and door mirror defrosting (GTV)
	door mirror defrosting (Spider)
	Air Bag system fault
	seat belts
	doors
(ABS)	ABS system failure
(!)	handbrake and brake fluid level, EBD system failure (*)
(O)	brake pad wear
- +	generator
	minimum oil pressure
	catalyst temperature (pnly for certain markets)
	injection fault (Check Engine)

(*) Present from '97 version

INSTRUMENT CLUSTER M.Y. '98

MAIN PANEL

GENERAL DESCRIPTION

The main panel provides all the indications and information concerning the conditions of the vehicle which are indispensable for safe driving.
The cluster is of the analogue type with two generously- sized indicators for the speedometer and rev counter and a series of plainly visible warning lights which complete the information given to the driver.

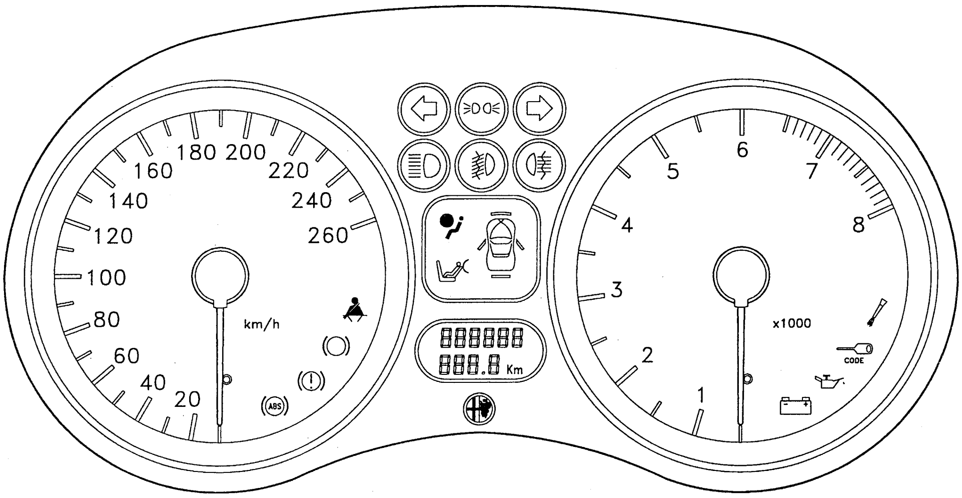

⇦ LH direction indicator

side/taillights

⇨ RH direction indicator

main beam highlights

foglights

rear foglight

Airbag failure system

passenger airbag deactivation

open doors and lids

(ABS) ABS system failure

(!) hand brake and brake fluid level

brake shoe wear

seat belts

generator

oil pressure gauge

CODE electronic key system (CODE)

injection failure (Check Engine)

REMOVAL/REFITTING

- Disconnect the battery
1. Slacken the two screws.
2. Remove the panel releasing the lower clamps.

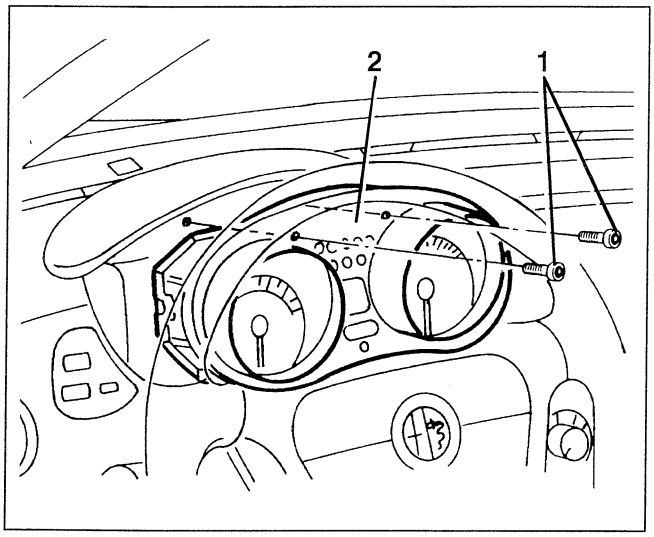

1. Disconnect the two electrical connections.
2. Release the wirings from the retainer brackets.
3. Retrieve the instrument cluster.

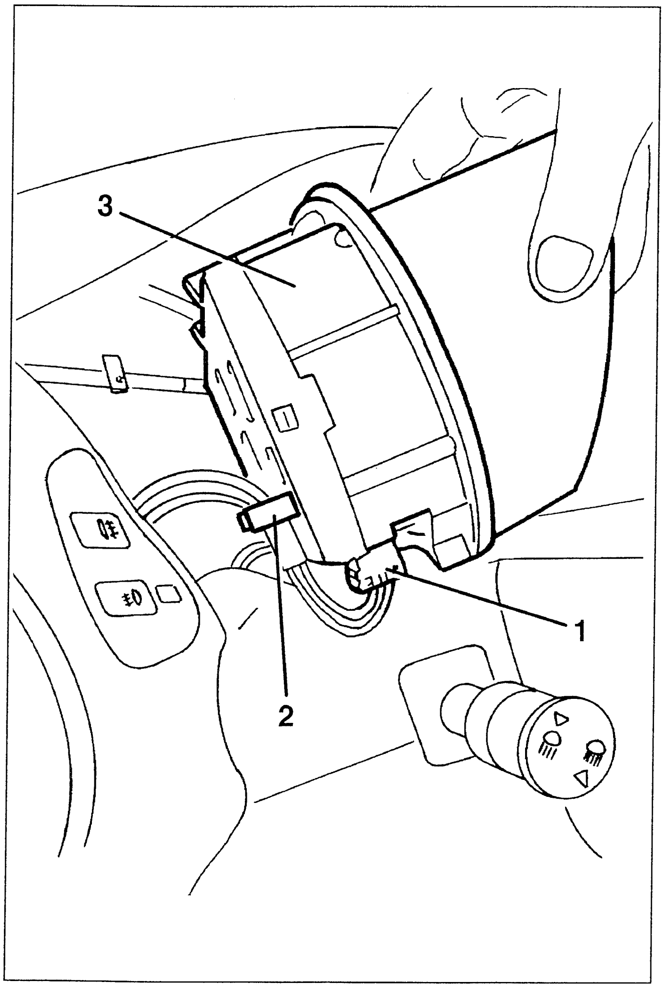

- If necessary change the bulbs withdrawing the bulb holder from the cluster and removing the bulbs.

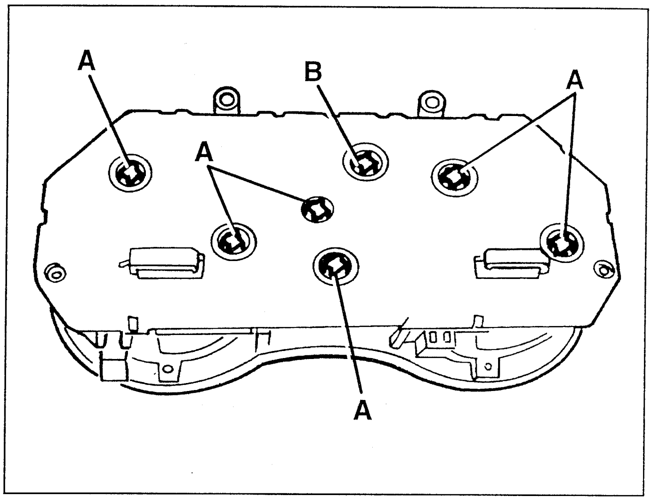

A - Cluster light bulbs
B - High beam warning light

AUXILIARY PANEL

GENERAL DESCRIPTION

The auxiliary panel is located in the centre of the dashboard and contains the coolant temperature gauge and the fuel level gauge with the associated warning lights.

It is completed by an analogue clock.

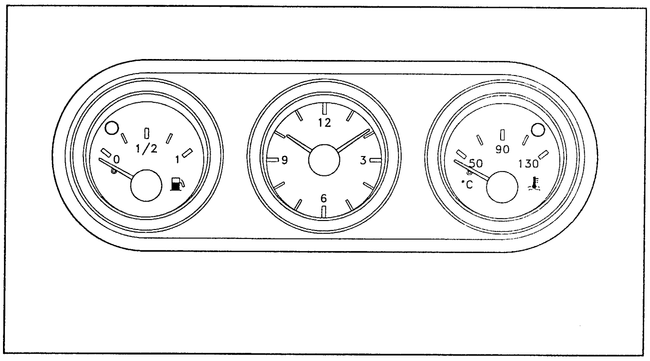

REMOVAL/REFITTING (to '97 versions)

- Remove the centre console (see Group 70)

1. If necessary change the bulbs withdrawing the bulb holder from the cluster and removing the bulbs.
2. Slacken the six screws and remove the auxiliary panel.

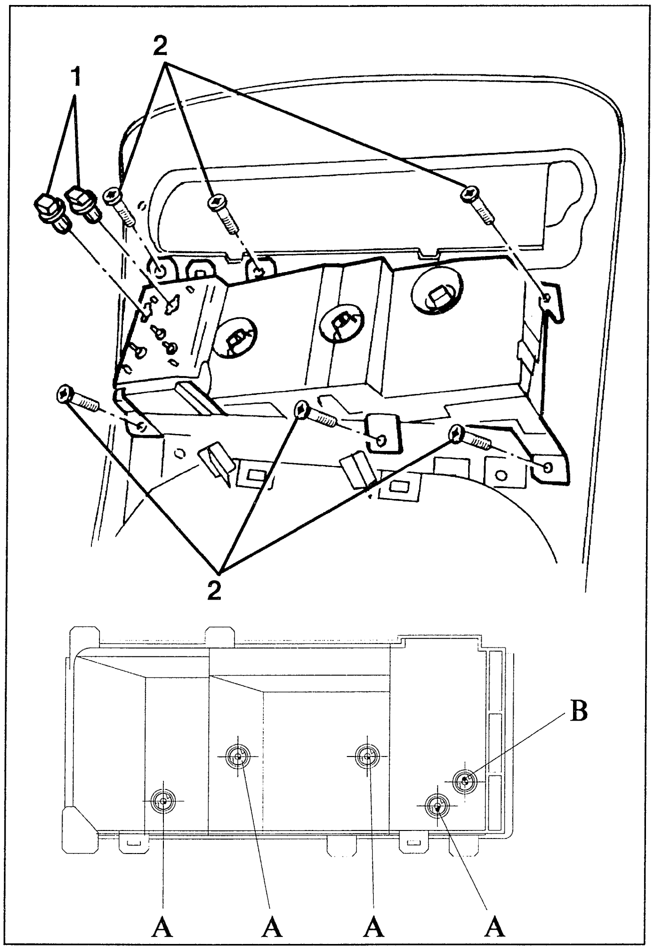

A - Panel lighting bulbs
B - Max. coolant temperature warning light

1. Levering on the retainer tabs, remove the front panel.
2. Levering on the retainer tabs, remove the rear cover.

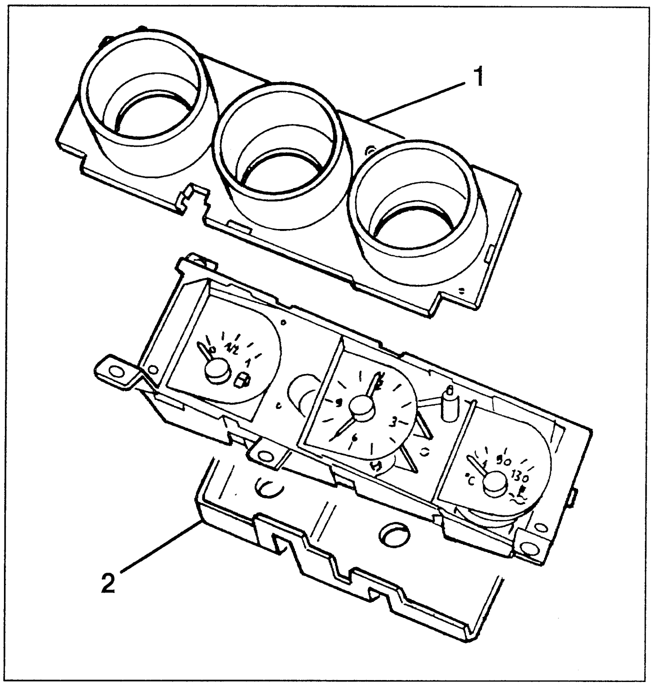

REMOVAL/REFITTING ('98 versions)

- Remove the central unit (see specific paragraph).

1. Loosen the screws.
2. Move the auxiliary instrument panel slightly aside.

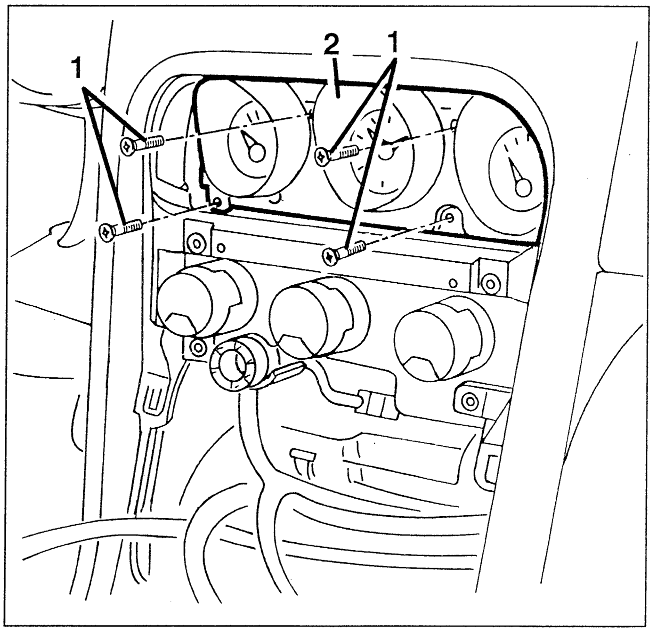

1. If required, turn the concerned bulb holder and extract it; remove the bulb from the bulb holder (clipped in).
2. Disconnect the electrical connection.
3. Take the auxiliary instrument panel.

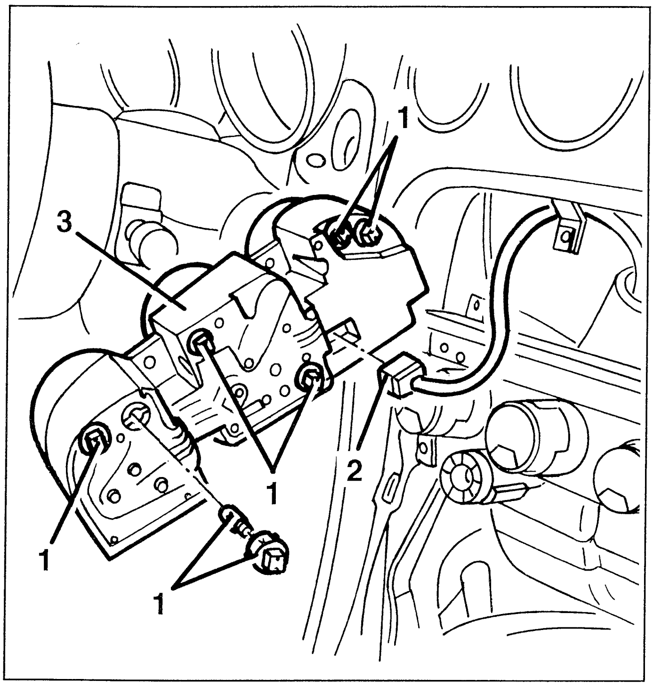

Auxiliary instrument panel disassembly (if required)

1. Loosen the screws.
2. Remove the lens.
3. Loosen the three retainers (A) and remove the plate.
4. Remove the seals.
5. Loosen the three nuts .
6. Remove the coolant temperature gauge.
7. Slightly extract the clock.
8. Disconnect the electrical connection and take the instrument.
9. Loosen the screws.
10. Remove the fuel level gauge.

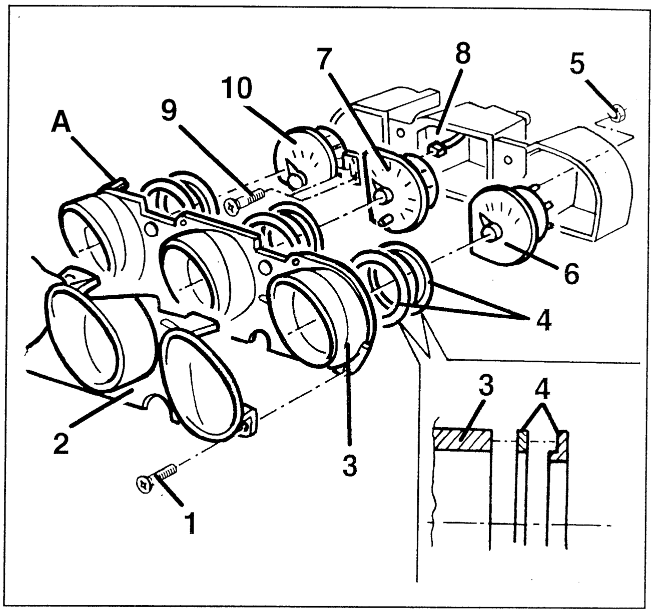

Reassemble (if disassembled) and refit the auxiliary instrument panel by reversing the removal sequence.

CONTROLS AND SWITCHES

STEERING COLUMN LEVER UNIT

REMOVAL/REFITTING

- Disconnect the battery.
- Remove the steering wheel and steering column covers (see Group 41).

1. Slacken the two screws.
2. Withdraw the lever unit and disconnect the electrical connections.
3. Retrieve the lever unit complete.

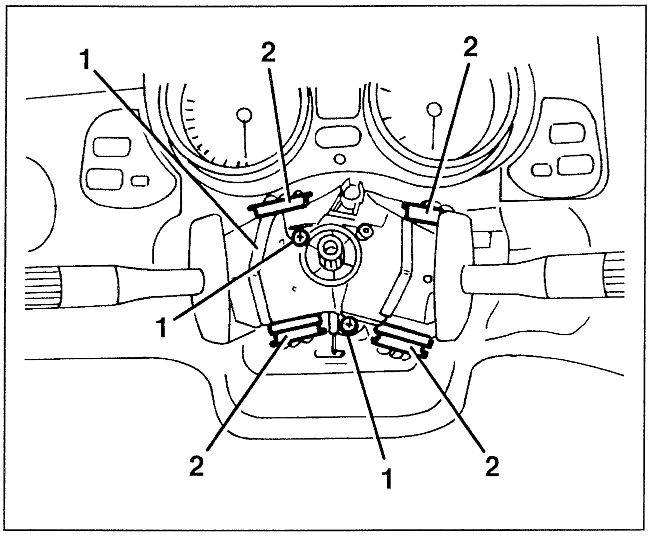

Refit the lever unit reversing the sequence followed for removal.

HAZARD WARNING LIGHTS CONTROL SWITCH (to '97 versions)

REMOVAL/REFITTING

- Remove the centre console (see Group 70).

1. Slacken the two screws.
2. Remove the connection bracket.
3. Retrieve the hazard warning lights control switch.

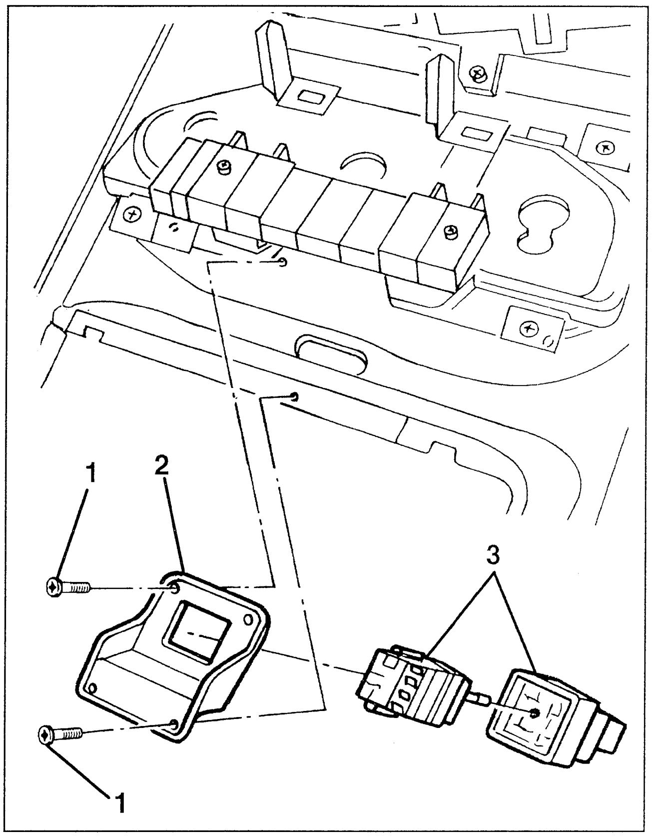

HAZARD LIGHT / FOG LIGHT / REAR FOG LIGHT SWITCHES ('98 versions)

REMOVAL - REFITTING

- Remove the central unit (see specific paragraph).

1. Loosen the switch assembly fastening screws.
2. Remove the switch assembly.

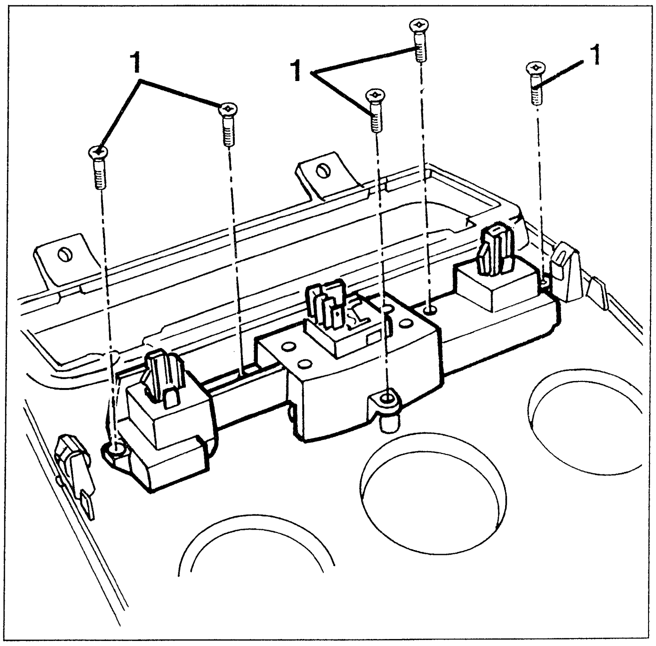

1. Remove the switches from the bracket.

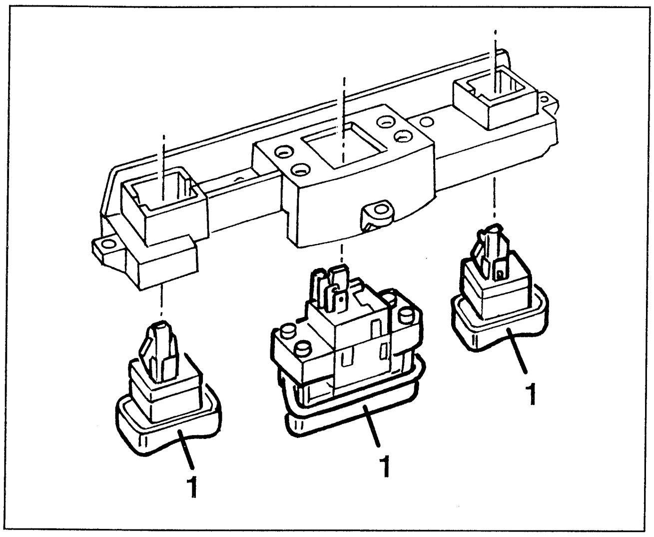

Refit the switches by reversing the removal sequence.

SETS OF SWITCHES AT SIDE OF PANEL

REMOVAL/REFITTING (to '97 versions)

- Disconnect the battery.
1. Using tool 1.823.014.000 prise the switch panel.
2. Disconnect the electrical connections.
3. Retrieve the switch panel.

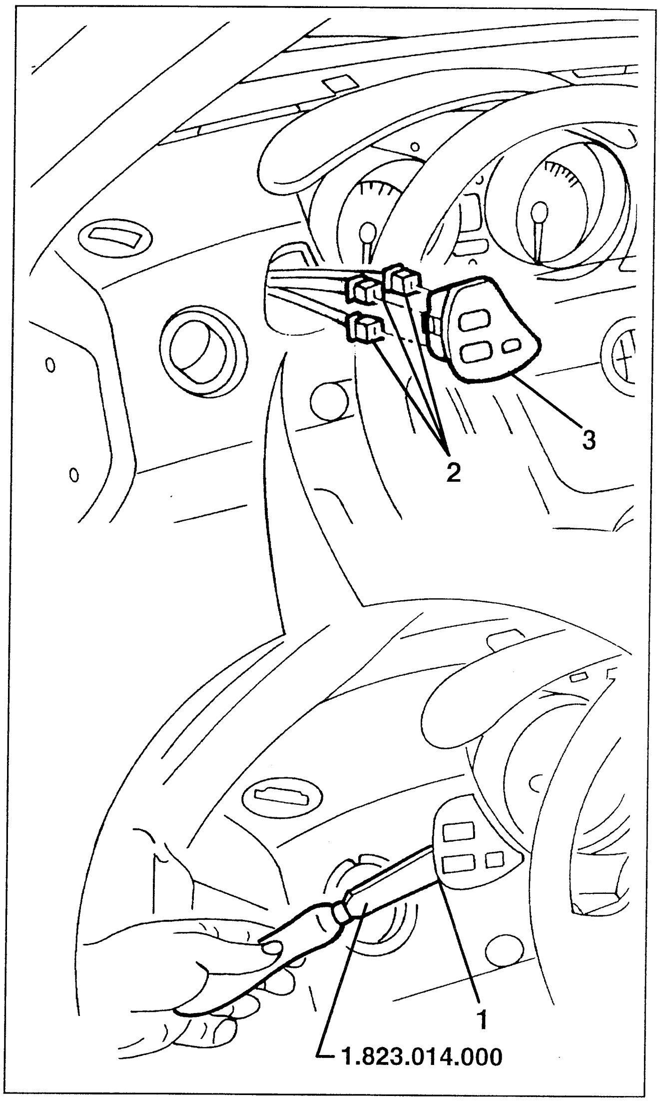

1. Working on the tabs prise the outer cover.
2. Retrieve the switches.

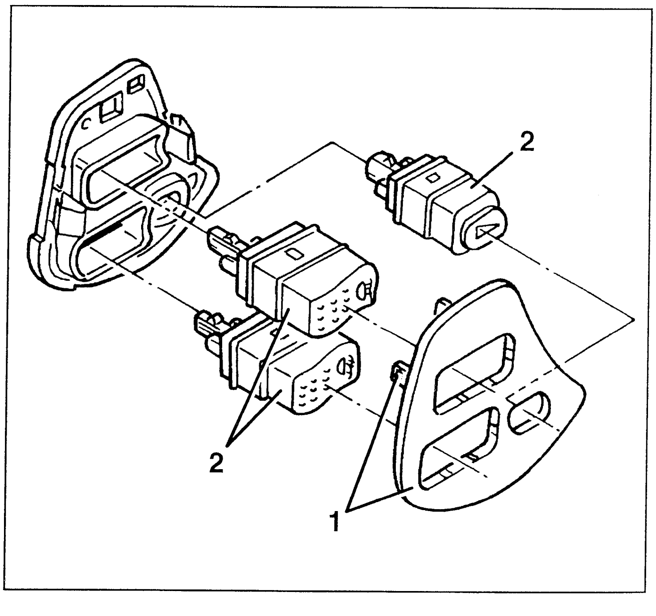

REMOVAL/REFITTING (to '98 versions)

- Disconnect the battery.
1. Use tool 1.823.014.000 to lift the switch board.
2. Disconnect the electrical connections.
3. Take the switch board.

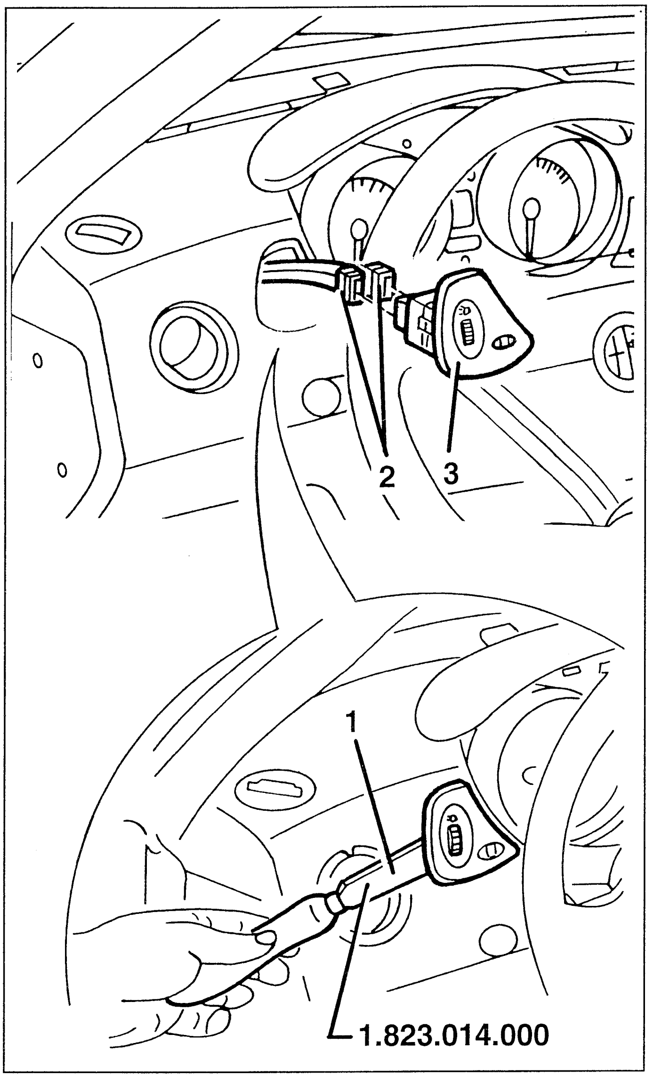

1. Press the tabs and remove the external plate.
2. Take the switch and variator.

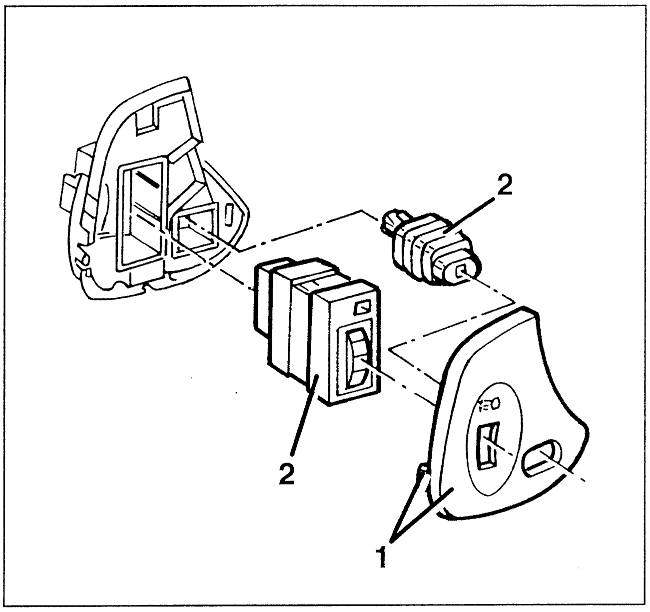

POWER WINDOW SWITCHES

REMOVAL/REFITTING

- Disconnect the battery
1. Using tool 1823.014.000 prise the switch plate off the door panel.

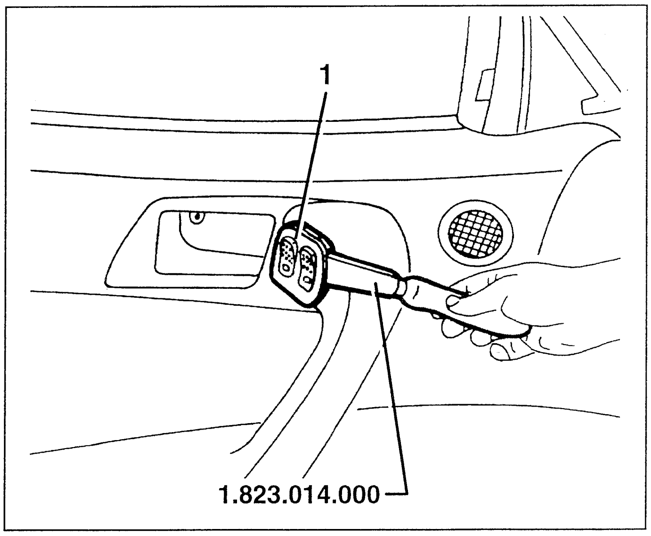

1. Disconnect the electrical connections from the power window switches and remove the plates.

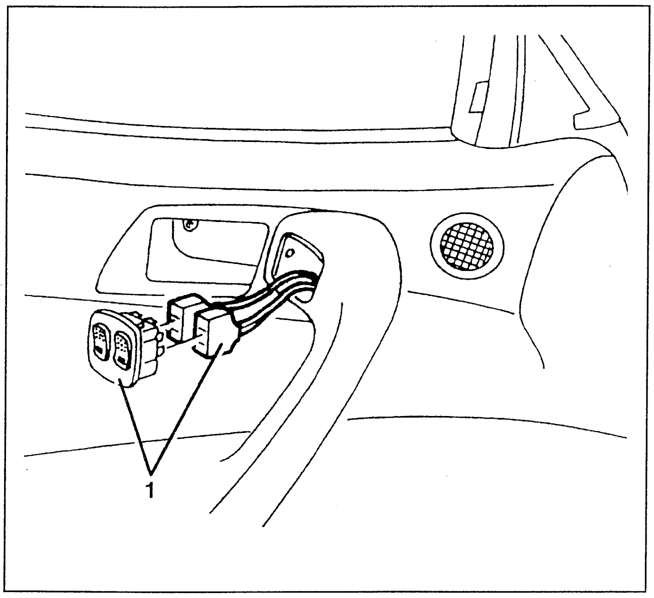

1. Working on the tabs prise off the outer plate.
2. Retrieve the switches.

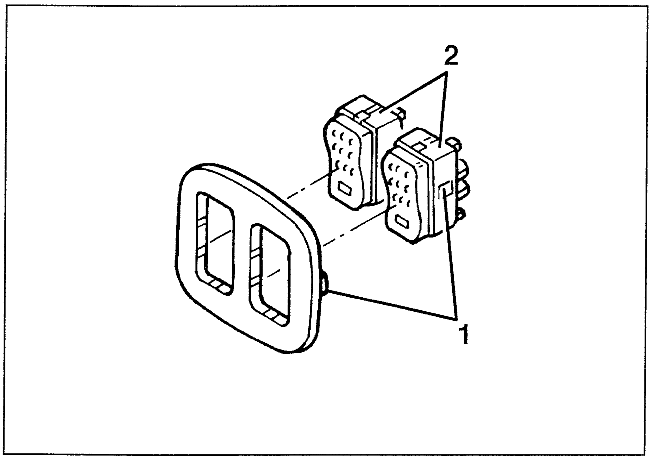

SUN ROOF CONTROL SWITCH (GTV)

Operate as listed for the headlamp aiming switch (see specific paragraph)).

TOP CONTROL SWITCHES (SPIDER)

REMOVAL/REFITTING

- Disconnect the battery
1. Prise the switch panel using tool 1.823.014.000
2. Disconnect the electrical connections.
3. Retrieve the switch panel.

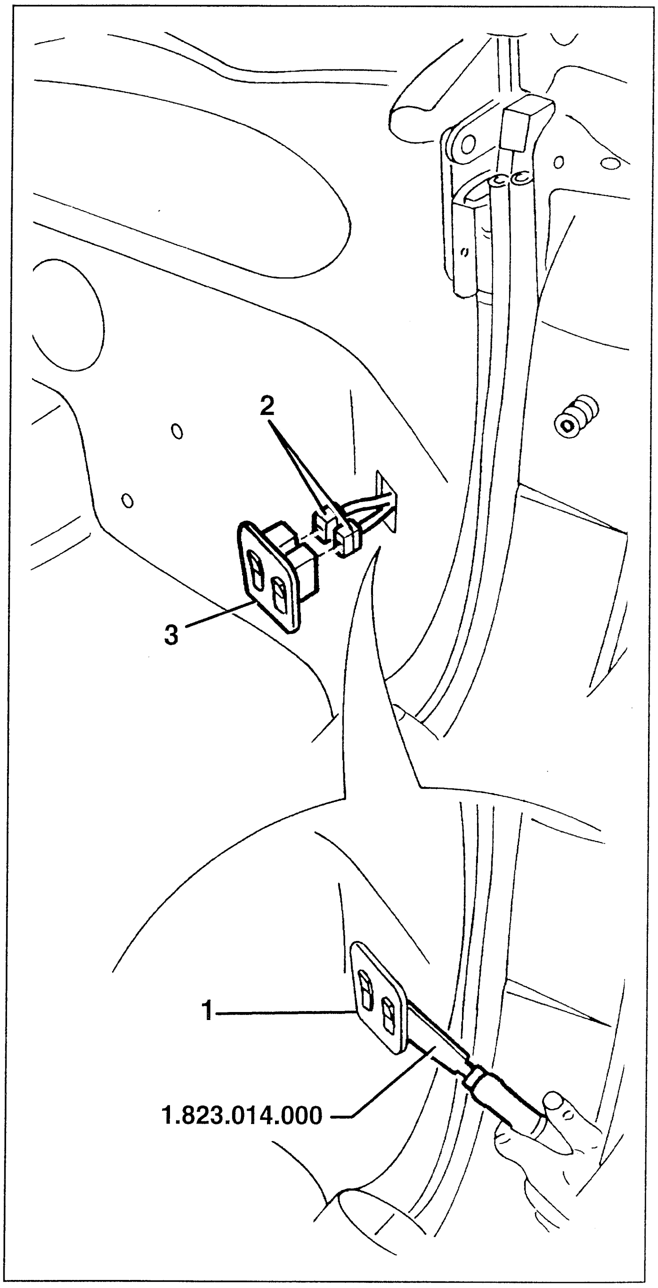

1. Working on the tabs prise the outer plate.
2. Retrieve the switches.

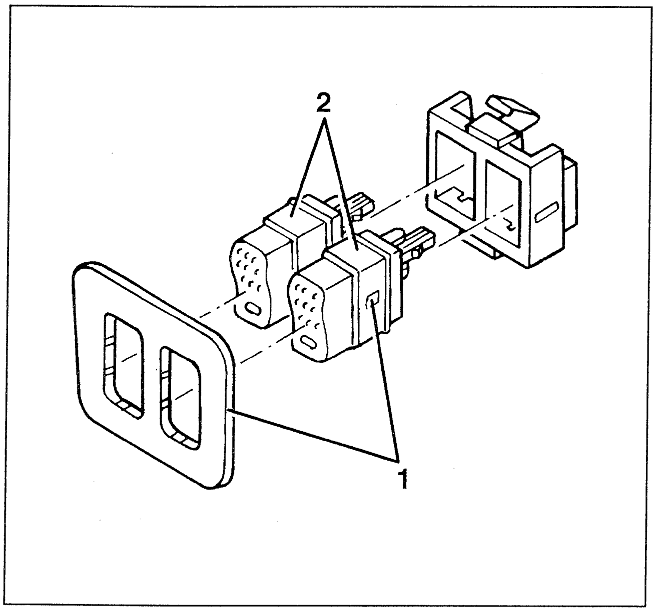

DOUBLE DOOR MIRROR ADJUSTMENT SWITCH

REMOVAL/REFITTING (to '97 versions)

– Disconnect the battery

1. Prise the switch panel off its housing on the centre tunnel
2. Disconnect the electrical connection and retrieve the panel.

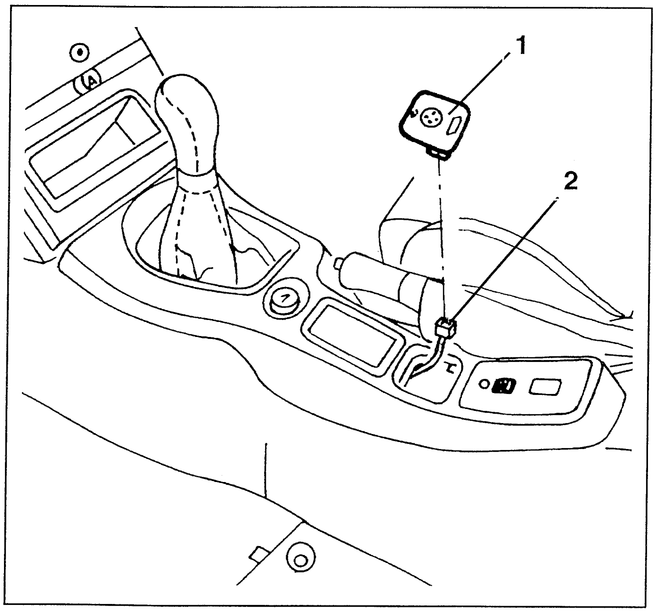

1. Work on the side tabs and separate the panel.
2. Retrieve the switch.

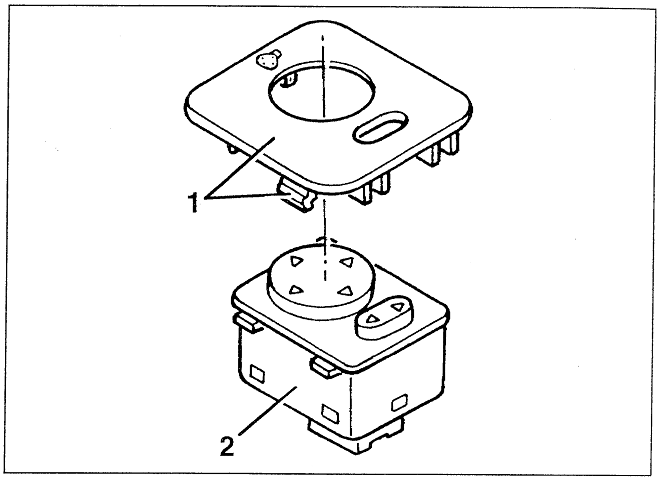

REMOVAL/REFITTING ('98 versions)

– Disconnect the battery.

1. Lift the rearview mirror/electrical hood switch plate from its seat on the central tunnel from the side shown by the arrow.
2. Disconnect the electrical connections and take the plate and switches.

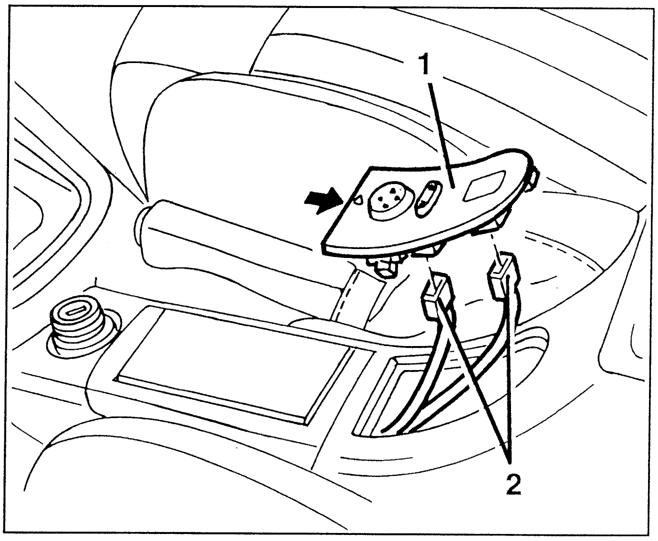

1. Remove the switch from the plate.

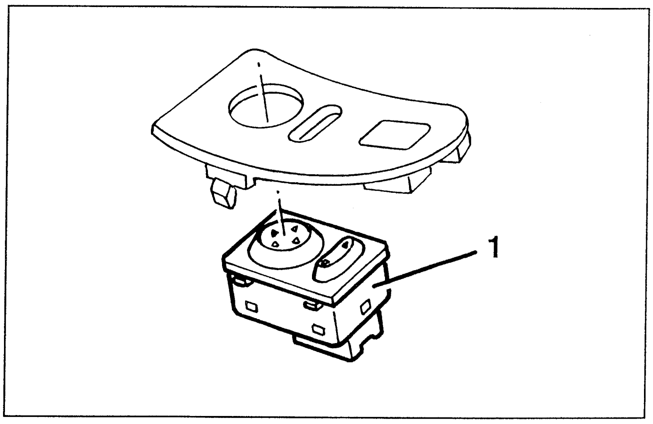

ALARM SYSTEM

For the description and diagnosis of this system refer to "Group 55 - ELECTRIC SYSTEM DIAGNOSIS - Section "Alarm System".

CONTROL UNIT-SIREN

REMOVAL/REFITTING

- With the alarm deactivated, disconnect the battery.
- Open the bonnet and remove the engine compartment right-hand cover (see Group 70).

1. Slacken the screw fastening the bracket supporting the climate control unit and the alarm system control unit-siren.
2. Slacken the bolt.
3. Remove the bracket complete.

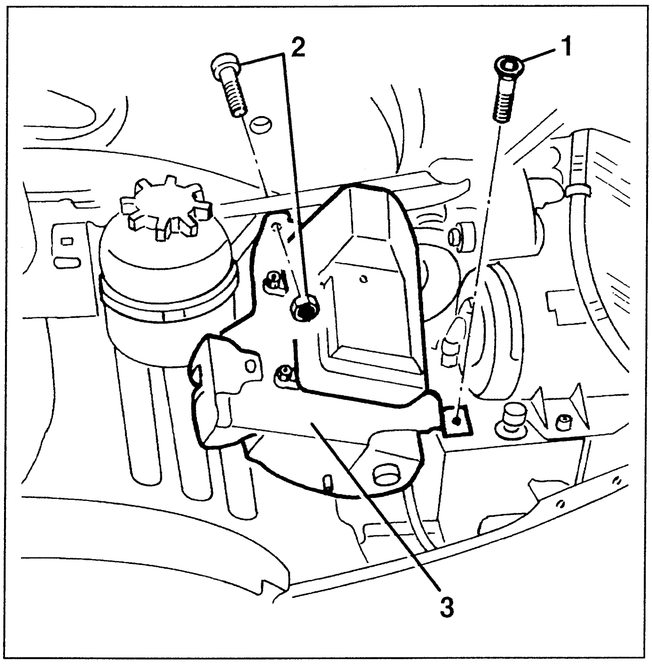

- Overturn the bracket.

1. Slacken the nuts.
2. Open the support tabs and remove the control unit-siren group.
3. Disconnect the connections and retrieve the group.

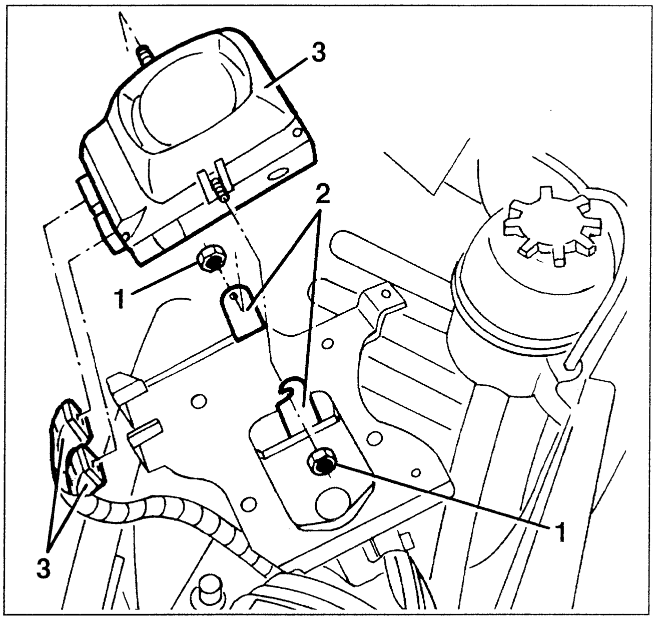

Refit the control unit-siren group reversing the sequence followed for removal.

REMOTE CONTROL RECEIVER UNIT

- Disconnect the battery.

1. Remove the passenger compartment roof lamp (see specific paragraph).
2. Slacken the two screws fastening the frame.
3. Remove the frame.

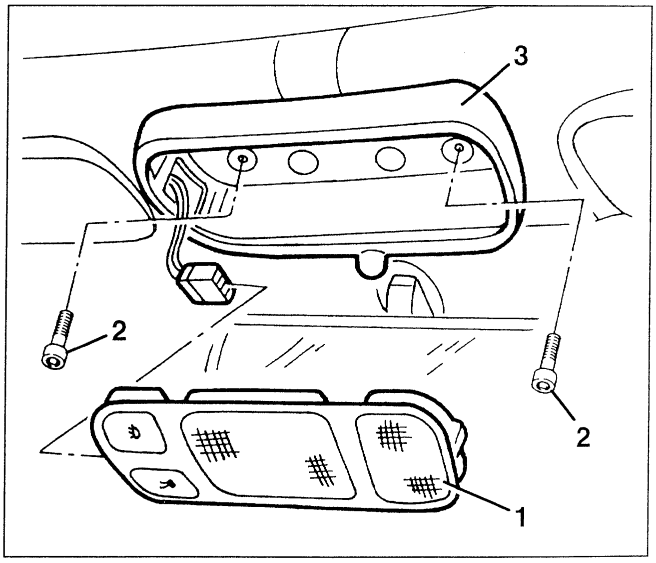

1. Disconnect the electrical connection.
2. Slacken the three screws.
3. Remove the receiver unit base.
4. Retrieve the receiver element below.

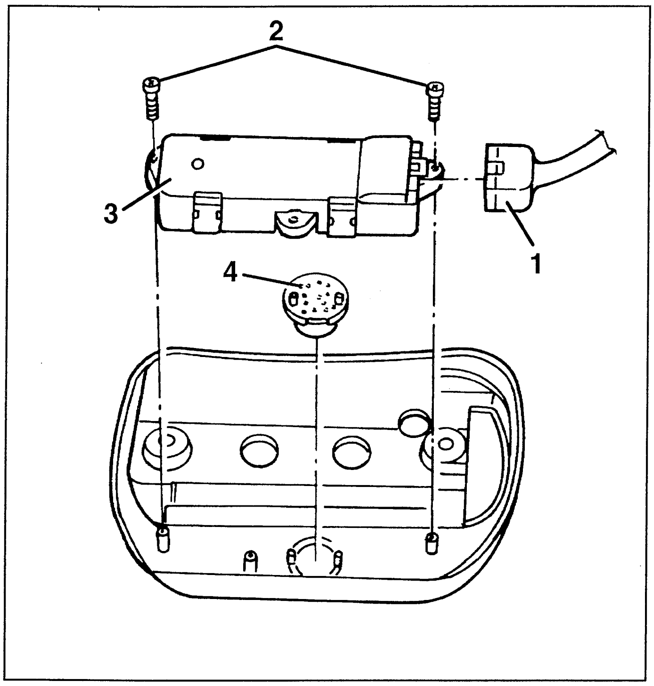

Refit the receiver unit reversing the sequence followed for removal.

BONNET OPEN DETECTION SWITCH

REMOVAL/REFITTING

- With the alarm deactivated, disconnect the battery and open the bonnet.

1. Slacken the fastening screw.
2. Raise the switch.
3. Disconnect the connection and retrieve the switch.

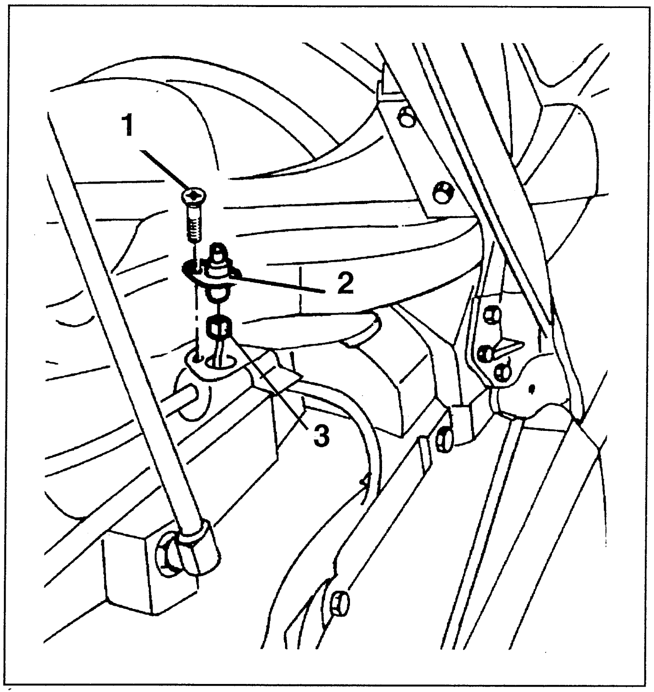

AIR BAG AND PRETENSIONERS

GENERAL DESCRIPTION

This car is fitted with an electronic safety system which, in the event of an impact, operates one or two Air Bags and two safety belt pretensioners.

The **AIR BAG** is a passive safety device formed of one or two cushions which automatically inflate between the body of the occupants of the front seats of the vehicle and the front structures of the passenger compartment, in the event of a head- on crash.

The safety belts **PRETENSIONER** is a pyrotechnic device integrated in the safety belt buckle, which operates in the event of a head-on collision taking up the inevitable slack in the belts caused by the action of the weight of the body or its adherence to the seat back.

The system as a whole comprises the following components:

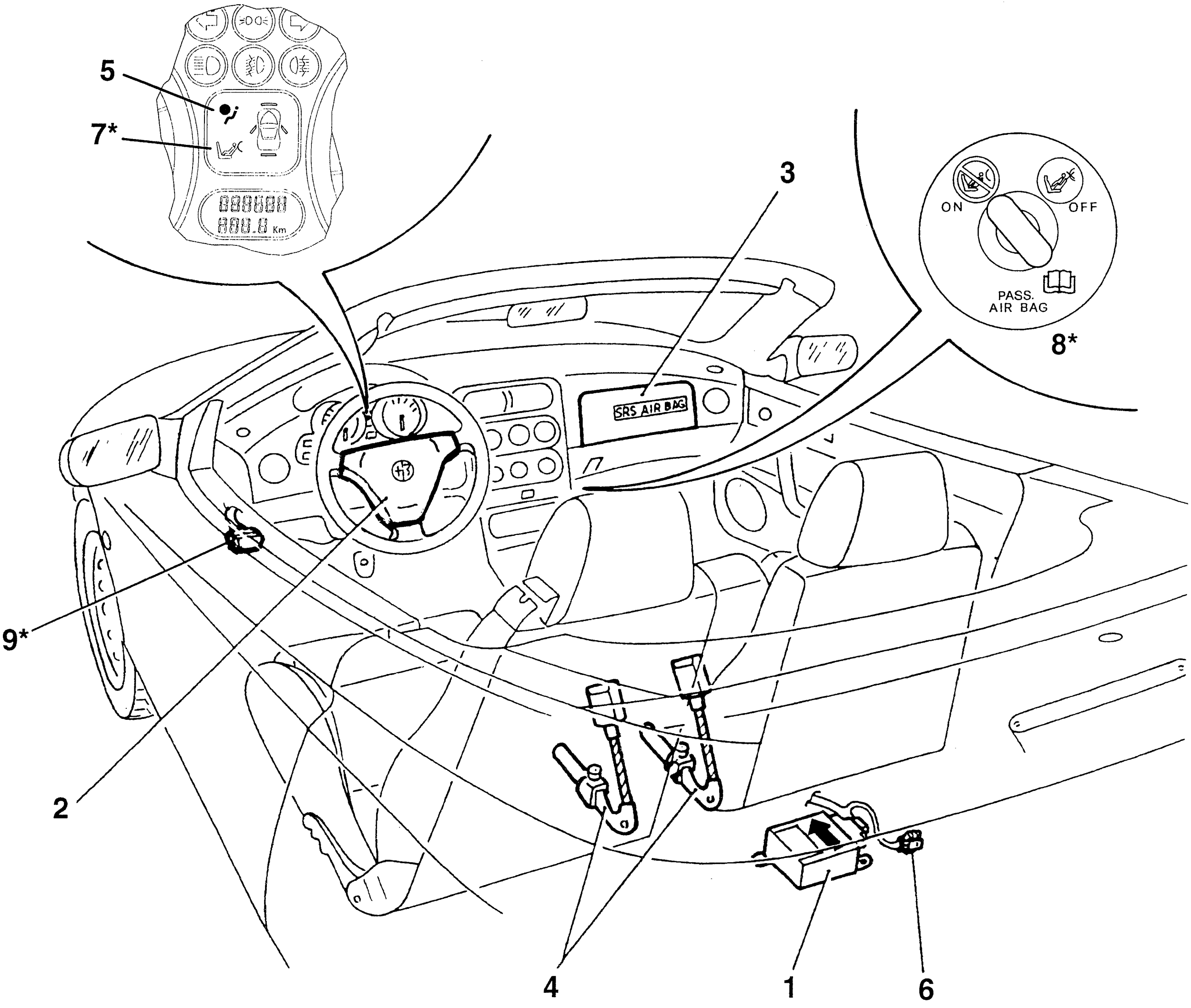

1. ECU.
2. Driver side airbag module.
3. Passenger side airbag module.
4. Seat belt pretensioners.
5. System failure and diagnostic code warning l ight on instrument panel
6. ALFA TESTER connector
7. Passenger side airbag deactivated warning light on instrument panel (*)
8. Passenger side airbag deactivating device on instrument panel (*)
9. Combined diagnostic connector (*)

(*) with effect from Model Year ‘98

The electronic control unit is equipped with suitably calibrated deceleration sensors, through which it detects a collision situation and triggers the reaction of a chemical compound which produces nitrogen through two electric detonators. The gas inflates the two synthetic fibre cushions respectively housed at the centre of the steering wheel and in a compartment of the dashboard in front of the passenger.

Simultaneously, the control unit triggers the pretensioners which prevent the belts from unreeling by a piston operated by a gas generator which pulls the steel cable fastening the buckle.

PASSENGER SIDE AIRBAG DEACTIVATION

The passenger side airbag can be deactivated voluntarily or temporarily by means of the vehicle key. The control switch is located on the side cabinet panel on passenger side and activates (ON) or deactivates (OFF) the passenger side airbag. In this case, the ECU excludes passenger side airbag activation but enables normal operation of the respective pretensioner. This ensures that if a passenger is on board and the switch has been left OFF by mistake, the airbag will not be triggered but at least the pretensioner will operate normally. When the key on OFF, the ECU will also activate the respective “Passenger side air bag deactivated” warning light on the instrument panel.

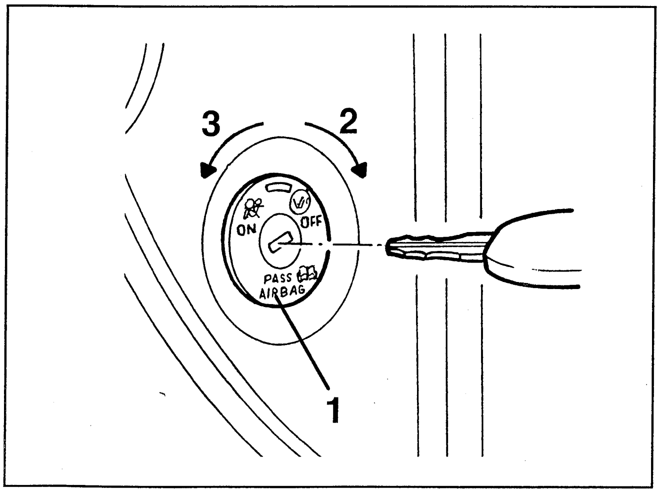

1 *Key switch*
2 *OFF: Passenger side airbag deactivated*
3 *ON: Passenger side airbag activated*

For further details see "GROUP 55 - ELECTRIC SYSTEM DIAGNOSIS - Section "Air Bag and Pretensioners".

SYSTEM COMPONENTS

ELECTRONIC CONTROL UNIT

(see "GROUP 55 - ELECTRIC SYSTEM DIAGNOSIS)

DRIVER’S SIDE AIR BAG MODULE

The specifically designed steering wheel is fitted with side controls (3) for the horns and the central part is used to accommodate the actual Air Bag module.

It is fastened by two special screws (2) to the rear of the steering wheel.

The module (1) consists of a steel plate covered by a plastic container which forms the centre of the steering wheel. The container encloses the suitably folded cushion and the inflating device. The inflating device contains an electrically activated detonator and a chemical compound (Sodium azide) to produce gas (Nitrogen).

The rear of the cushion has holes which are sized to allow the cushion to deflate immediately after deployment.

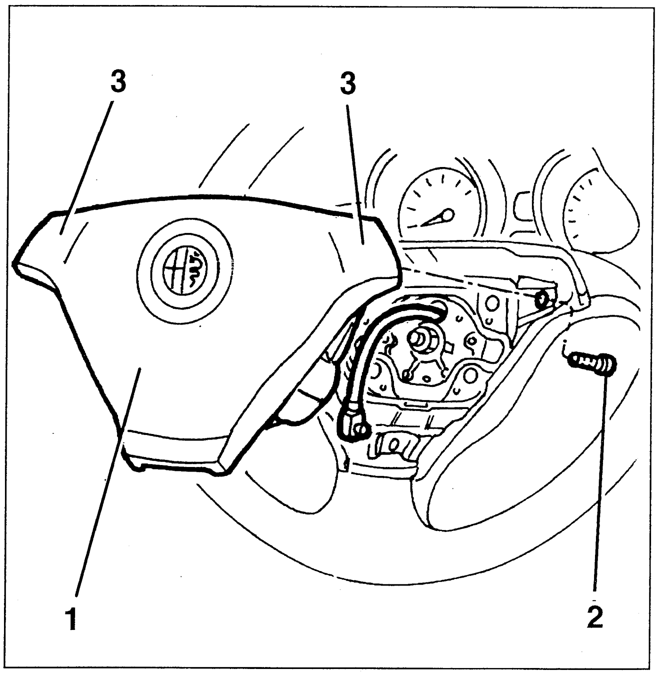

The upper part of the module has pre-breakage lines which allow the inflated cushion to come out quickly leaving the module fixed on the steering wheel without the pre-established detached parts.

CLOCK SPRING DEVICE

The Clock Spring device (1) is installed on the steering column lever unit and allows the Air Bag module connection cables and the electric horn connection to follow the rotation of the steering wheel without breakage or damage.

The device comprises two plates:

- the lower one is fastened to the steering wheel lever unit by an internal grooved profile;
- The upper one is made integral with the steering wheel by a torsion spring (2) which also has a safety purpose.

The spring (2) allows rotation of the spiral cable with the steering wheel.

When the spring (2) is removed, pin (3) comes out and prevents rotation between the steering wheel and the device; in fact the upper plate, no longer restrained to the steering wheel, might turn and and unwind or wind the spiral cable incorrectly, and this might result in breakage of the cable itself.

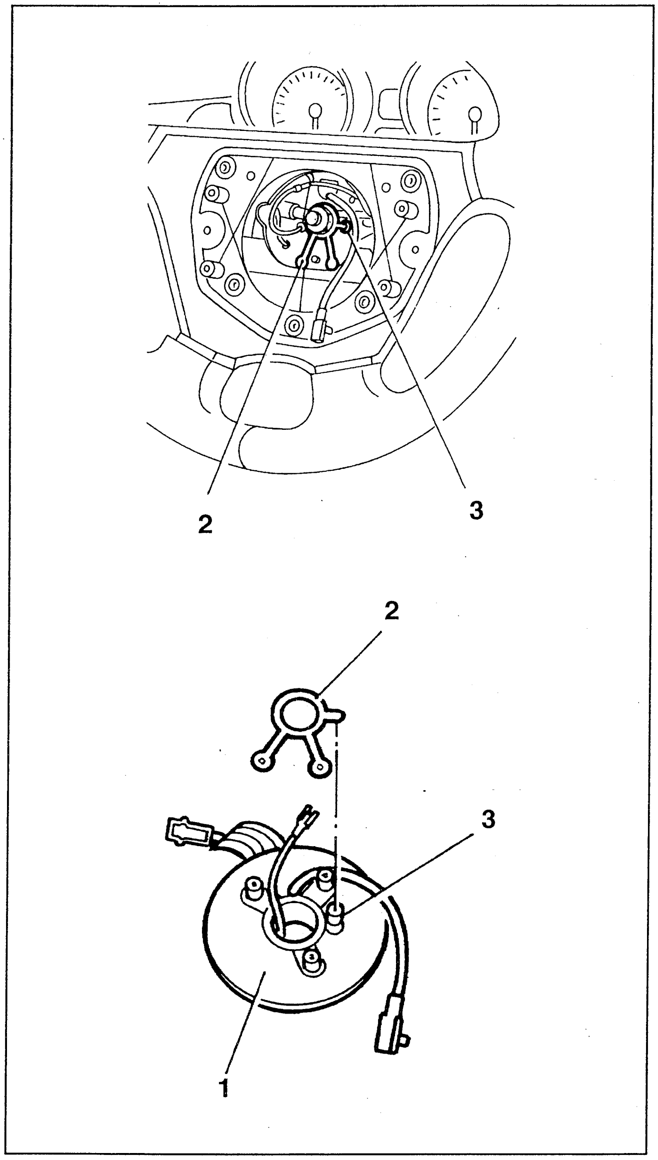

WARNING : when the device has been removed, if for any reason the upper plate is rotated with respect to the lower one - for example pin (3) pressed inadvertently - it becomes impossible to ascertain their exact respective position.

In this case the two plates must be turned to their ends - pressing pin (3) - and the cable should be rewound for 3.5 turns: this position corresponds to half of the winding, therefore the device must then be refitted on the car with the wheels exactly in the straightahead position.

PASSENGER'S SIDE AIR BAG MODULE

The passenger Air Bag module is also enclosed in a container which is fastened on a metal frame inside the dashboard above the glovebox.

The composition and operating principle are the same as for the driver's side module.

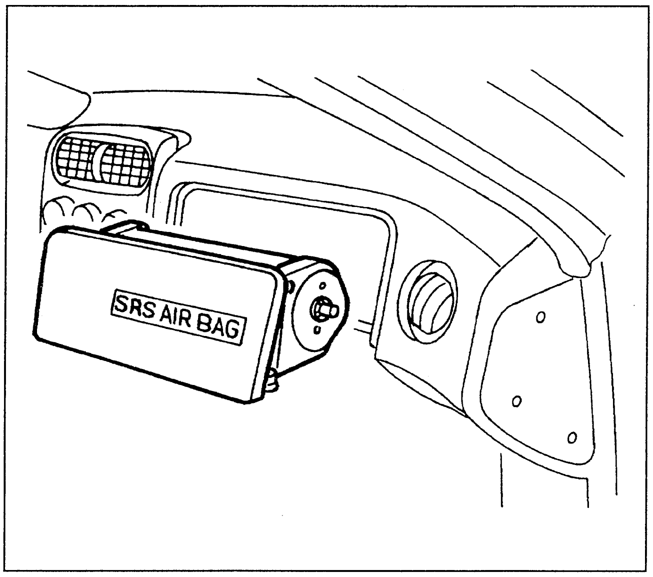

SEAT BELT PRETENSIONERS

The seat belt pretensioner is a pyrotechnic device integrated in the buckle that hooks onto the belt which, in the event of a head-on collision takes up the inevitable slack in the belt caused by the action of the weight of the body and keeps it as close to the seat as possible.

In fact, if the belt is kept in close contact with the body, it can gradually absorb the kynetic energy generated during a collision.

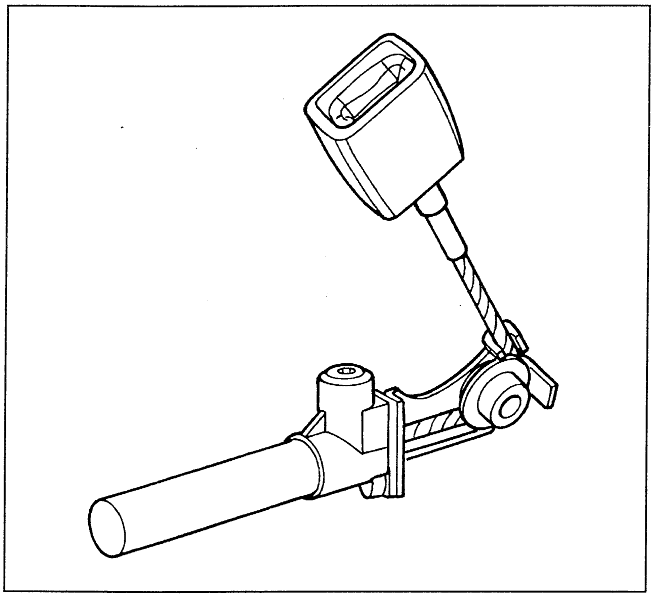

There are many reasons why a seat belt cannot keep a body fully against the seat back without the adoption of this device; the main ones are:

- time delay in the action of the inertial locking mechanism (locking of the reel);
- stretching of the belt fibres;
- "over-extension" of the belt from the reel;
- garments of a certain thickness which create a space between the belt and chest.

From the above, it can be deduced that in reality the belt would effectively begin to restrain its wearer only after a certain amount of movement forward of the body: this is why it is necessary to tension the belt at the time of the crash and thus prevent it from extending.

Operation

When an impact is detected, the control unit suitably commands the firing circuit which supplies the gas generator (1), in a similar manner as for the Air Bag module.

The pressure of the gas that develops is applied on the surface of the piston (2), and creates a force that pushes the piston into the cylinder (3).

A steel cable (4) is shrunk onto the piston (2) and the end of the cable is connected to the belt reel. The movement of piston (2), therefore, shortens the belt by a few centimetres **(appr. 7-8 cm)**, taking up the slack mentioned previously.

NOTE: the pretensioner operating thresholds are lower than those of Air Bags, as mentioned previously, because even a slight impact can cause extension of the belts.

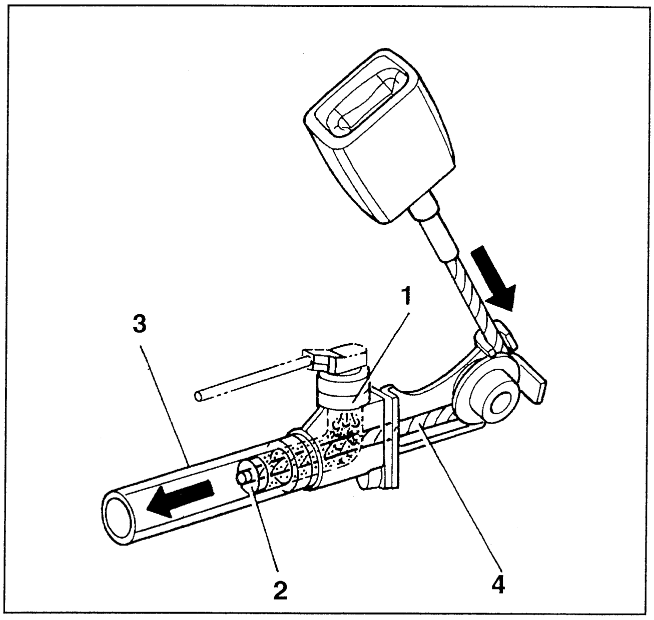

AIR BAG CONTROL UNIT

REMOVAL/REFITTING

☒ **Before doing any work on the system carefully adhere to to the SAFETY INSTRUCTIONS given in "GROUP 55 - ELECTRIC SYSTEM DIAGNOSIS" Section "Air Bag and Pre-tensioners".**
In particular disconnect both battery terminals, isolate them and wait for 10 minutes before doing any work.

- (only for SPIDER). Open the boot lid.
- (only for GTV). Remove the rear seat (see Group 70).

1. Slacken the two fastening screws and remove the control unit cover.

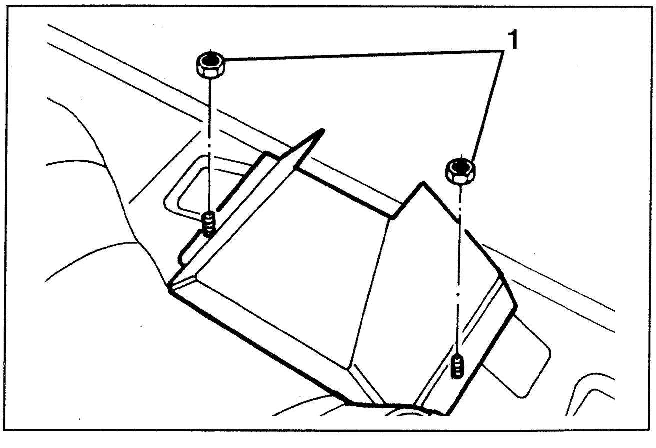

BECKER Control unit (up to chassis No.6016879)

1. Disconnect the control unit connector.
2. Slacken the two fastening screws and remove the control unit.

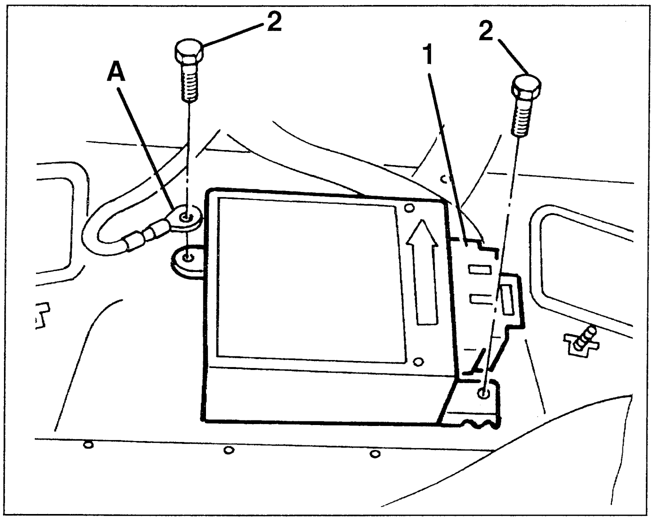

When refitting make sure that the earth ring (**A**) of the Air Bag wiring is fastened correctly (easily distinguished by the yellow sheath) on one of the two clamps of the control unit itself.

DO NOT CONNECT THE BATTERY IF THE ASSEMBLY HAS NOT BEEN COMPLETED CORRECTLY.

NOTE: After the intervention, check system efficiency by means of a TESTER or other diagnostic tool.

TRW Control unit (from chassis No.6016879)

1. Disconnect the control unit connector.

NOTE: To remove the connector, turn the stopper lever in the direction of the arrow.

2. Slacken the two fastening screws.
3. Slacken the nut fastening the earth ring and remove the control unit.

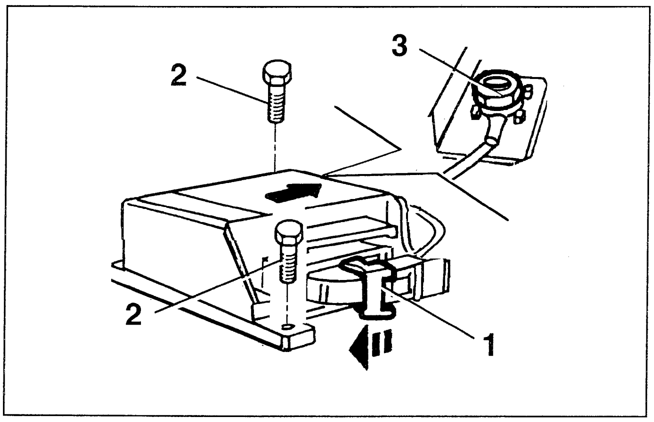

When refitting take care to fasten the earth ring correctly

DRIVER'S SIDE AIR BAG

REMOVAL/REFITTING

- **Before doing any work on the system carefully adhere to to the SAFETY INSTRUCTIONS given in "GROUP 55 - ELECTRIC SYSTEM DIAGNOSIS" Section "Air Bag and Pre-tensioners".**
  In particular disconnect both battery terminals, isolate them and wait for 10 minutes before doing any work.
- **Should system diagnosis using the ALFA TESTER be necessary, disconnect the Air Bag module and replace it with the special dummy resistance (see "Group 55 - ELECTRIC SYSTEM DIAGNOSIS" - Section "Air Bag and Pre-tensioners").**

1. Slacken the two screws fastening the Air Bag module to the steering wheel. (N.B. a special Torx type wrench must be used).
2. Disconnect the electrical connection and remove the module.

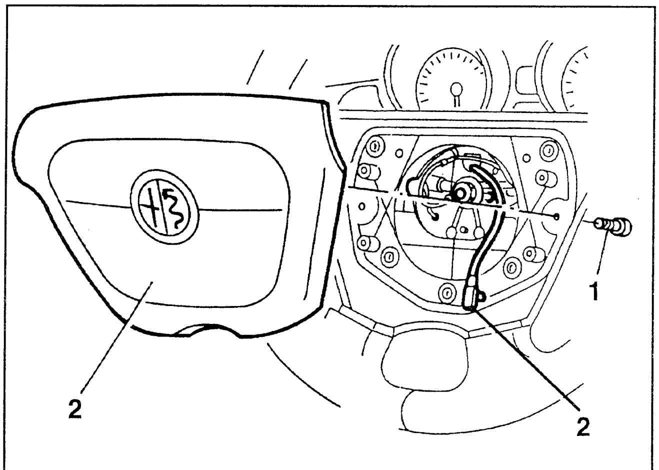

from chassi no.___

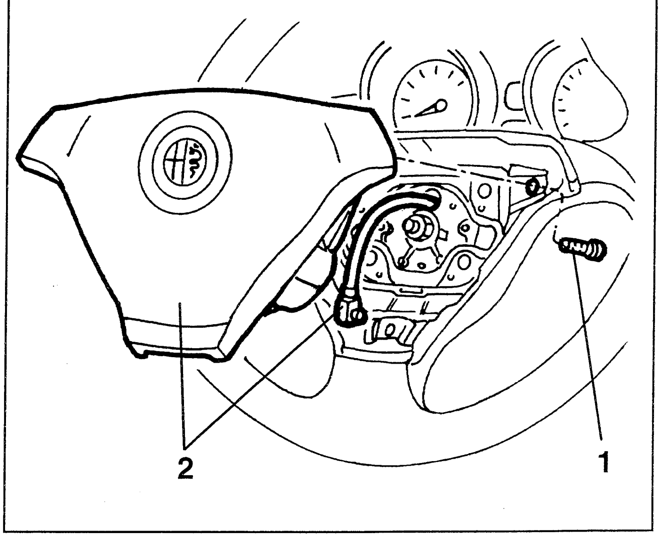

⚠ **DO NOT CONNECT THE BATTERY IF THE ASSEMBLY HAS NOT BEEN COMPLETED CORRECTLY.**

NOTE: *After the intervention, check system efficiency by means of a TESTER or other diagnostic tool.*

CLOCK SPRING DEVICE

REMOVAL/REFITTING

✖ **Also for the clock spring device it is necessary to carefully follow the SAFETY INSTRUCTIONS given in "GROUP 55 - ELECTRIC SYSTEM DIAGNOSIS", Section "Air Bag and Pre-tensioners".**

- Remove the Air Bag module.

1. Remove the steering wheel centre fastening nut.

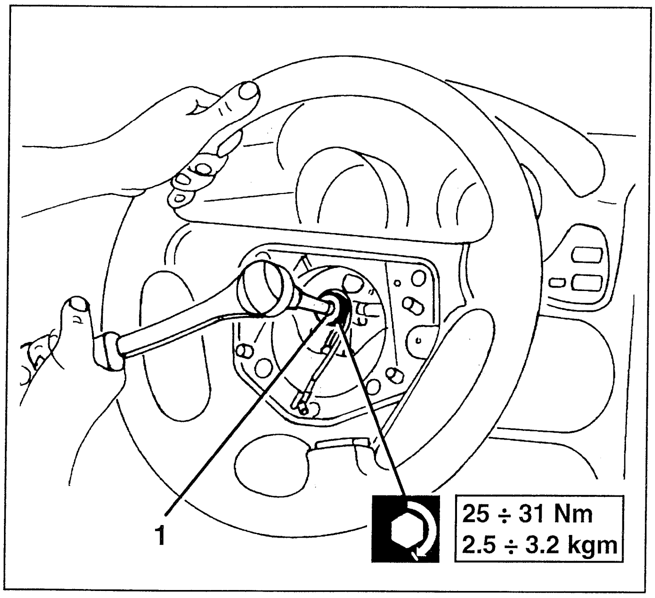

NOTE: before carrying out this operation make sure that the wheels are perfectly straight ("spoked" steering wheel).

1. Using tool 1.821.105.000 remove the steering wheel from the steering column.
2. Disconnect the connection of the clock spring.

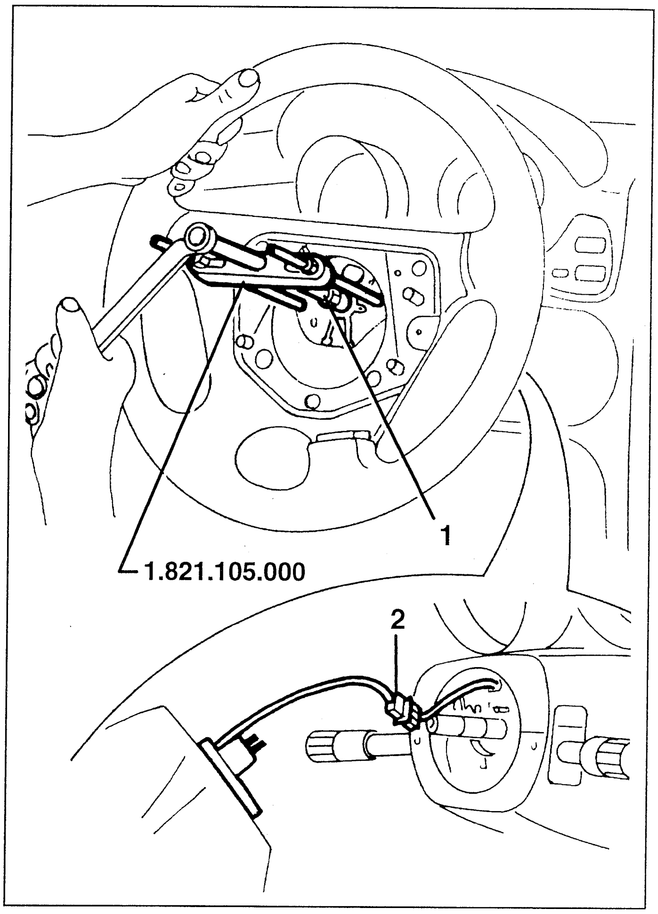

⚠ **WARNING:**
At this stage be very careful not to turn the clock spring in relation to the steering wheel, as the device is locked only when it is separated from the steering wheel (see next step).
It is therefore advisable to stick the clock spring on the steering wheel with adhesive tape.

1. Disconnect the connections of the horns.
2. Slacken the two screws and remove the safety catch.
3. Slacken the three screws and remove the clock spring.

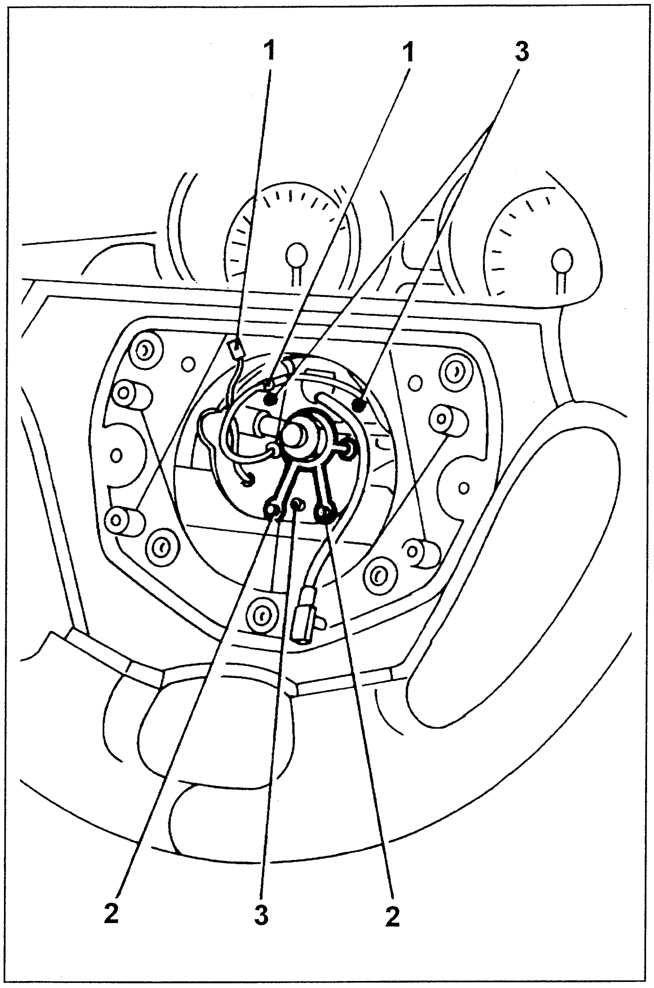

NOTE: After removing the safety catch, the clock spring is locked in its possible rotations as safety pin A comes out.

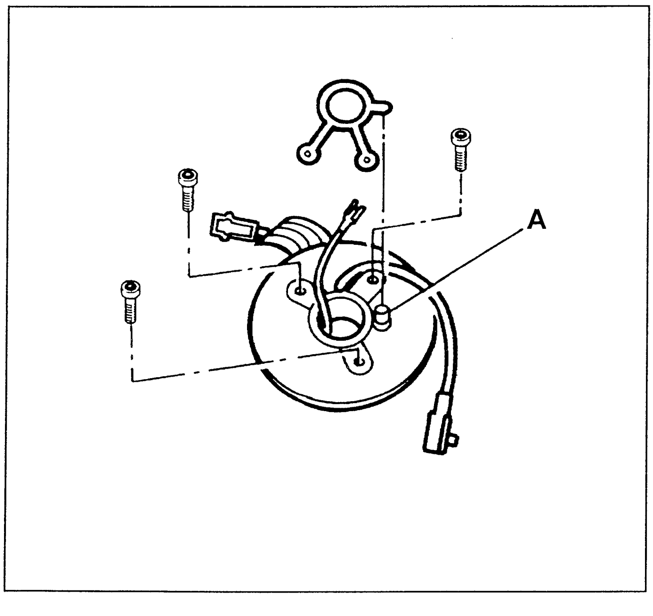

If the clock spring is replaced by a **new** one, the new device is supplied already locked in the correct position by a **clamp**.
Assemble it on the steering wheel as described previously, then remove the clamp and assemble the steering wheel on the steering column **after making sure that the wheels are perfectly straight.**

When the device has been removed, if for any reason whatsoever the upper plate is turned in relation to the lower one - for instance if the pin is pressed inadvertently - it is no longer possible to distinguish the position between the two plates.
In this case, it is necessary to rotate the two plates to the end - pressing the pin - then rewind the cable **3.5 turns:** this position corresponds to half of the winding and makes it possible to assemble the device with the wheels perfectly straight.
If in doubt, change the device.

PASSENGER'S SIDE AIR BAG

REMOVAL/REFITTING (to '97 versions)

- **Before doing any work on the system carefully adhere to to the SAFETY INSTRUCTIONS given in "GROUP 55 - ELECTRIC SYSTEM DIAGNOSIS" Section "Air Bag and Pre-tensioners".**
  In particular disconnect both battery terminals, isolate them and wait for 10 minutes before doing any work.
- **Should system diagnosis using the ALFA TESTER be necessary, disconnect the Air Bag module and replace it with the special dummy resistance (see "Group 55 - ELECTRIC SYSTEM DIAGNOSIS" - Section "Air Bag and Pre-tensioners").**

- Open the glovebox

1. Slacken the two screws fastening the Air Bag device.
2. Remove the Air Bag device, after disconnecting the electrical connection

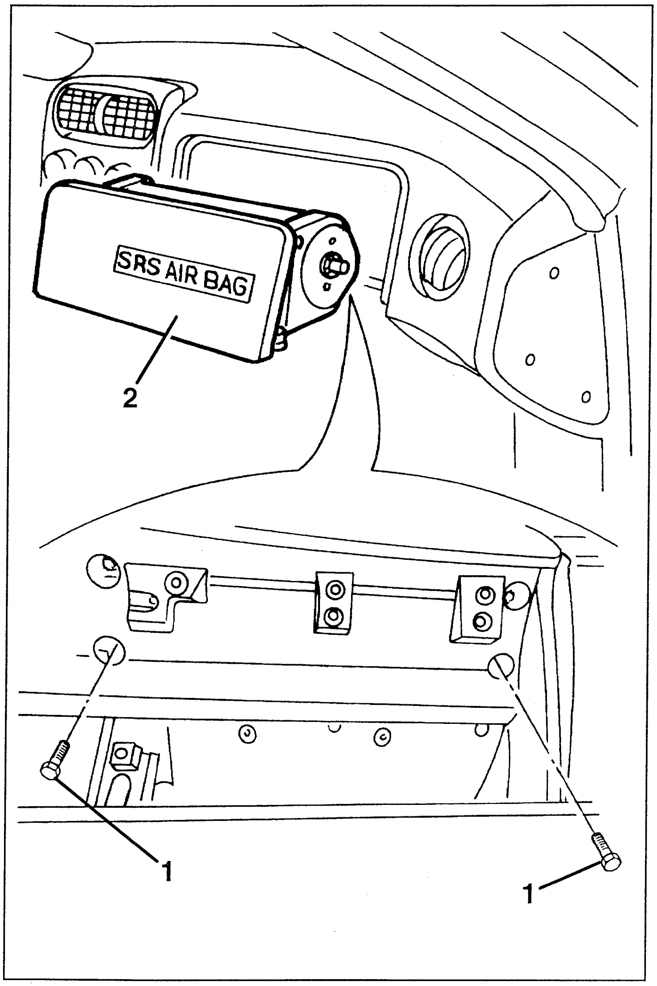

DO NOT CONNECT THE BATTERY IF THE ASSEMBLY HAS NOT BEEN COMPLETED CORRECTLY.

NOTE: *After the intervention, check system efficiency by means of a TESTER or other diagnostic tool.*

REMOVAL/REFITTING ('98 versions)

- **Before operating on this system, scrupulously attain to the SAFETY RULES illustrated in "Assembly 55 - ELECTRICAL SYSTEM DIAGNOSTICS ", section "Airbag and Pretensioners ". In particular, disconnect both battery terminals, insulate them accurately and wait for 10 minutes before starting the operations.**
- **If a system test with ALFA ROMEO TESTER is required, disconnect the Airbag unit and replace it a specific simulation resistance (see "Assembly 55 - ELECTRICAL SYSTEM DIAGNOSTICS").**

1. Open the glove compartment and disconnect the retainer laces.
2. Loosen the airbag fastening screws.
3. Extract the airbag slightly.

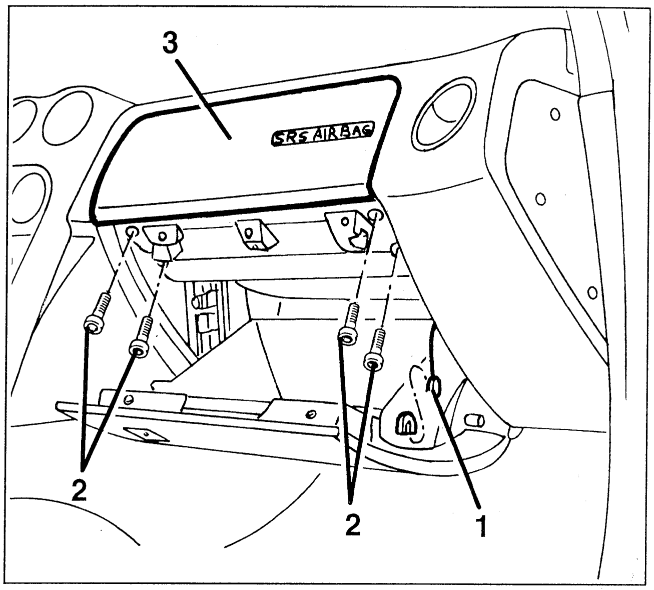

1. Disconnect the airbag electrical connection.

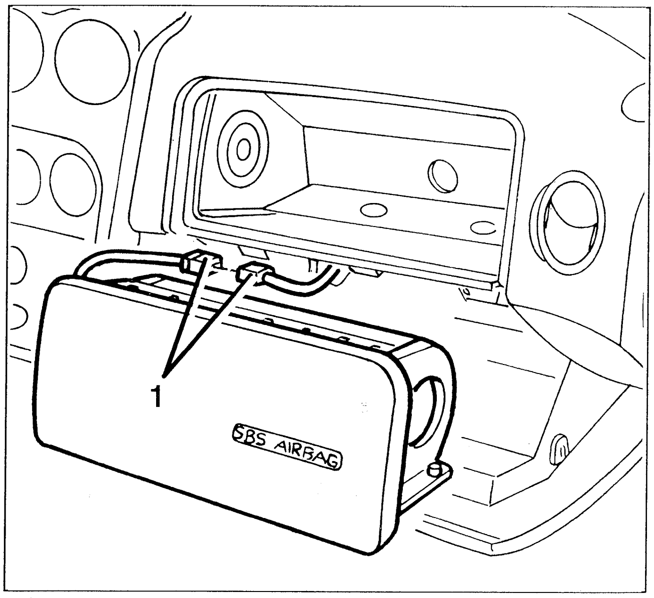

Refit the airbag by reversing the removal sequence.

DO NOT CONNECT THE BATTERY UNTIL ASSEMBLY IS COMPLETED CORRECTLY.

NOTE: *After the intervention, check operation with the TESTER or other diagnostic tool.*

PASSENGER SIDE AIRBAG DISABLE SWITCH

REMOVAL/REFITTING

Before removing and refitting the ECU, perform the following preliminary operations:
- Turn the ignition key to "STOP" and remove it;
- Disconnect the battery.

1. Remove the switch.
2. Disconnect the electrical connection and take the switch.

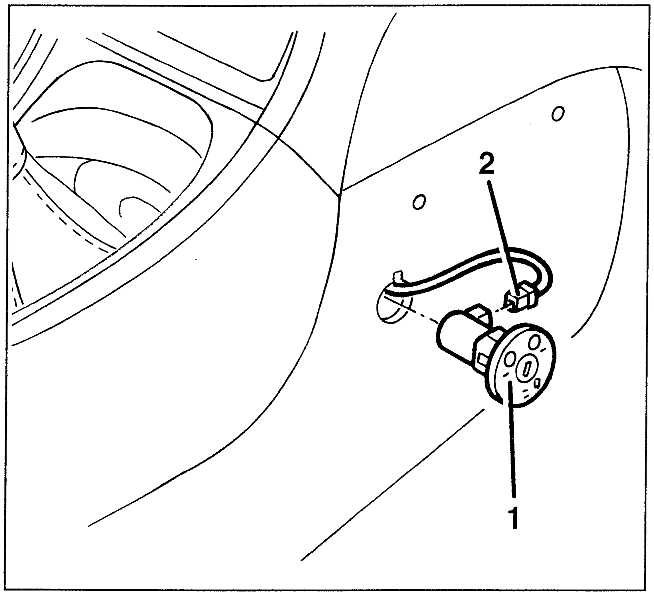

Refit the switch by reversing the removal sequence.

FRONT SEAT BELT PRE-TENSIONERS

REMOVAL/REFITTING

WARNING:
Before doing any work on the system carefully adhere to the SAFETY INSTRUCTIONS given in "Group 55 - ELECTRIC SYSTEM DIAGNOSIS", Section "Air Bag and Pre-tensioners".
In particular disconnect both battery terminals, isolate them and wait for 10 minutes before doing any work.

– Remove the seat (see specific paragraph).
1. Disconnect the connection of the pre-tensioner.
2. Tilt the seat back forwards.
3. Slacken the screw fastening the seat belt whip.
4. Retrieve the whip complete with pre-tensioner, passing the belt buckle between seat back and cushion.

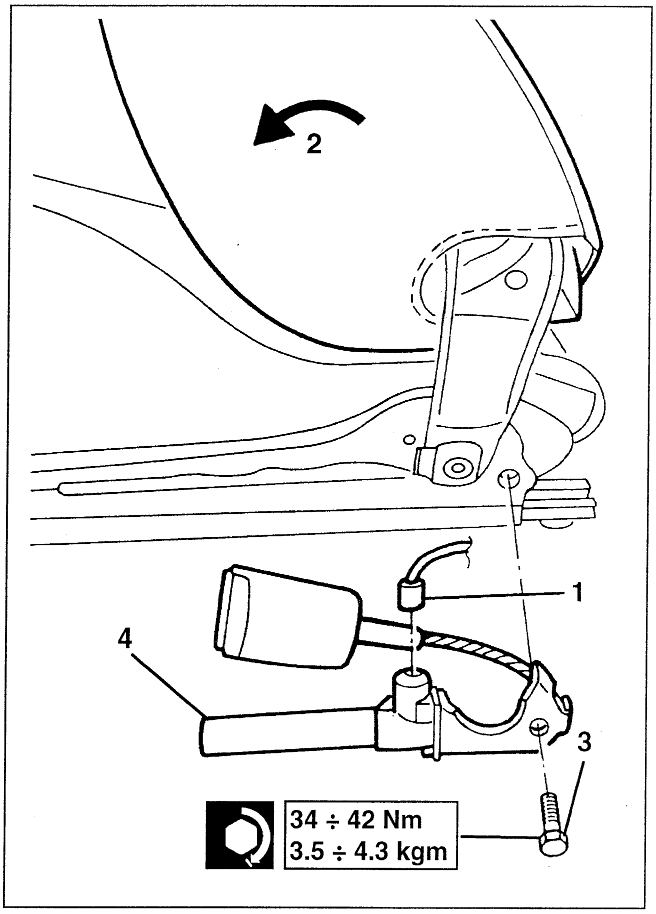

WARNING:
During both removal and refitting, avoid the use of pneumatic screwdrivers and always avoid knocking the pre- tensioner.

DO NOT CONNECT THE BATTERY IF THE ASSEMBLY HAS NOT BEEN COMPLETED CORRECTLY.

NOTE: After the intervention, check system efficiency by means of a TESTER or other diagnostic tool.

SCRAPPING AN AIRBAG MODULE OR PRE-TENSIONER

NEVER SCRAP A CAR WITH AN UNEXPLODED AIRBAG MODULE OR PRETENSIONER.

DEPLOYED COMPONENTS

Deployed components must never be repaired. They must always be replaced. Modules removed following all the safety procedures, can be split into steel, aluminium and whole plastic components and may be disposed of locally as special waste. As such, they should be entered in the waste register and sent to carriers and waste disposal units authorised for special wastes.

UNDEPLOYED COMPONENTS

Follow the instructions of the "Removing/Refitting paragraphs for removing the Air Bag and/or pre-tensioners from their housing and send this material to GECMA, Chivasso without carrying out any repair, neutralizing or triggering operations which involve specific risks and may only be carried out by skilled personnel authorized by the authorities concerned.

Therefore, for Italy, this material should be sent to GECMA of Chivasso, with the following wording on the delivery note:

"AIR-BAG/PRE-TENSIONER DEVICE CONTAINING PYROTECHNICAL CHARGE TO BE DE-ACTIVATED".

The devices must be sent to GECMA in the same packages in which the spares were received and, if these are not available, it is possible to ask the Volvera warehouse for the package only.

Obviously, in the case of replacement of Air Bag/Pre- tensioner devices, the original packing should be kept intact for returning the unexploded device to GECMA.

N.B.: FOREIGN MARKETS

The above instructions are only for Italy: For the other Markets the local laws in force are to be complied with.

ELECTRONIC CONTROL UNITS

WARNING:
The following pages describe the procedures necessary for removing and refitting the electronic control units fitted on the vehicle with the exception of some devices inserted directly in the fusebox.

For the location of the various devices (control units, relays, etc.) and for any other functional information see "Group 55 - ELECTRIC SYSTEM DIAGNOSIS".

INJECTION-IGNITION CONTROL UNIT

REMOVAL/REFITTING

- Disconnect the battery
- Remove the glove box (see specific paragraph).

1. Working under the dashboard on the right-hand side panel of the passenger compartment, move the trim aside.
2. Slacken the two nuts
3. Detach the control unit from the side panel
4. Disconnect the combs and retrieve the control unit.

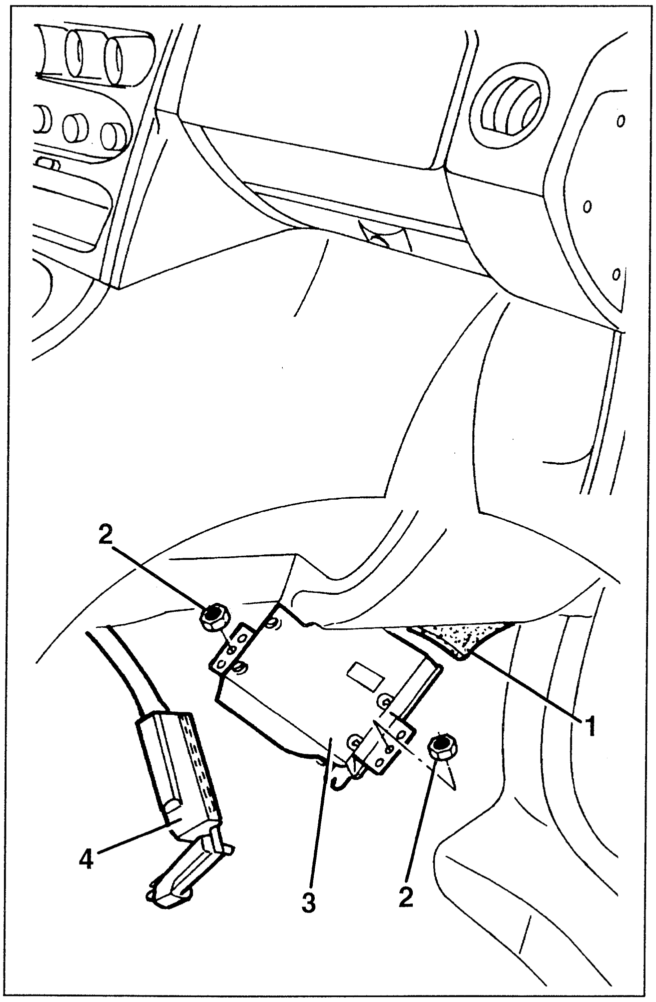

ABS CONTROL UNIT

The ABS control unit is integrated in the hydraulic unit of the ABS system.

For removal and refitting procedures see Group 33 - Brakes.

ALARM SYSTEM CONTROL UNIT

The alarm system control unit is integrated with the siren and cannot be removed separately. For removal and refitting procedures see specific paragraph "Alarm System".

AIR BAG AND PRE-TENSIONER CONTROL UNIT

For removal and refitting procedures see specific paragraph "Air Bag and pre-tensioners".

POWER WINDOW CONTROL UNIT (*)

REMOVAL/REFITTING

- Disconnect the battery.

1. Using tool 1.823.025.000 rotate the three bayonet pins fastening the fusebox cover.
2. Remove the fusebox cover.

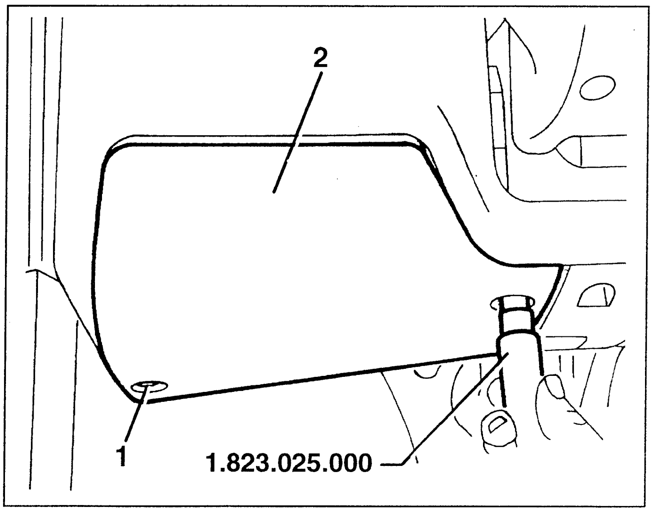

(*) From the '97 version the "integrated services" control unit has been replaced. The REMOVING/REFITTING procedure remains unchanged.

1. Disconnect the electrical connections.
2. Slacken the two screws and remove the power window control unit.

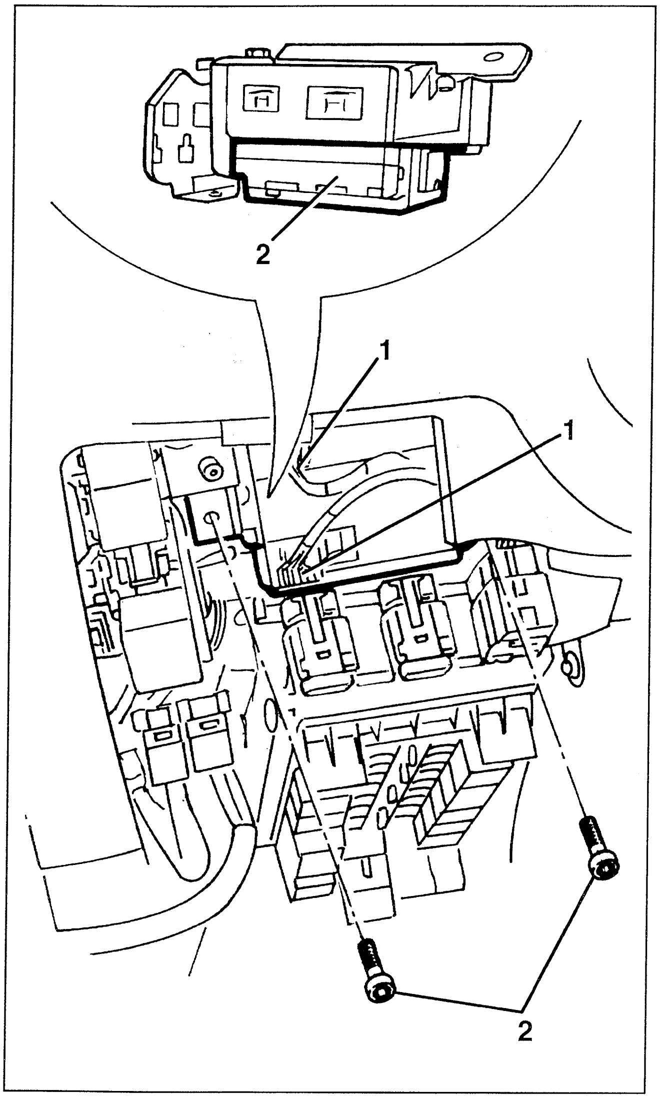

ALFA ROMEO CODE CONTROL UNIT

REMOVAL/REFITTING

- Remove the power window control unit (see specific paragraph).

1. Slacken the two screws and lower the Alfa Romeo Code control unit below.
2. Disconnect the electrical connections and retrieve the control unit.

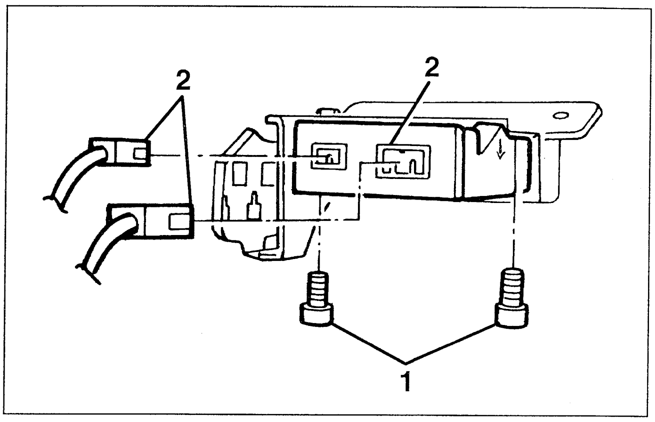

ALFA ROMEO CODE AERIAL ('98 versions)

REMOVAL/REFITTING

- Remove the steering wheel and the half casings (See ASSEMBLY 41).
- Remove the main instrument panel (See specific paragraph).
- Remove the instrument panel left-hand side switch assembly (See specific paragraph).

1. Release the aerial from its retainers.
2. Disconnect the aerial wire from the retainer clips.
3. Disconnect the ECU electrical connection and take the complete aerial.

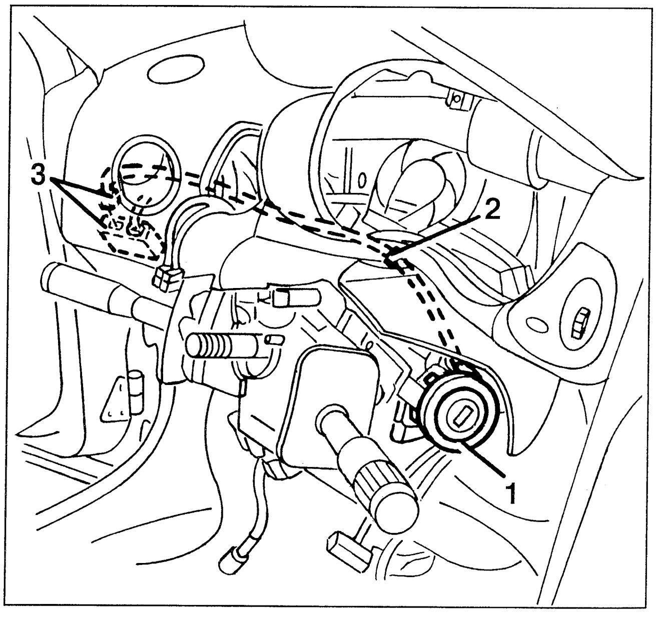

Refit the code aerial by reversing the removal sequence.

CLIMATE CONTROL UNIT (From chassis no. ___ present only on the 3.0 V6 version)

REMOVAL/REFITTING

– Disconnect the battery and open the bonnet.

– Remove the right-hand engine compartment cover see Group 70).

1. Slacken the centre screw and retrieve the cover.
2. Slacken the four nuts.
3. Disconnect the electrical connections and the earth eyelet.
4. Retrieve the control unit.

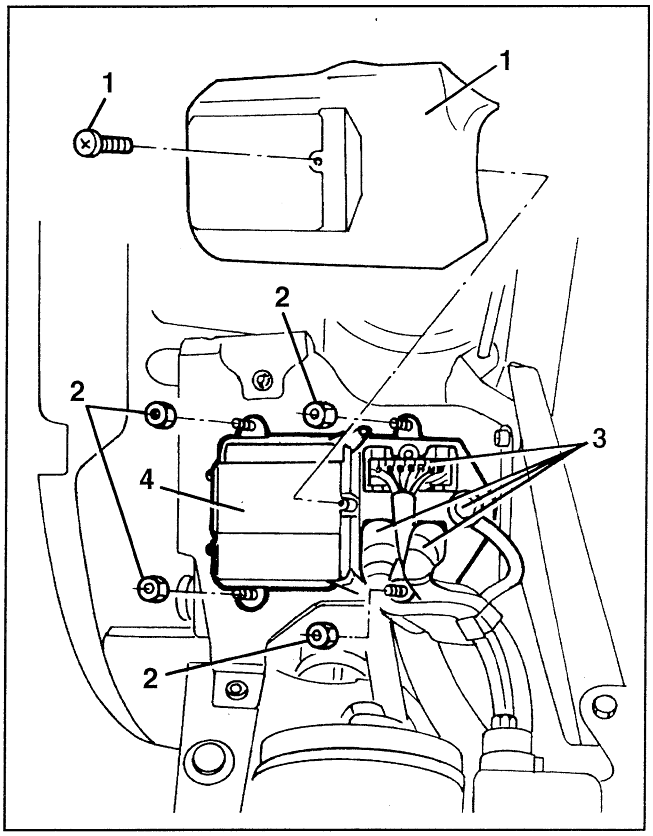

ELECTRIC SYSTEM DIAGNOSIS

55

INDEX

An **ALPHABETICAL INDEX,** for rapid identification of a specific subject is given at the back.

➡

ALPHABETICAL INDEX

INTRODUCTION

INDEX

This Group "55 - ELECTRIC SYSTEM DIAGNOSIS" contains all the necessary information regarding the **electric and electronic systems and circuits on these models.**
All the instruments which are useful in finding faults and failures that might occur in the above-mentioned systems are given particular attention.
Each circuit is dealt with separately in a specific section in which the following can be found:

- operation and description of the circuit;
- wiring diagram;
- locating the main components;
- table for locating the more frequent faults with relative test procedures for the components.

STRUCTURE OF THE MANUAL

This manual is subdivided into sections, each dealing with and analyzing a single circuit. All the sections are identical in lay-out and comprise 5 parts:

A wiring diagram:

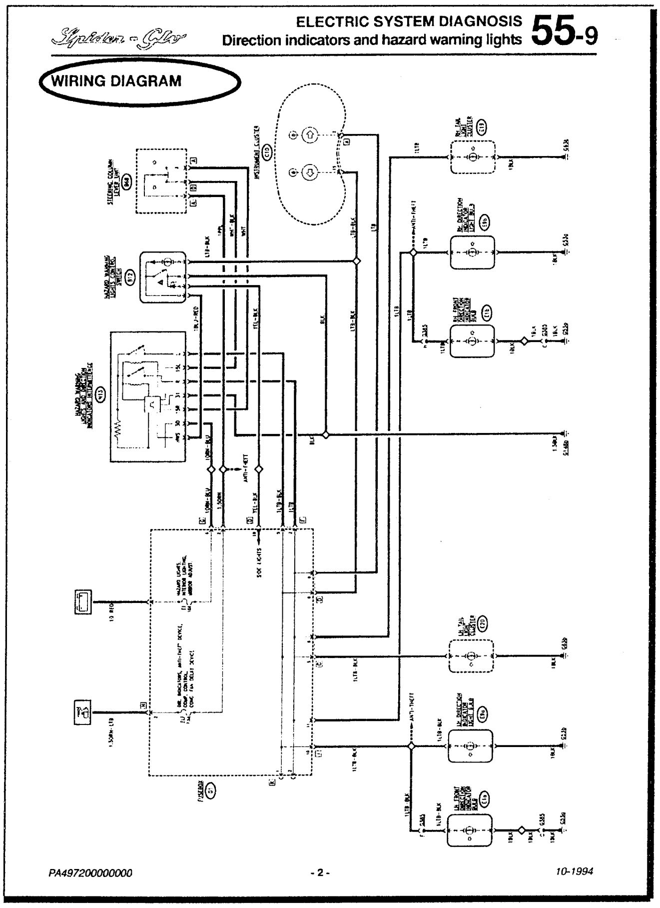

ELECTRIC SYSTEM DIAGNOSIS
Direction indicators and hazard warning lights 55-9

WIRING DIAGRAM

PA497200000000 -2- 10-1994

B general description (description of the circuit and its operation) and functional description (analytical illustration of the wiring system):

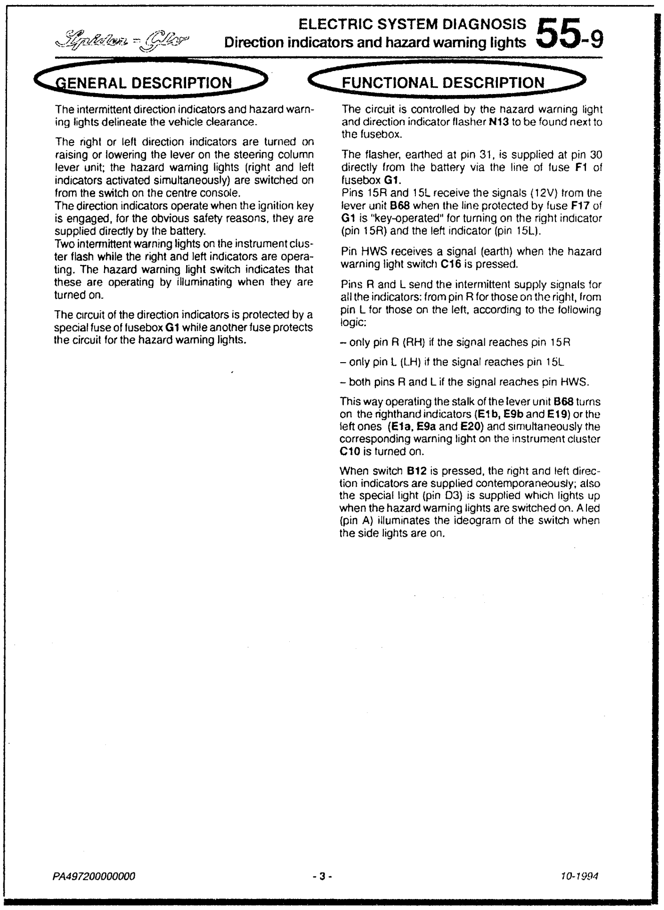

ELECTRIC SYSTEM DIAGNOSIS
Direction indicators and hazard warning lights 55-9

GENERAL DESCRIPTION

The intermittent direction indicators and hazard warning lights delineate the vehicle clearance.

The right or left direction indicators are turned on raising or lowering the lever on the steering column lever unit; the hazard warning lights (right and left indicators activated simultaneously) are switched on from the switch on the centre console.
The direction indicators operate when the ignition key is engaged, for the obvious safety reasons, they are supplied directly by the battery.
Two intermittent warning lights on the instrument cluster flash while the right and left indicators are operating. The hazard warning light switch indicates that these are operating by illuminating when they are turned on.

The circuit of the direction indicators is protected by a special fuse of fusebox **G1** while another fuse protects the circuit for the hazard warning lights.

FUNCTIONAL DESCRIPTION

The circuit is controlled by the hazard warning light and direction indicator flasher **N13** to be found next to the fusebox.

The flasher, earthed at pin 31, is supplied at pin 30 directly from the battery via the line of fuse **F1** of fusebox **G1**.
Pins 15R and 15L receive the signals (12V) from the lever unit **B68** when the line protected by fuse **F17** of **G1** is "key-operated" for turning on the right indicator (pin 15R) and the left indicator (pin 15L).

Pin HWS receives a signal (earth) when the hazard warning light switch **C16** is pressed.

Pins R and L send the intermittent supply signals for all the indicators: from pin R for those on the right, from pin L for those on the left, according to the following logic:

- only pin R (RH) if the signal reaches pin 15R
- only pin L (LH) if the signal reaches pin 15L
- both pins R and L if the signal reaches pin HWS.

This way operating the stalk of the lever unit **B68** turns on the righthand indicators (**E1b, E9b** and **E19**) or the left ones (**E1a, E9a** and **E20**) and simultaneously the corresponding warning light on the instrument cluster **C10** is turned on.

When switch **B12** is pressed, the right and left direction indicators are supplied contemporaneously; also the special light (pin D3) is supplied which lights up when the hazard warning lights are switched on. A led (pin A) illuminates the ideogram of the switch when the side lights are on.

PA497200000000 -3- 10-1994

Sometimes the general description is extensive and detailed, as important service information is given: in this case it precedes the wiring diagram to introduce the subject.

C location of the components on the car:

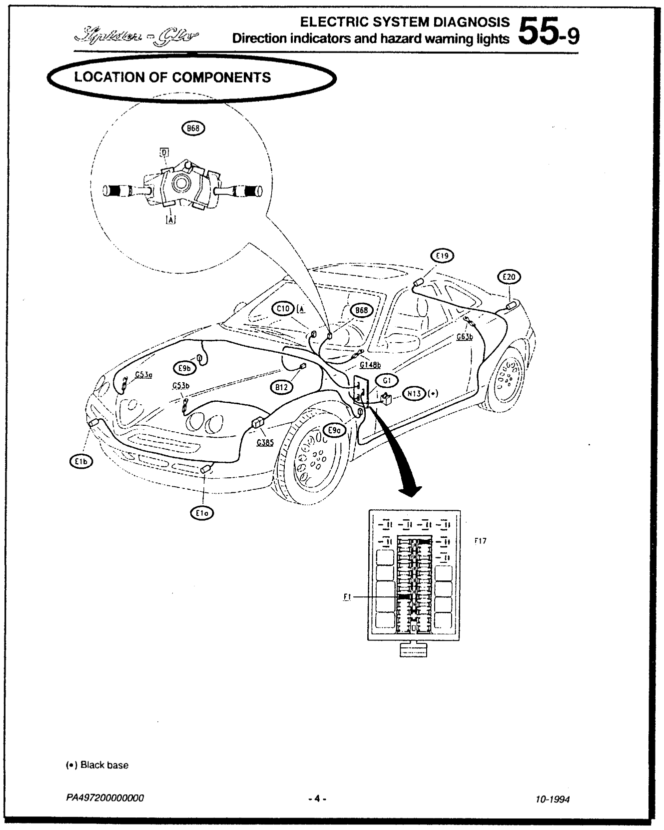

ELECTRIC SYSTEM DIAGNOSIS 55-9
Direction indicators and hazard warning lights

LOCATION OF COMPONENTS

(•) Black base

PA497200000000 - 4 - 10-1994

D trouble-shooting including "fault-finding tables", "checking components" and tests:

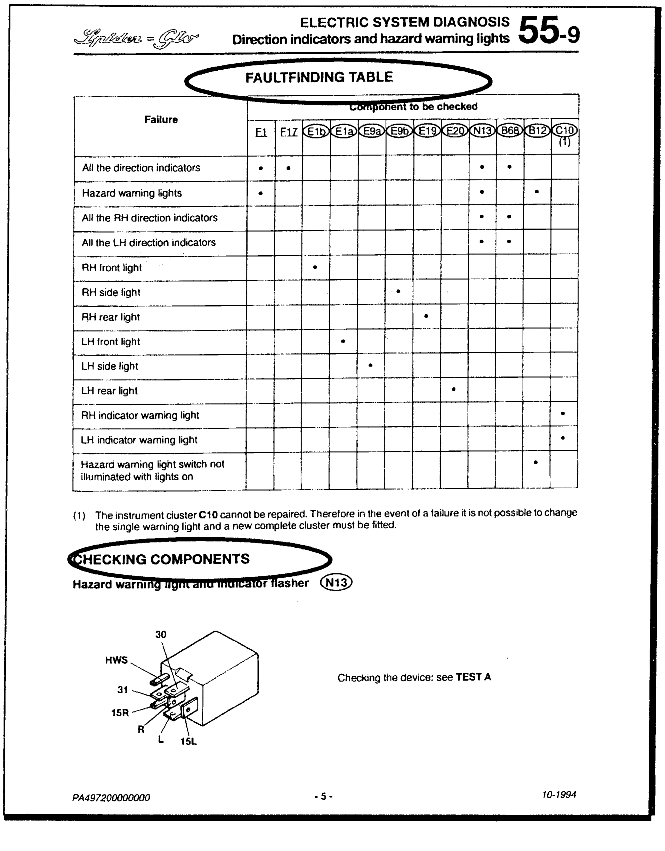

ELECTRIC SYSTEM DIAGNOSIS 55-9
Direction indicators and hazard warning lights

FAULTFINDING TABLE

Failure	Component to be checked											
	E1	E17	E1b	E1a	E9a	E9b	E19	E20	N13	B68	B12	C10 (1)
All the direction indicators	•	•							•	•		
Hazard warning lights	•								•		•	
All the RH direction indicators									•	•		
All the LH direction indicators									•	•		
RH front light			•									
RH side light						•						
RH rear light							•					
LH front light				•								
LH side light					•							
LH rear light								•				
RH indicator warning light												•
LH indicator warning light												•
Hazard warning light switch not illuminated with lights on											•	

(1) The instrument cluster **C10** cannot be repaired. Therefore in the event of a failure it is not possible to change the single warning light and a new complete cluster must be fitted.

CHECKING COMPONENTS

Hazard warning light and indicator flasher N13

Checking the device: see **TEST A**

PA497200000000 - 5 - 10-1994

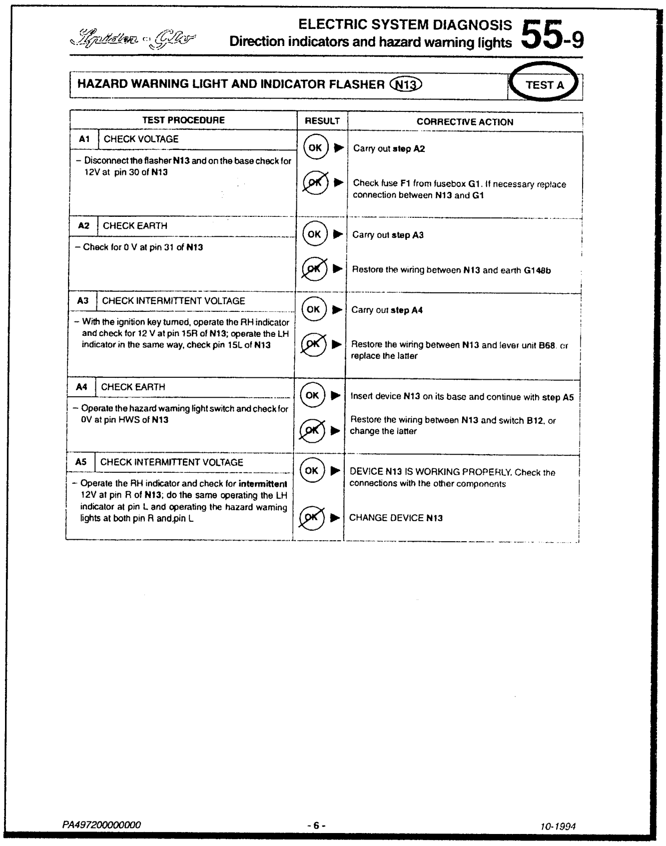

ELECTRIC SYSTEM DIAGNOSIS 55-9
Direction indicators and hazard warning lights

HAZARD WARNING LIGHT AND INDICATOR FLASHER N13 — TEST A

TEST PROCEDURE	RESULT	CORRECTIVE ACTION
A1 CHECK VOLTAGE – Disconnect the flasher **N13** and on the base check for 12V at pin 30 of **N13**	OK ▶	Carry out **step A2**
	~~OK~~ ▶	Check fuse **F1** from fusebox **G1**. If necessary replace connection between **N13** and **G1**
A2 CHECK EARTH – Check for 0 V at pin 31 of **N13**	OK ▶	Carry out **step A3**
	~~OK~~ ▶	Restore the wiring between **N13** and earth **G148b**
A3 CHECK INTERMITTENT VOLTAGE – With the ignition key turned, operate the RH indicator and check for 12 V at pin 15R of **N13**; operate the LH indicator in the same way, check pin 15L of **N13**	OK ▶	Carry out **step A4**
	~~OK~~ ▶	Restore the wiring between **N13** and lever unit **B68**, or replace the latter
A4 CHECK EARTH – Operate the hazard warning light switch and check for 0V at pin HWS of **N13**	OK ▶	Insert device **N13** on its base and continue with **step A5**
	~~OK~~ ▶	Restore the wiring between **N13** and switch **B12**, or change the latter
A5 CHECK INTERMITTENT VOLTAGE – Operate the RH indicator and check for **intermittent** 12V at pin R of **N13**; do the same operating the LH indicator at pin L and operating the hazard warning lights at both pin R and pin L	OK ▶	DEVICE N13 IS WORKING PROPERLY. Check the connections with the other components
	~~OK~~ ▶	CHANGE DEVICE **N13**

PA497200000000 - 6 - 10-1994

At the end of each section the following are given:

- **key to components;**
- **tables of components and connectors**, illustrated one by one completely (in alphabetical order);

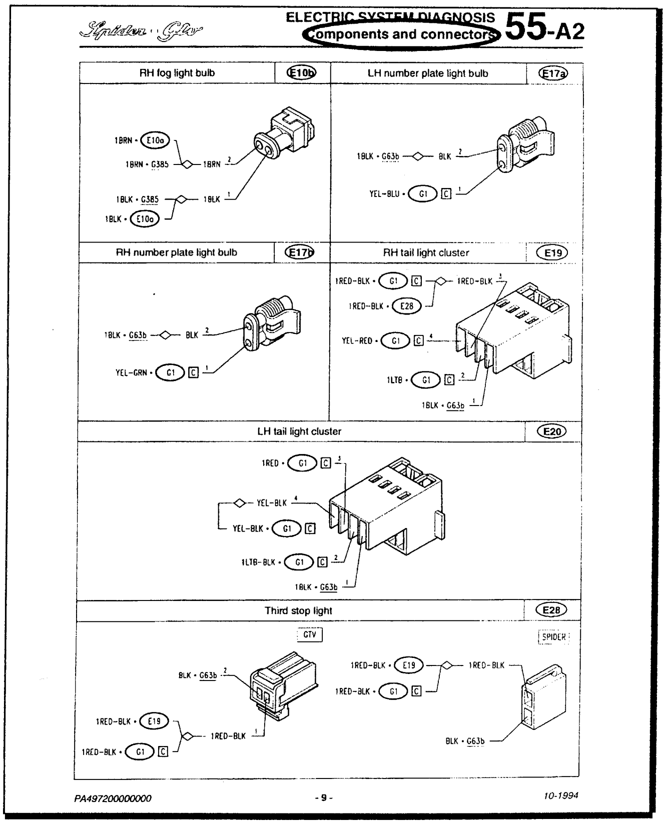

ELECTRIC SYSTEM DIAGNOSIS 55-A2
Components and connectors

RH fog light bulb E10b

LH number plate light bulb E17a

RH number plate light bulb E17b

RH tail light cluster E19

LH tail light cluster E20

Third stop light E28

PA497200000000 - 9 - 10-1994

WIRING DIAGRAMS

The wiring diagrams are made following the operation of the circuit in order to make it easier to understand them, therefore quicker to identify a fault.
The lay-out follows the "flow" of the current and signals, starting from the power source (always placed higher up) passing the components and reaching the earths located lower down.
The power supply is represented schematically with different symbols which vary depending on the position of the key in the ignition:

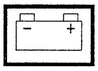

– line under constant supply (directly connected to the battery)

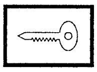

– line supplied when the ignition key is turned to "RUN" (first position of the key)

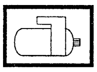

– line supplied when the key is turned to "STARTING" (second position of the key which is disengaged when the key is released)

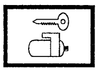

– line supplied when the key is either in the "RUN" or "STARTING" position.

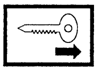

– line supplied when the key is in the "PARKING" position (key turned in the opposite direction and withdrawn after pressing the special button.

A special section ("**Power Supply**") deals in detail with the power supply to all the lines and operation of the ignition switch.

The fusebox is not represented wholly in the single diagrams and only the components useful to the diagram under examination are given; a complete description of the whole fusebox is given in the specific section ("**Fusebox**").

All the components and connectors are represented in the diagrams by an alphameric code (eg. A10). The initial letter of this code represents the type of component:

A	STARTING - RECHARGING
B	MANUAL ELECTRICAL CONTROLS
C	INSTRUMENTATION
D	WARNING LIGHTS
E	EXTERIOR LIGHTS
F	INTERIOR LIGHTS
G	FUSEBOXES - CONNECTORS - EARTHS
H	SWITCHES
I	RELAYS
L	SENDERS
M	ELECTROMAGNETS - SOLENOID VALVES
N	ELECTRONIC DEVICES - INTERMITTENCES - TIMERS
O	SERVICES
P	ELECTRIC MOTORS
Q	HEATING/VENTILATION - AIR CONDITIONING
R	SAFETY DEVICES
S	ELECTRONIC INJECTION
T	DIAGNOSIS

A complete key is given at the end of **all the wiring diagrams.**

The names of the components are given in the charts and the codes are circled, but, for reasons of space, the codes for simple connectors (connections) are only underlined.

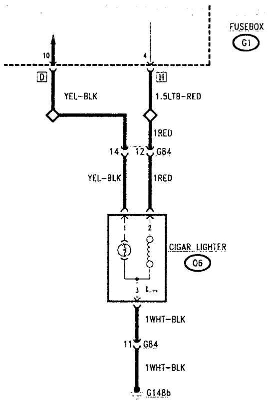

The components are always shown in their rest position: eg. the N.C. (normally closed) contacts are shown closed, the relays deactivated, etc..

The outline of a component is hatched to indicate that in the chart in question only part of it is shown; for example, the fusebox, due to the reasons mentioned above, will always be shown hatched.
Wherever necessary, arrows indicate references to other relevant diagrams.

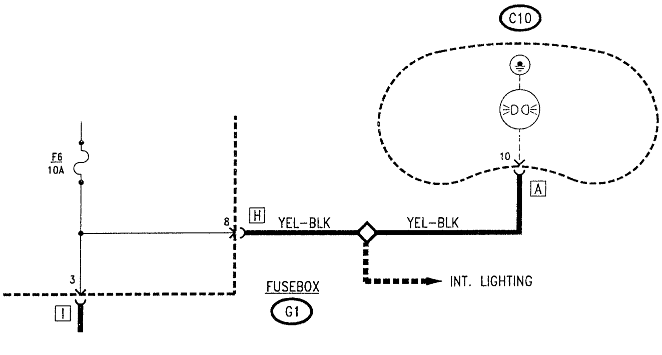

The earth lines only show the earth point (located in the lower part of the diagram) to which they are connected and not the other lines connected to it; A special section "Location of Earths" gives all the lines converging on each earthing point.

NOTE: these crossed references between the lines and on the earths make it possible to easily identify the faults in the event of failures in more than one circuit at the same time: for example, a faulty earth point will cause a failure to all the circuits which converge on it.

N.B.: the diagrams represent the vehicle in its most complete version (all the optional items installed) and they refer to all versions except when otherwise specified, for example SPIDER, GTV, different engines, etc.. Any variations are differentiated by a hatched line and the identification of the different versions.

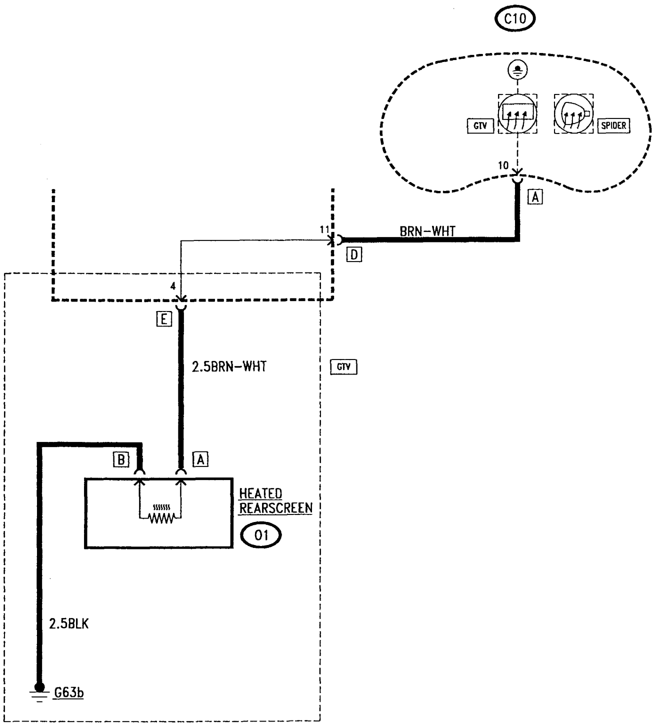

NOTE:
The versions with a smaller number of accessories might not have all the solderings to be found in the wirings of the complete versions.

CABLE IDENTIFICATION

Each cable shown in the diagrams is characterised by a code formed by numbers and letters: the numbers indicate the cable diameter in sq.mm (0.5 where not stated), while the letters indicate the colour according to the table given below:

CABLE IDENTIFICATION TABLE

COLOUR	IDENTIFICATION LETTER
Black	BLK
White	WHT
Light blue	LTB
Brown	BRN
Yellow	YEL
Red	RED
Green	GRN
Grey	GRY
Pink	PNK
Orange	ORN
Purple	PPL
Blue	BLU

NOTE: for combinations the colours are simply coupled:

Light blue-white	LTB-WHT
Green-black	GRN-BLK
Blue-Red	BLU-RED

ELECTRICAL COMPONENTS

The electrical components are represented in the diagrams by the most-frequently used and best-known international symbols.

The following table lists these symbols as they are shown in the diagrams:

COMPONENT SYMBOLOGY			
SYMBOL	**NAME**	**SYMBOL**	**NAME**
	Connector	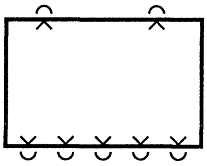	Electronic control unit
	Earth point	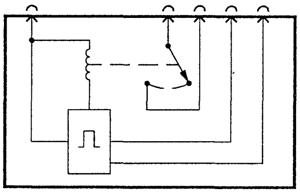	Electronic device (eg. intermittence-timer)
	Ultrasound solder	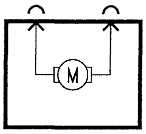	Electric motor
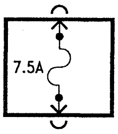	Fuse	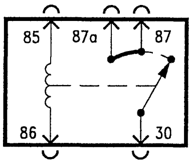	Relay
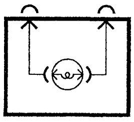	Bulb	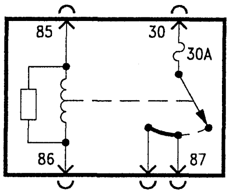	Relay with fuse
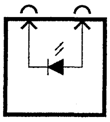	Led	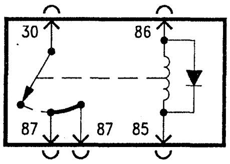	Relay with diode
	Battery	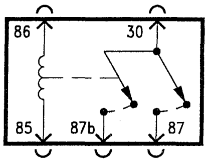	Relay with double contact
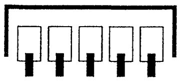	Branch point		
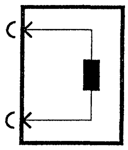	Solenoid		

COMPONENT SYMBOLOGY	
SYMBOL	**NAME**
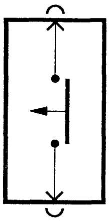 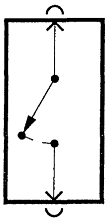 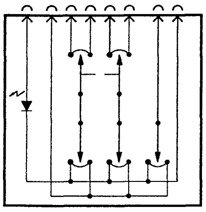	Switch/ contact
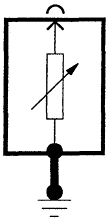 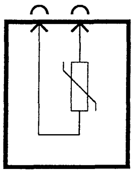 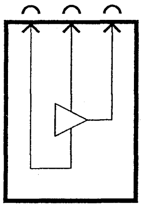	Sensor/ sender
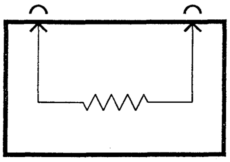	Resistance
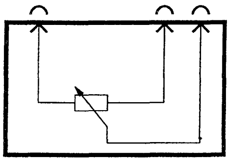	Rheostat

DESCRIPTION

The first part (**general description**) describes the purpose of the circuit or system under examination and shows how it works: this is a condition which is necessary for each subsequent operation check and for any trouble-shooting found to be necessary.
The second part (**functional description**) shows the wiring diagram analytically, following the "flow" of the supply signals towards earth from the upper section downwards.
The components are identified by the same alphameric codes used in the diagrams (and in the key at the end of this publication).
A brief description is also given of the components which need to be outlined from an electrical point of view (eg. relays, contacts, fuses, connectors,...) in order to be able to check their functioning during the subsequent fault diagnosis tests.

LOCATION OF COMPONENTS

Schematic diagrams representing the silhouette of the car makes it easy to find the various components of the circuit under examination and to locate, where necessary, the routing of the cables fastened to the body of the vehicle itself.

FAULT FINDING

The descriptive section is followed by the **"FAULT-FINDING TABLE"** which lists the possible (and most frequent) faults which can affect the circuit in question: for each of these, the possible components involved are listed: **the components are listed in the order of likelihood of a fault (for example first the fuses) or the ease with which access may be gained to them.** In the example below, the fault affecting function X involves components 1 and 5, that of Y involves components 2, 3 and 4.

Failure	**Component**				
	1	2	3	4	5
X	•				•
Y		•	•	•	

N.B. All the fault finding procedures given in this publication begin from the hypothesis that there is ONLY ONE FAULT in the system. In the very unlikely event of simultaneous faults it will be necessary to combine more than one procedure.
If more than one circuit or system are out of order at the same time, there are at least two situations that can be easily recognized: the failure of a fuse protecting different lines (for this refer to the section "Fuse-boxes") or a fault in an earth point on which different lines converge (for this, refer to the section "Location of Earths". After the faultfinding table the list of **COMPONENT CHECKS** is given: this lists the characteristics and technical data needed to quickly check the operation of components that are not considered elementary (eg. bulbs, switches, fuses, etc.).

If the checking operation is complex, it is described in detail in a **FAULT FINDING TEST** to be found at the end of the section.

N.B.
If the fault persists when the single components and their connections have been checked, it is necessary to check the electrical continuity and for any short circuits or cut offs following the different lines concerned, referring to the wiring diagram at the beginning of each section.

Each of the above-mentioned tests is identified by a letter.

The tests are described in three column tables with the following arrangement:

1st column: "TEST PROCEDURE" :
this column indicates the "steps" to be carried out to check the circuit and locate the fault in question.

2nd column: "RESULT":
this column indicates the two possible outcomes of the tests carried out: "OK" or "NOT OK" which indicate the remedy to be followed.

3rd column : "CORRECTIVE ACTION":
depending on the outcome of the tests, this column gives the possible remedies which may be used to restore the correct operation of the vehicle: for example, changing a component etc.., or reference to the next step to be carried out towards locating the fault.
All the operations and checks listed can be carried out with a simple multimeter, as shown below.

FAULT-FINDING BY SELF-DIAGNOSIS

Some of the electronic systems installed on the car possess a **self-diagnosis function**.
Fault finding on these systems can be carried out quickly and effectively using the **ALFA ROMEO TESTER** after inserting the suitable cartridge for the system concerned.

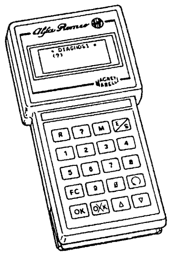

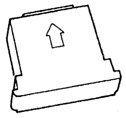

In this case, this manual only describes the preliminary checks to be carried out before connecting the Tester; special publications describe the use of the Tester and its different cartridges.

Where possible the data are given for checking the single components.
Some of these systems also give another possibility of diagnosis through a **FLASHING CODE** which indicates the failures recorded in the system control unit: in these cases all the tests to be carried out according to the failures recorded are described.

COMPONENTS AND CONNECTORS

A table lists all the components and connectors used in the wiring diagram of the section. Both parts ("male" and "female") are shown for the intermediate connectors.
Alongside the schematic diagram of the component the cables indicated in the corresponding wiring diagram are shown, indicating the cross-section, colour and the component to which this cable is connected.

N.B. In certain cases unconnected or spare cables will be shown.

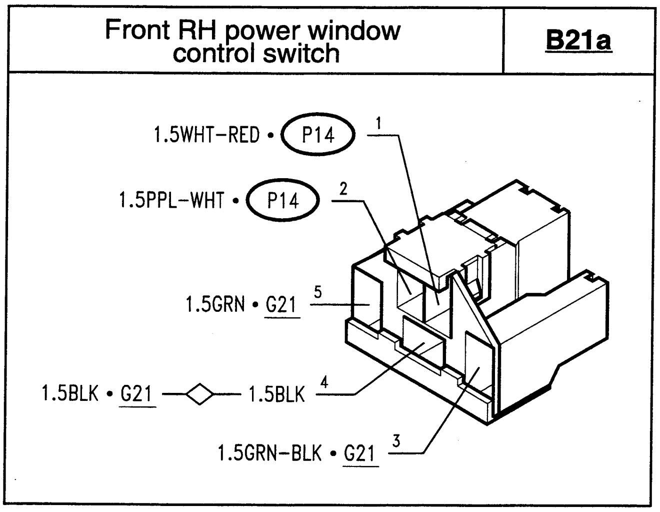

N.B.
The connectors are seen from the cable inlet side; only the electronic control units with combs with a high number of pins are shown from the connection side between combs and control unit.

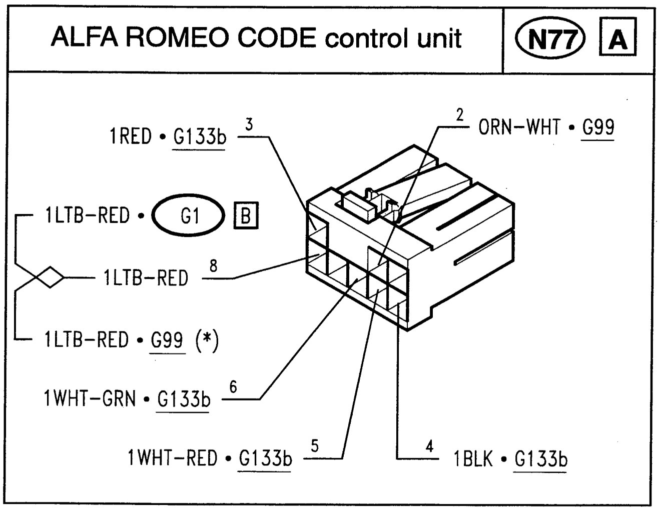

The connectors **are listed in alphameric order according to the IDENTIFICATION CODE** (corresponding to the component to which they are connected, see Key to components): this way it is possibie to distinguish them by their shape and connections pin by pin.

If a connector is specific for a determinate model-version, the reference of the model-version will be given.

The same may be said for the strips which idenntify the colour and cross-section of the cable, i.e. any specificity will be given at the side.

The symbols used to distinguish the model-version are the following:

SPIDER	"Spider Cars"
GTV	"GTV" Cars
3.0 v6	3.0 V6 engine
2.0 T.S. 16v	2.0 TWIN SPARK 16 valve engine
❄	Air-conditioned versions
✤	Heated versions
🚗	Spider with automatic hood

Some connectors are fitted with a secondary lock which prevents the cable terminals from being accidentally separated from the connector itself.
NOTE: ensure that the secondary lock is removed before disconnecting a cable from the connector. When refitting reposition the secondary lock after connecting all the cables.
The "secondary lock" may be one of a variety of types depending on the connector to which it is fastened, as shown in the following examples.

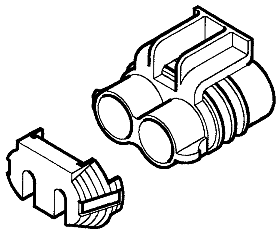

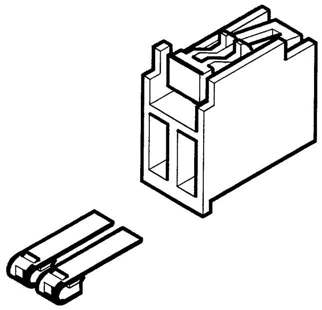

ELEMENTARY CHECKS FOR ELECTRICAL LINES AND COMPONENTS

Series of elementary checks and tests are given below which refer to the lines and the most common components in the electric system of the vehicle.
It will be necessary to refer to them when the fault diagnosis pages indicate that the continuity, intactness, or correct operation, etc. of a single component should be checked.
All of these tests can be carried out using a **multimeter** with a resistance scale (ohmmeter), voltage scale (volt meter) and current scale (ammeter).
NOTE: before any readings are taken it is advisable to check that the terminals of the contact are free from rust or foreign particles (oil, dirt, etc...). If necessary, they should be accurately cleaned.

During diagnosis operations it is often necessary to simulate the closing of a contact or short circuit a switch.
In these cases a **bridge** is used: this simple device is formed of an insulated cable of adequate length, with the insulation stripped at the ends or fitted with terminals; a floating fuse holder is inserted in the middle of the cable.
A fuse of the suitable capacity is fitted on the fuse holder each time to protect the circuit being short circuited.

In order to locate fast voltage changes, for example the control voltage at the terminals of the door lock gear motors, the use of a **polarity detector** is recommended.
The polarity indicator shows if there is a difference in potential between the prod and the terminal, regardless of its value and polarity.
This is signalled by the turning on of a telltale, for example a green one if the terminal is connected to earth and the pushbutton to a positive, while for example the red telltale lights up if the terminal is connected to the positive and the prod is connected to earth.

LINE CHECKS:

MEASURING ELECTRICAL CONTINUITY:

NOTE: first of all ensure that the supply to the component in question is disconnected! This applies to all resistance measurements.
Set the multimeter to measure ohms and set it to read 0 Ω when the two prods of the instrument are touched together.

Place the two prods of the instrument at the ends of the component or cable being examined and read the resistance: 0 Ω means electrical continuity in a cable, fuse, etc..., ; ∞ (infinitive) means a cut off.
For certain components, such as resistances, sensors, electric motors, etc... a specific value should be read corresponding to the impedance of the component itself.

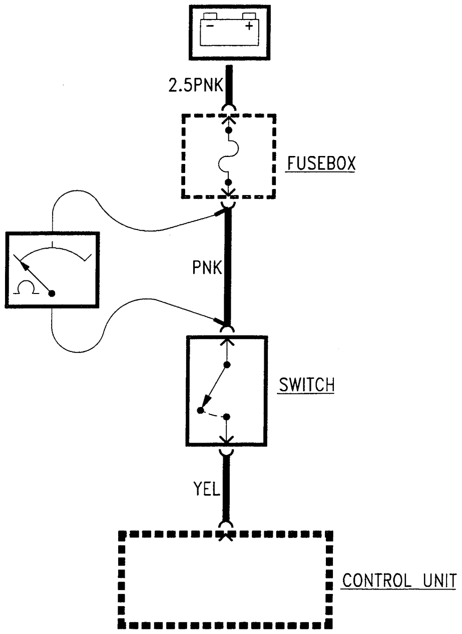

MEASURING VOLTAGE:

NOTE: before taking any readings, ensure that the component or line being examined is connected to the power supply as shown in the wiring diagram.
Set the multimeter to measure volts.
Connect the negative prod of the multimeter to earth (for example the battery earth).
Connect the positive prod to the point to be measured and take the reading selecting the appropriate scale.
If the exact voltage at various points along a line or circuit is known, the affected part can be quickly located.

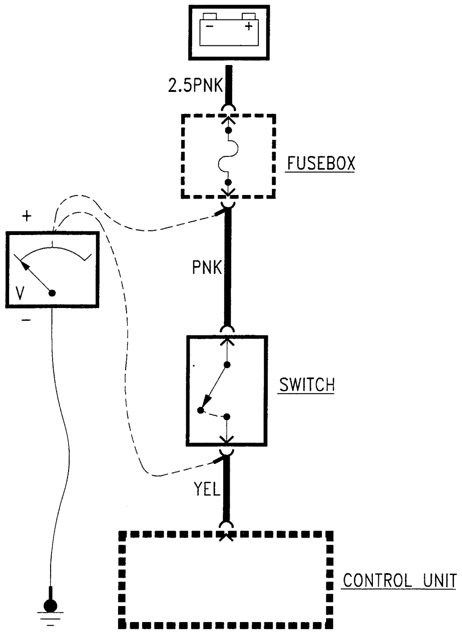

MEASURING VOLTAGE DROP:

NOTE: before taking any readings, ensure that the component or line being examined is connected to the power supply as shown in the wiring diagram.

Set the multimeter to measure volts.

Connect the two prods of the voltmeter to the two points where you wish to know the difference in voltage and take the reading selecting the appropriate scale; the positive prod should be connected to the part nearest the power source.

As the connectors and contacts are designed in such a way as to minimise loss of voltage, a value of above 1 V indicates that there is a problem in the stretch being measured.

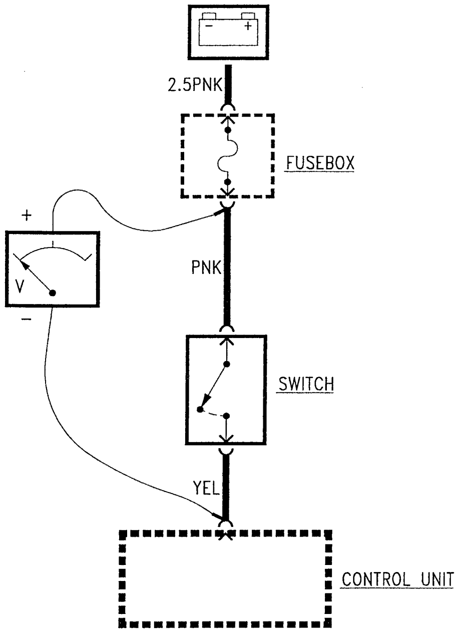

CHECKING FOR A SHORT CIRCUIT:

using the volt meter:

NOTE: before taking any readings, ensure that the component or line being examined is connected to the power supply as shown in the wiring diagram

Set the multimeter to measure volts.

Remove the fuse of the circuit concerned (which will be burnt out) and disconnect the charge.

Connect the prods of the multimeter to the fuse terminals; the positive prod should be connected to the part nearest the power source.

If the voltmeter gives a reading indicating that voltage is present, part of the circuit will be short circuited to earth (bared, worn, pinched wire, etc..); the part concerned can be located by moving the wire to find a point in which the reading is not 0 V.

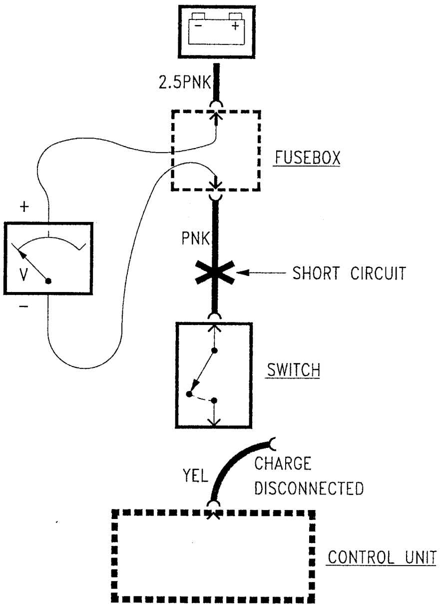

using the ohmmeter:

NOTE: first of all ensure that the supply to the component in question is disconnected!

Set the multimeter to measure ohms and set it so that the reading is 0 Ω when the two prods are touched together.

Remove the fuse of the circuit concerned (which will be burnt out) and disconnect the charge.

Connect one prod of the instrument to the terminal of the fuse nearest to the charge and the other to a good earth point.

If the Ohmmeter shows a resistance of 0 Ω, or very low, part of the circuit will have been short circuited to earth (bared, worn or pinched wire etc..); If the resistance is ∞ (infinitive), then in that particular stretch the circuit is intact. The part involved can therefore easily be located moving the cable to find out the positions in which the ohm rating is not ∞ (infinitive).

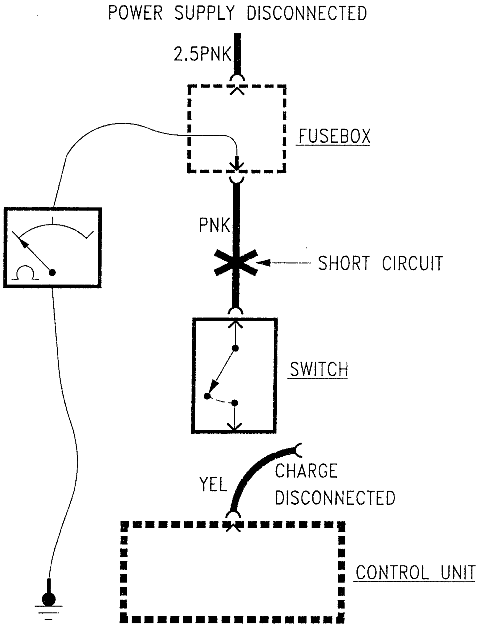

NOTE: measurements taken with a voltmeter are more accurate and if both options are possible the voltmeter should be chosen.

MEASURING CURRENT

It may sometimes be necessary to measure the current absorption: in this case the multimeter will not suffice. It is therefore mecessary to use another instrument such as a snap on ammeter, operating as follows:

- insert the lead of which the current is to be measured in the pincers, suitably connected to the multimeter set for volt measurement (mV);
- **NOTE:** ensure that the flow of current (from positive towards earth) is the same as indicated on the pincers;
- take a reading in mV which corresponds to the value of the current in A.

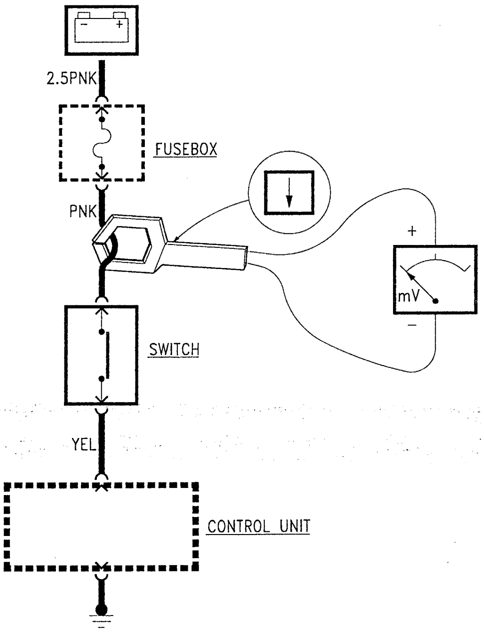

TESTING COMPONENTS:

BULBS:

NOTE: a bulb is characterized by two values: voltage and wattage rating. The resistance of the bulb is lower as its wattage increases. For example, a headlight bulb (12V-45W) will have a much lower resistance than an instrument panel warning light bulb (12V-3W). To check whether a bulb is damaged or not, remove it and connect the prods of a multimeter set to measure ohms to the terminals of the bulb itself: a finite resistance rating (lower or higher as mentioned above) indicates that the bulb is working, whereas a resistance value of ∞ (infinitive) means that the filament is damaged.

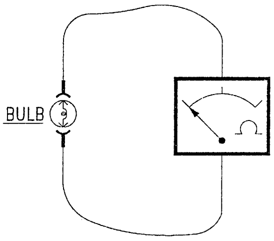

HALOGEN BULBS:

Halogen lamps have the bulb made of quartz instead of glass: due to the high temperature reached when the bulb is working, the presence of grease on the bulb surface causes "devitrification" of the quartz, thereby lowering its luminosity. Therefore, halogen bulbs must be handled by the metal collar taking care not to touch the bulb with the hands: should this occur, carefully clean the bulb with epthane or an equivalent degreasing product.

FUSES:

A fuse is an electrical conductor the cross section of which is such that if the load passing through the cable exceeds a certain value called fuse amperage, it will blow and interrupt the circuit.
If it is not possible to see visibly whether the fuse filament is intact or not, it can be checked by connecting the prods of the multimeter set to measure ohms to its terminals: a 0 value (0 Ω) means that the fuse is still working, whereas a resistance of ∞ (infinitive) means that the filament has "blown".

CAUTION!
Before changing a fuse the cause of the damage to it should be eliminated. If the fuse supplies more than one circuit, it might have blown due to a failure on a different circuit than the one suspected.

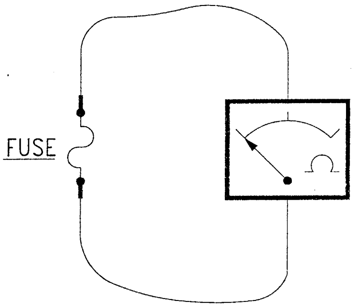

TABLE OF FUSE COLOURS

Standdard fuses (for example those of fusebox **G1**) are identified according to a colour correlated with the amp rating:

AMP.	COLOUR
7.5 A	Brown
10 A	Red
15 A	Light blue
20 A	Yellow
25 A	White
30 A	Green

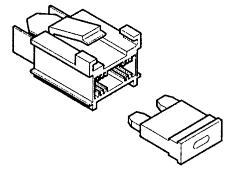

The **wander "maxifuses"** are distinguished according to their colour:

AMP.	COLOUR
40 A	Orange
50 A	Red
60 A	Light blue
70 a	Yellow

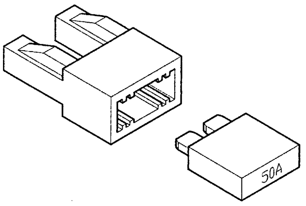

RELAYS:

In its simplest form, a relay is composed of a coil and a contact: when "excitation" or "drive" voltage is applied to the ends of the coil, the contact closes.
Normally the coil terminals are identified as pin 85 and 86, while the contact terminals are pin 30 (from the power supply) and pin 87 towards the load.
There may also be two output pins towards the load: 87 and 87a when the contact closes simultaneously on both; 87 and 87b when it closes separately.
The contact can also be a switch and close itself on one pin (87a) at the same time as opening the other (87).
(For the different types of relays refer to the previous table of component symbols).
To check a relay, connect pins 85 and 86 with a 12 V power source (the coil does not have a polarity and therefore the two pins are interchangeable) and measure with the multimeter set to read ohms: when the coil is "energized" (between the ends of the coil there will be a difference in voltage of -12 V-) the multimeter should read continuity (0 Ω) between pin 30 and pin 87 (or 87a or 87b); conversely, when the coil is not energized the multimeter should read an open circuit (resistance ∞ -infinitive-).

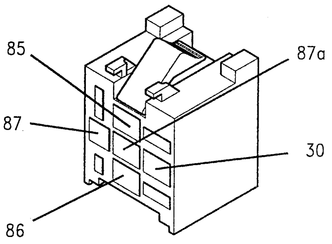

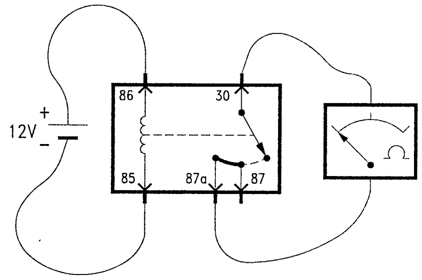

In a switching relay, the check will consist in the passage from continuity to open circuit on one pin and vice-versa on the other.
One of the more frequent failures on relays is "locking" of the contact: this can be identified immediately as the ohm signal does not vary when activating or deactivating the coil (always 0 Ω or always ∞).

NOTE: some relays have a built-in fuse: this must always be checked separately, before checking the relay.
In other relays a resistance is placed in parallel to the excitation circuit, in others a diode protects the excitation: in all these cases, the method for checking the operation of the relay does not differ from the one given above.

THERMAL CONTACTS:

Thermal contacts change their state (circuit open or closed) when a certain temperature is reached.
NOTE: they can be N.C. (normally closed) or N.O. (normally open): in the diagrams they are shown in their rest position.
To check a thermal contact, remove it from the car and connect the terminals to a multimeter set to measure ohms.
Using suitable equipment (containers which can be heated and cooled) check that at the pre-established temperature for each thermal contact, the resistance passes from 0 Ω to ∞ or vice-versa.

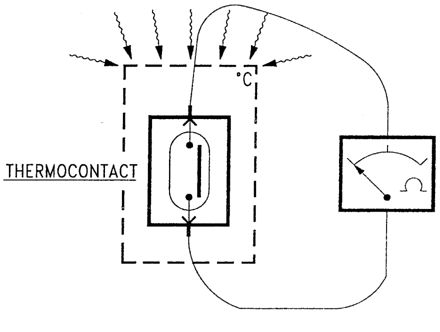

SENSORS:

These are components of varying types, but in general they are similar to contacts (N.O. or N.C.) which change their state when a certain measured physical value changes (for example temperature, see thermal contacts, or pressure etc.). For these components the same rules apply as for checking thermal contacts.
Other sensors measure specific values and emit a signal which is proportional to them: as each occasion arises, these will be given in the table load diagram, through which it will be possible to locate the correct resistance or voltage ratings and check them using a multimeter.

RHEOSTATS:

Rheostats are variable resistances: when voltage (12 V) is applied to the main terminals, the output signal from the third terminal is changed by a mechanical action (eg. rotating an adjustment washer....).
To check correct operation connect one prod of a multimeter set to measure ohms to one of the main terminals and the other to the third terminal: by acting on the adjustment washer for example, the resistance measured should change noticeably.

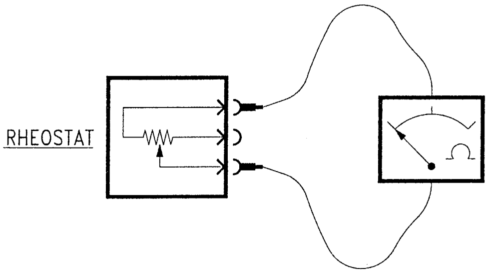

TERMOSTATS/PRESSURE SWITCHES:

These are instruments which emit a signal which is directly proportional to the temperature/pressure they measure. From a schematic electrical point of view they are rheostats of which the resistance varies with the readings taken.
To check these devices therefore, follow the indications given for rheostats using suitable equipment to enable the temperature or pressure to be changed.

ELECTRIC MOTORS/SOLENOIDS:

Electric motors and solenoids are mechanisms which are essentially composed of electrical windings and for this reason checking the operation of these components consists in verifying if electrical continuity has reached the windings or not; then proceed as mentioned above using the multimeter.
It is also possible to check a component when it is installed on the vehicle: disconnect it and check the operation (for instance the rotation of the motor) connecting the terminals to a 12 V power source.

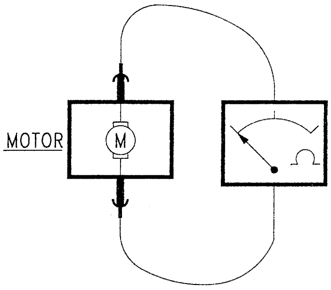

N.B. inverting the polarity (positive and earth) of an electric motor inverts its direction of rotation: therefore, particular attention must be paid that the two terminals are connected correctly, using for example a polarity detector.

NOTE: for these mechanisms it is possible for faults to be caused by mechanical and not electric problems. In this case the other groups of the manual should be consulted.

EARTH POINTS:

An earth point is not correctly connected if oxidation is present, if it is not securely fastened to the body or if the cables reaching it are bared or damaged.
To check whether an earth point is really at "0 potential", connect it to the prod of a multimeter set to measure ohms; connecting the other prod to the battery negative pole the resistance reading should be = 0 Ω; if this is not the case, carefully inspect the earth as it is faulty.

SOLDERS:

Numerous solders between wires are present on the vehicle: they are carried out using the ultrasound technique which makes them extremely reliable and safe.

If it becomes necessary to check a solder, simply check the continuity between the different wires which converge on it: if this proves unsuccessful the solder cannot be repaired and the wiring must be replaced.

CONTROL UNITS AND ELECTRONIC DEVICES IN GENERAL:

Nowadays, electronic control units are the most important components of the car. Because of this reason, they are almost 100% reliable as their protection circuits have been designed especially for this purpose.

Because of their complexity, electronic control units require special diagnosis devices as the use of the multimeter is neither sufficient nor advisable.

Generally, the control units are provided with a special diagnosis socket for connection to the ALFA ROMEO TESTER.

These components cannot be dealt with in a general context, therefore reference should be made to the single fault- finding procedures in the specific sections.
You are however reminded that it is not possible to work on these electronic components internally and they have to be replaced if found to be faulty.

GENERAL PRECAUTIONS AND SAFETY MEASURES

Before carrying out any work on the electrical components, carefully follow the precautions given below:

- Remove rings, wrist-watches or other metal objects.
- Disconnect one of the battery terminals each time an electrical component has to be removed.
- Only use original Alfa Romeo spare parts when a component needs replacing.

When working on the electric system of a car never forcibly pull wires or cables, as this might accidentally disconnect them from connectors or terminals.
Disconnect all the control units and electronic devices when arc welding on the vehicle body.

AVOIDING ELECTRICAL ARCHING

Even if the voltage of the electric system is only 12 V, the power of the battery can cause high voltage in the event of a short circuit causing arches or sparks that can cause a fire hazard or direct danger to the operator.

BEWARE OF HIGH VOLTAGE

The electronic ignition system generates voltages of 20.000 V and over which could be very dangerous, especially to peole suffering from heart problems.
Therefore, always proceed with the utmost care when operating on or near these components.

AVOIDING FIRES

Do not smoke while working near the battery or components containing fuel or other engine fluids.

HEAT SOURCES

When it is necessary to operate on components which are subject to heating during use (eg. halogen bulbs), or inside the engine compartment when the engine is still warm, particular care must be taken to avoid burns or damage to tools or components.

ELECTRIC SYSTEM OF THE CAR - POWER SUPPLY

INDEX

ELECTRIC SYSTEM OF THE CAR

FOREWORD

All the electric/electronic systems and installations of the car are supplied by the battery with 12V current.

The lines through which the battery voltage is distributed to the various services are protected by by special wander fuses or fuses in the fusebox which are suitably sized for the foreseen loads.

The fusebox contains a series of relays and fuses and also the lines and control signals from the switches and steering wheel controls (steering column lever unit) converge on it; the supply and control lines for the different services branch off from the fusebox.

PROTECTION AND SAFETY SYSTEMS

The entire electric system for the Spider/GTV has been designed and made taking into consideration the latest directives on the subject of safety and protection, especially against the possibility of fire.

There are two main types of protection:

- **active protection**, to reduce the possible causes of failure "at the source"
- **passive protection**, to minimise the effects of a possible failure.

The first category involves attentive design of the wiring harnesses, accurately positioning and anchoring them, and carefully defining suitably shielded and protected routings.

For this reason, the alternator and starter motor cables have been appropriately modified through the adoption of protection caps, etc.
A "reinforced" sheath has been adopted for certain sections of particularly exposed wiring.

Another form of active protection is the insertion in the original wiring harness of provisions for the more frequently requested optional items (radio, alarm, etc.) to reduce the risk of incorrect work on the cables by unskilled persons.

The passive protections include all the measures, which have always been adopted on vehicles, to reduce high failure currents (overload and short circuit).

All the fuses in the circuit have been sized according to the nominal absorption rating of the loads that can be activated simultaneously and to ensure operation in the event of short circuit.

Some basic supply cables were NOT protected before.

Now, through the adoption of a special **high capacity (150A) fuse**, it is possible to protect all the supply lines, with the exception of the starter motor cable (battery-motor) and the charging cable (motor-alternator): these cables are protected by a fireproof sheath and covered with metal piping.

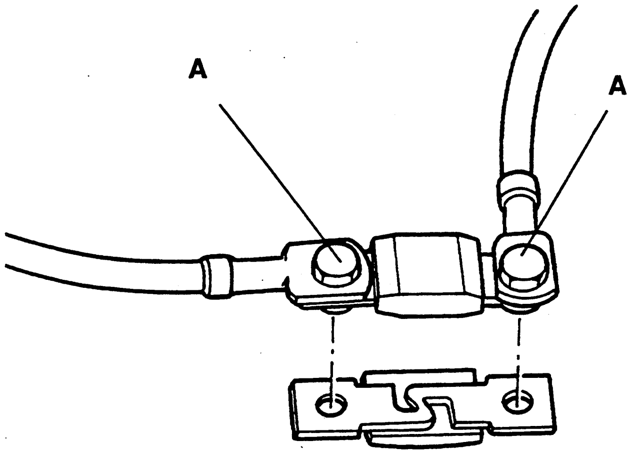

"MEGA" general supply protection fuse: 150 A

In the event of replacement tighten the two fastening screws (A), working carefully and suitably balancing between the two screws to a torque of appr. 25 Nm, taking care not to use excessive force on the fuse as the copper melting element could get damaged.

IGNITION SWITCH

Some circuits are supplied continuously, also when the vehicle is stopped and the key disengaged, as they are connected directly to the battery (N.B. for safety reasons these lines which are "always hot" have been reduced to the minimum indispensable, in both number and the length of the cables involved: they remain only for those functions for which direct supply is expressly needed).

Other circuits are supplied turning the ignition switch **to the various positions**:

- inserrting the key and turning it to the first position "**MAR**" supplies a number of circuits, which are indeed defined as "key-operated";
- the second position - "**AVV**" - supplies the starter motor, disconnecting some of the other circuits (those which absorb a higher amount of power) thereby ensuring the highest flow of current to the starter motor;
- removing the key turning it in the opposite direction (and pressing the special pushbutton) the "PARK" position is engaged which supplies the side lights even when the key is removed.

In the wiring diagrams these different types of supply are shown schematically by the following symbols:

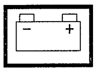

– line always supplied

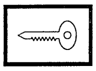

– line supplied with the key in the **"MAR" position**

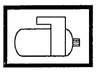

– line supplied with the key in the **"AVV" position**

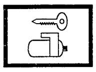

– line supplied with the key engaged in both **of the previous positions**

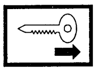

– line supplied with the key in the **"PARK" position**

WIRING DIAGRAM POWER SUPPLY

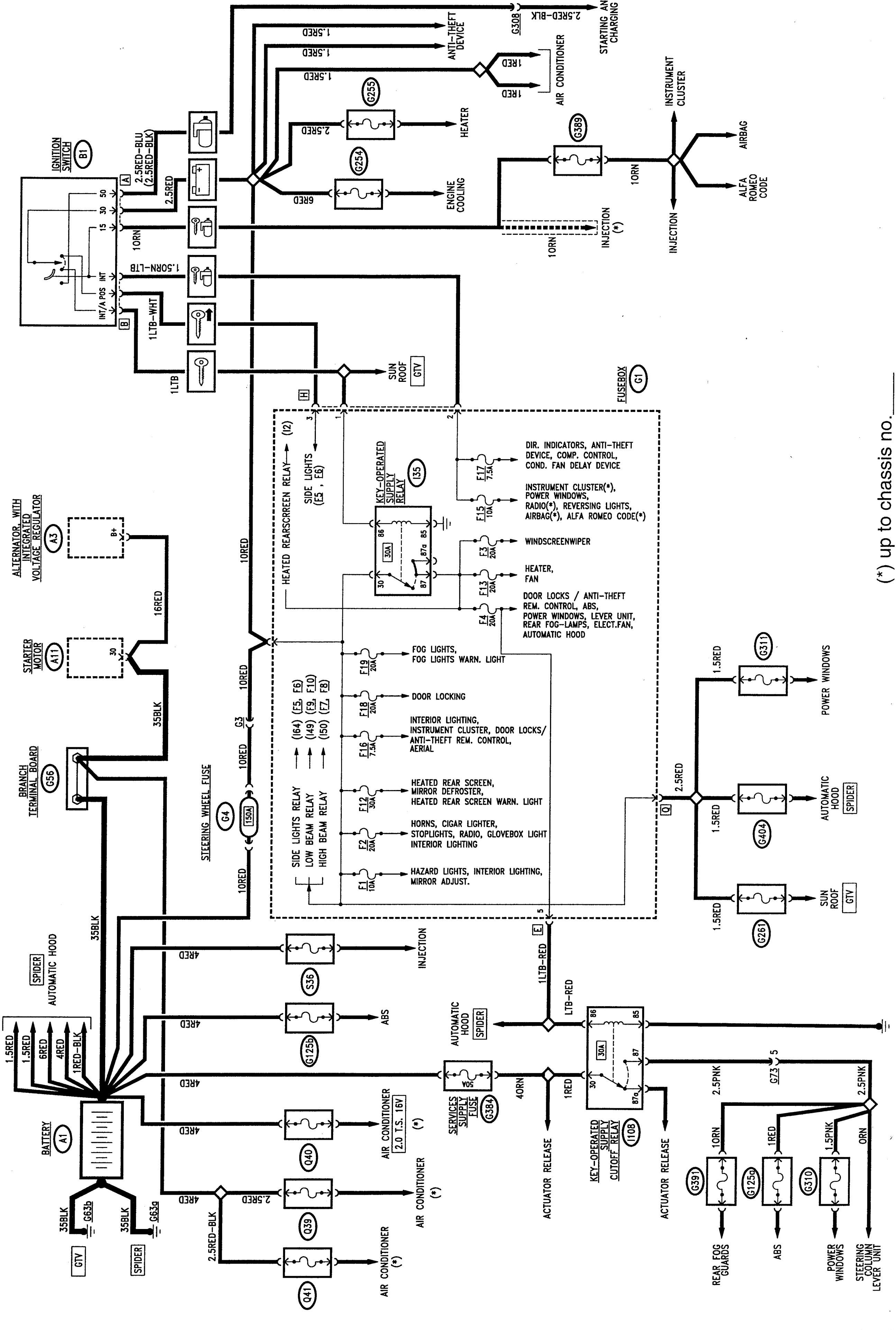

(*) up to chassis no.______

FUNCTIONAL DESCRIPTION

The supply leading from the battery **A1** is divided among various lines leading from the battery itself and from the branch terminal board **G56**, from where numerous cables lead, directly supplying some systems (protected by special "wander" fuses) and the fusebox **G1** on which the 150A fuse **G4** is to be found; inside the fusebox the power is distributed to the various circuits, protected by the corresponding fuses (see the "Fusebox" section). In addition, certain supplies for the various systems lead from the branch point itself and from connector Q.

Besides the **key-operated supply relay I35**, located in **G1**, which supplies a series of services when the key is at "RUN", but cut out during starting, there is also the **key- operated cut off relay I08** which operates in the opposite manner, i.e. only supplying certain services when the key is at "STOP" and cutting them off when the key is at "RUN", switching the supply to other services which therefore receive the "key-operated" supply.

This relay is supplied by a special line protected by fuse **G384** (50A).

The battery recharging line leads from the alternator **A3**, through the starter motor **A11**.

The ignition switch **B1** is also supplied via the terminal board **G56** at pin 30 of connector A.

The line that leaves pin 50 of connector A corresponds to the "STARTING" position and it supplies the starter motor **A11**.

The line leaving pin INT/A of connector B - "RUN" position - via the fusebox **G1**, supplies the "key-operated" circuits, which are however disengaged in the "STARTING" position.
The lines that leave pin INT of connector B and pin 15 of connector A supply, either directly or through the fusebox **G1**, the "key-operated" circuits which also remain engaged in the "STARTING" position.
Lastly, the line that leaves pin POS of connector B corresponds to the "PARKING" position and supplies the sidelights circuit inside the fusebox **G1**.

LOCATION OF COMPONENTS

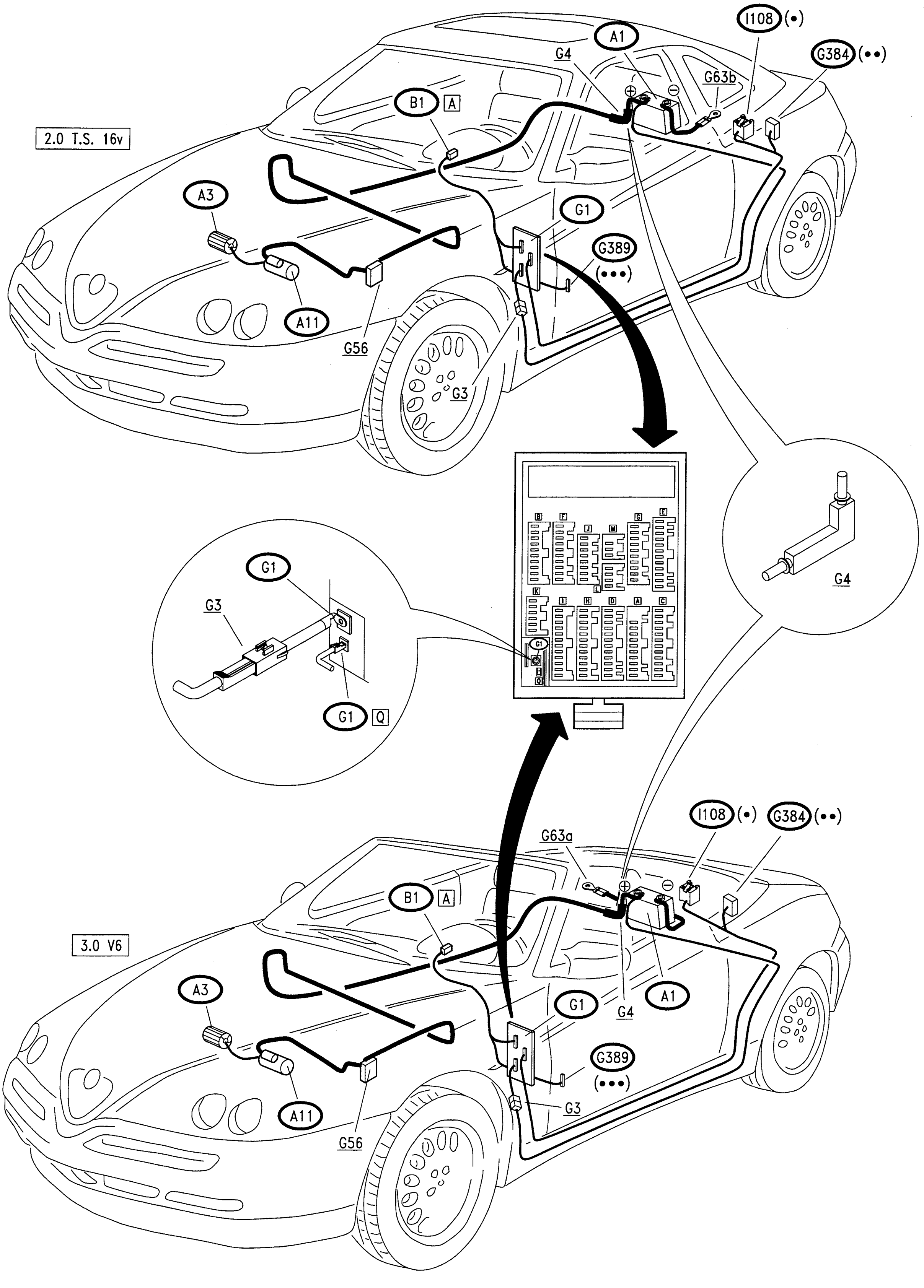

(•) Blue base
(••) Black fuse holder
(•••) Red fuse holder

LOCATION OF EARTHS

INDEX

GENERAL DESCRIPTION

The following diagrams show the diferent earths present on the vehicle and the connecting cables for each of them; each cable shows the circuit to which it refers and the component earthed through that line.

The earths shown are the following:

- **G53a**	Right-hand engine compartment earth
- **G53b**	Left-hand engine compartment earth
- **G55b**	Left-hand side panel earth
- **G60**	Injection wiring earth (2.0 T.S. 16v engine)
- **G63a**	Right-hand rear earth (SPIDER only)
- **G63b**	Left-hand rear earth
- **G92**	Earth for electric aerial
- **G131a/b**	Earths on engine upper cover (3.0 V6 engine)
- **G148b**	Earth under left-hand dashboard
- **G381**	Airbag earth

There is also an **earth braid**, which connects the power unit to the body.

NOTE: Using these diagrams it is easy to locate those circuits which are connected to earth by the same line: this simplifies faultfinding work in the event of problems affecting more than one system: for instance the oxidation of an earth can put several circuits and numerous functions out of order contemporaneously.

WIRING DIAGRAMS

G53a

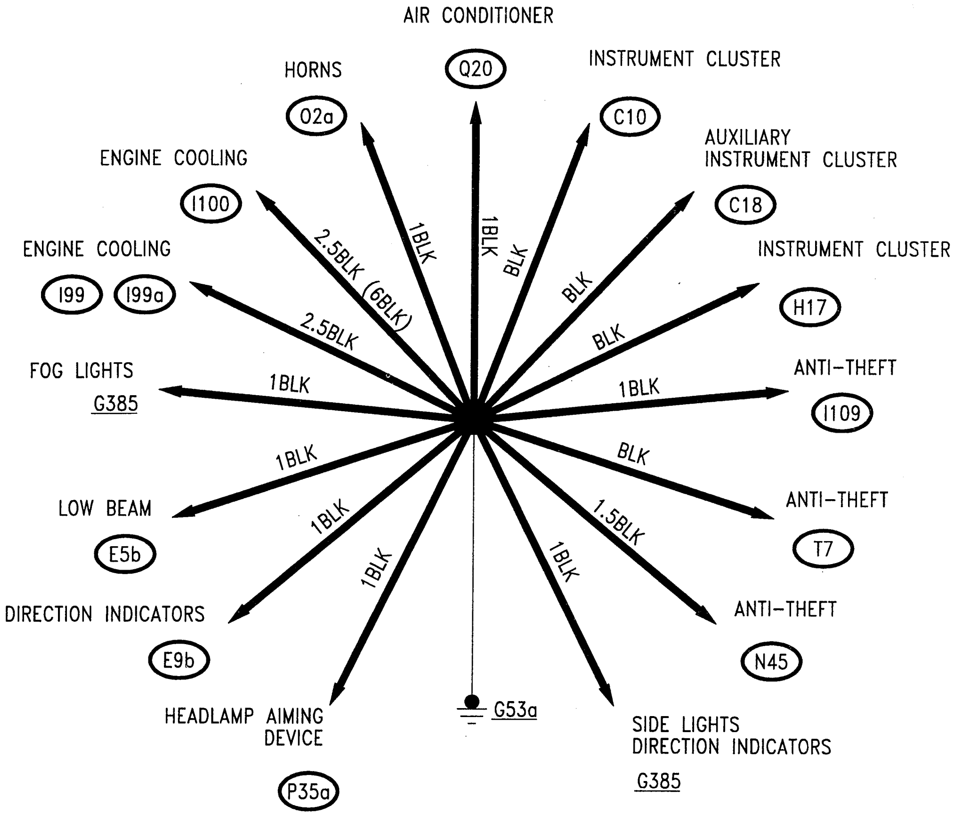

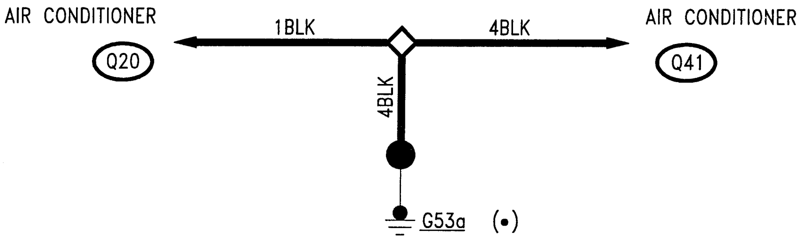

(•) 3.0 V6 and 2.0 TS only 16v up to chassis n°6023906

G53b

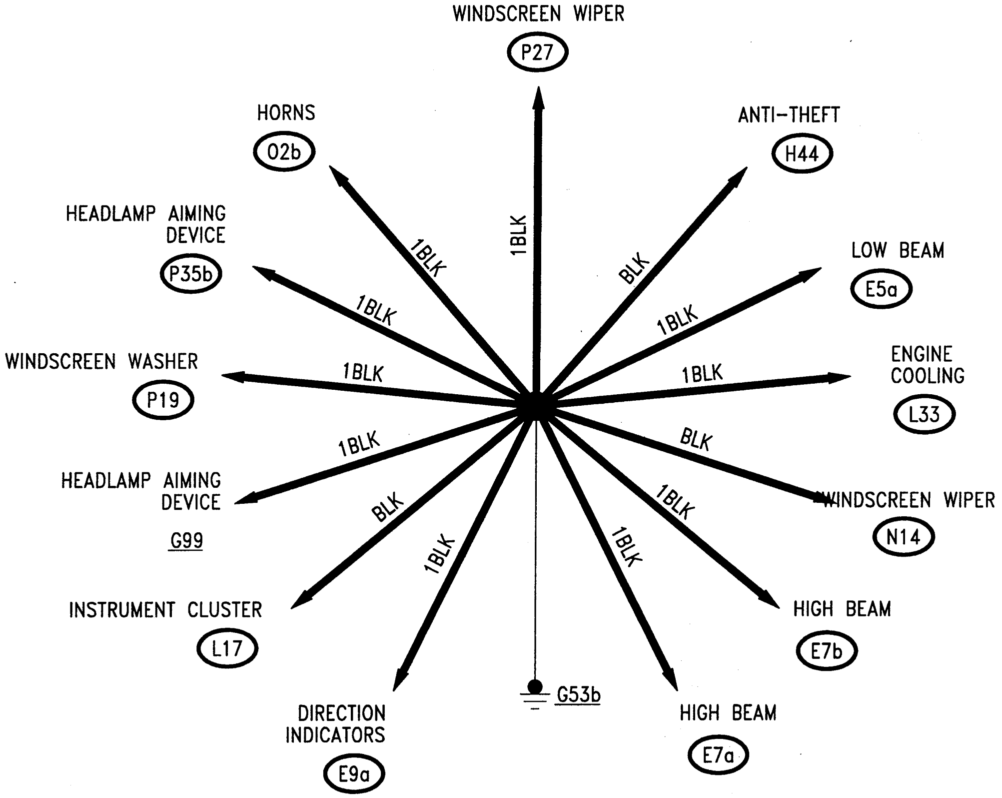
WINDSCREEN WIPER
P27
HORNS
02b
ANTI-THEFT
H44
HEADLAMP AIMING DEVICE
P35b
LOW BEAM
E5a
WINDSCREEN WASHER
P19
ENGINE COOLING
L33
HEADLAMP AIMING DEVICE
G99
WINDSCREEN WIPER
N14
INSTRUMENT CLUSTER
L17
HIGH BEAM
E7b
DIRECTION INDICATORS
E9a
HIGH BEAM
E7a
G53b
1BLK
BLK

G55b

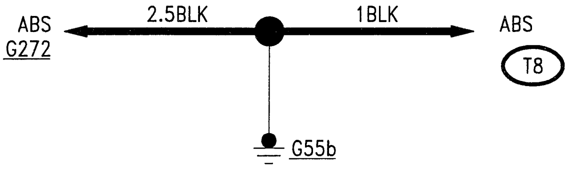

G60 (2.0 T.S. 16v MOTRONIC M2.10.3 engine)

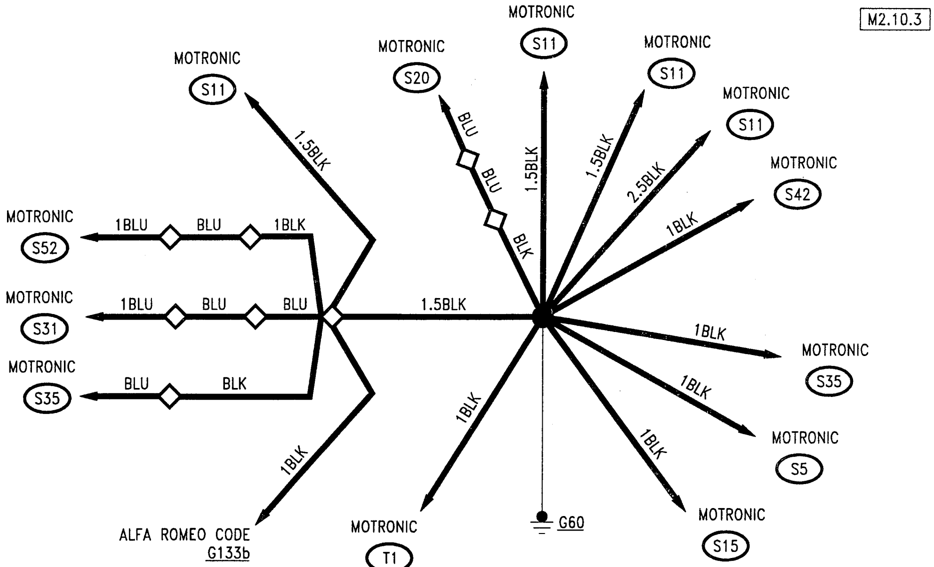

G60 (2.0 T.S. 16v MOTRONIC M2.10.3 engine)

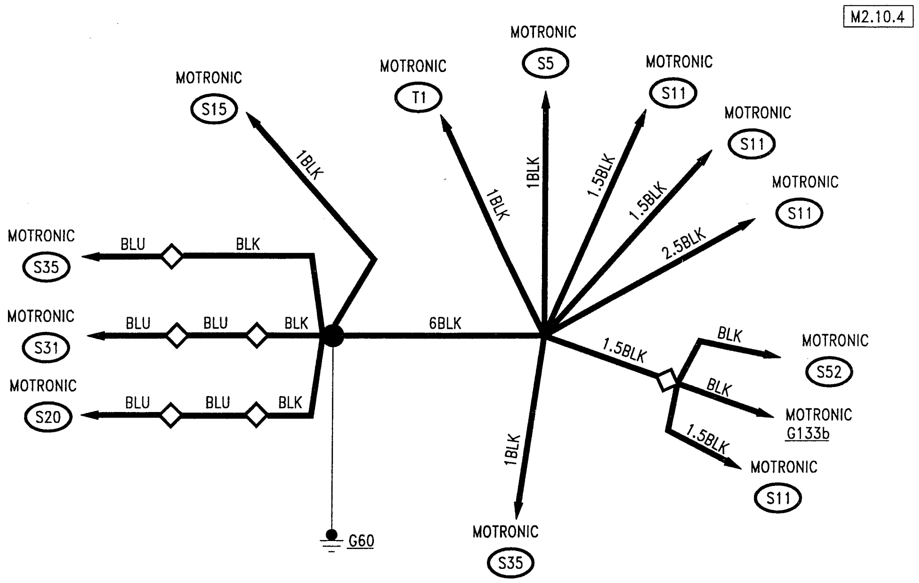

G63a (SPIDER)

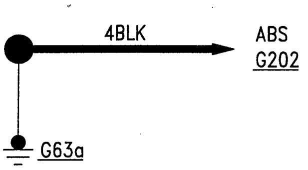

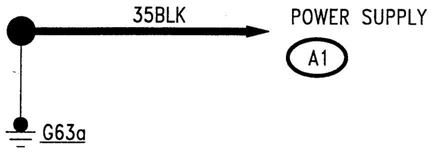

G63b (SPIDER)

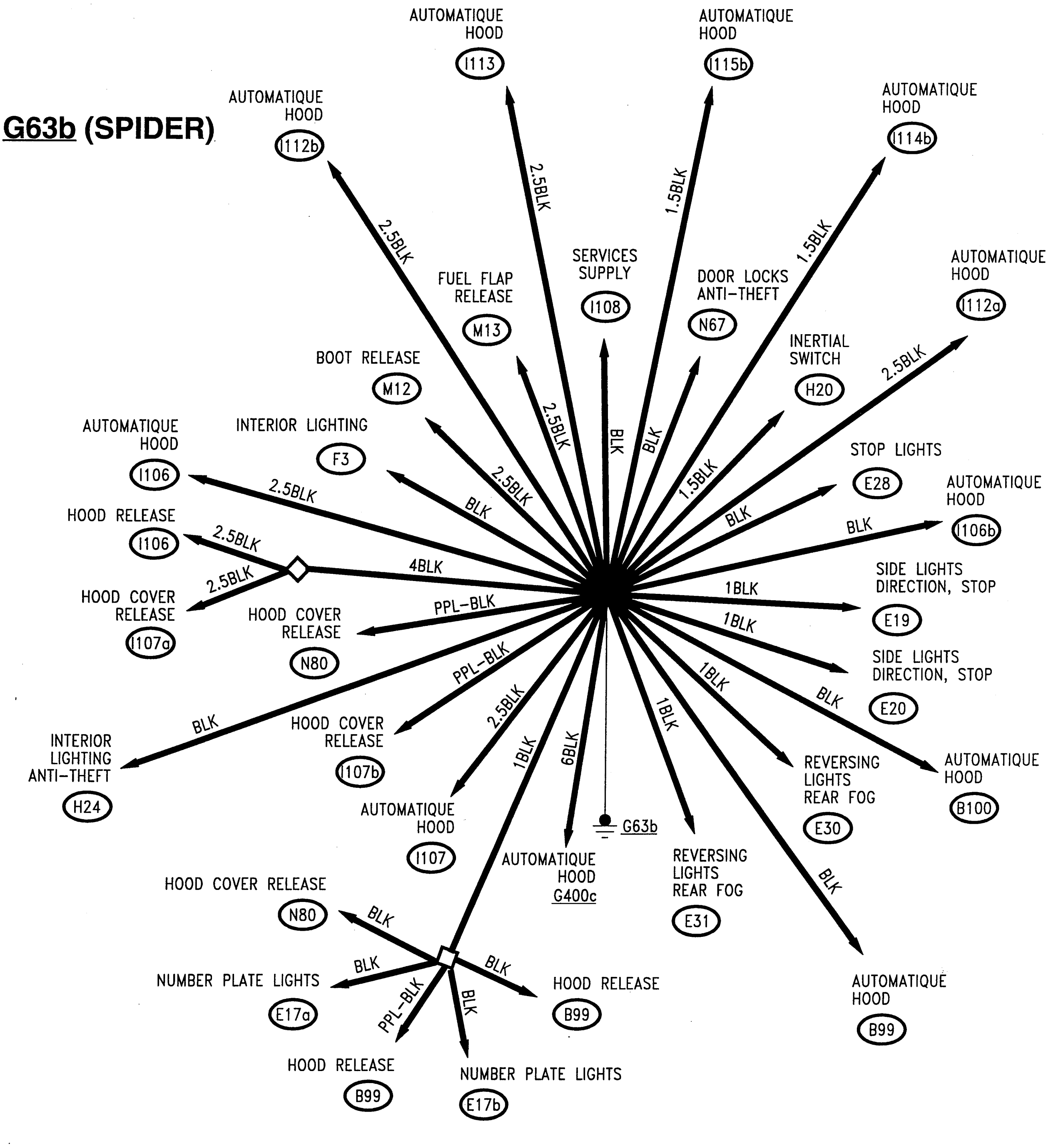

G63b (GTV)

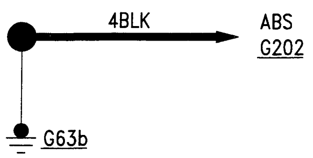
4BLK
ABS
G202
G63b

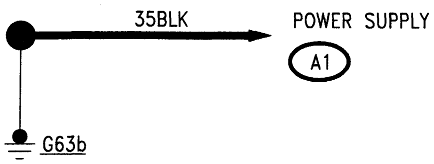
35BLK
POWER SUPPLY
A1
G63b

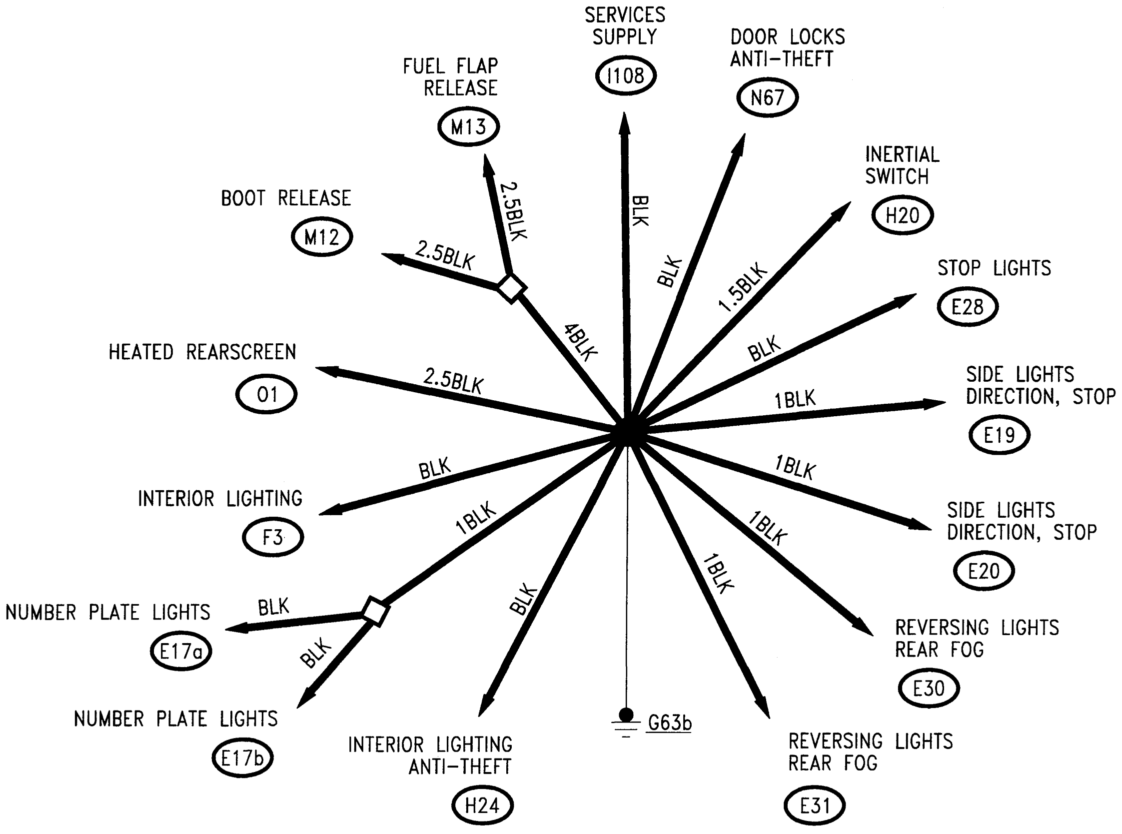
SERVICES SUPPLY
I108
BLK
DOOR LOCKS ANTI-THEFT
N67
BLK
FUEL FLAP RELEASE
M13
2.5BLK
BOOT RELEASE
M12
2.5BLK
4BLK
INERTIAL SWITCH
H20
1.5BLK
STOP LIGHTS
E28
BLK
HEATED REARSCREEN
O1
2.5BLK
SIDE LIGHTS DIRECTION, STOP
E19
1BLK
INTERIOR LIGHTING
F3
BLK
SIDE LIGHTS DIRECTION, STOP
E20
1BLK
1BLK
NUMBER PLATE LIGHTS
E17a
BLK
BLK
NUMBER PLATE LIGHTS
E17b
BLK
INTERIOR LIGHTING ANTI-THEFT
H24
G63b
1BLK
REVERSING LIGHTS REAR FOG
E30
1BLK
REVERSING LIGHTS REAR FOG
E31

G131a (3.0 V6 engine)

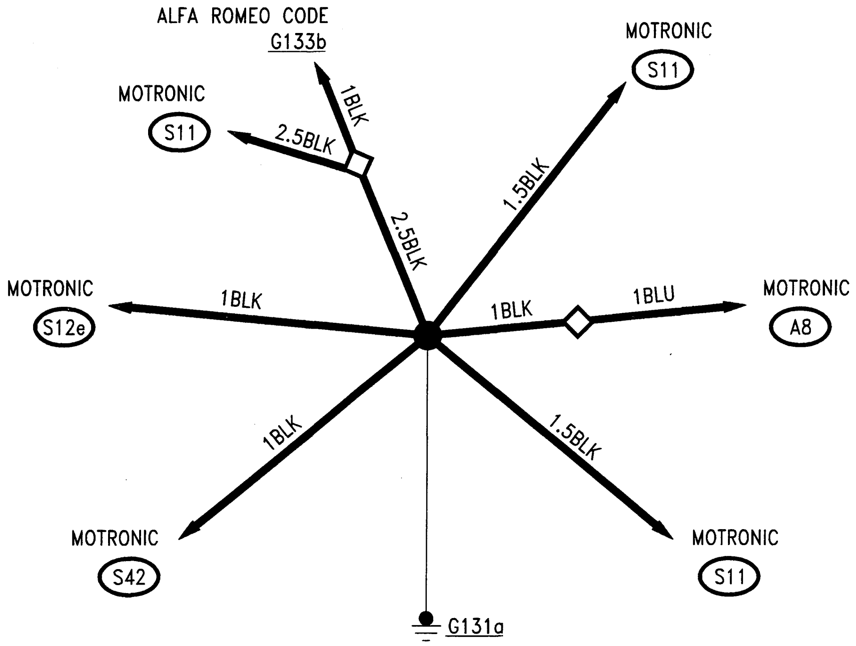

G131b (3.0 V6 engine)

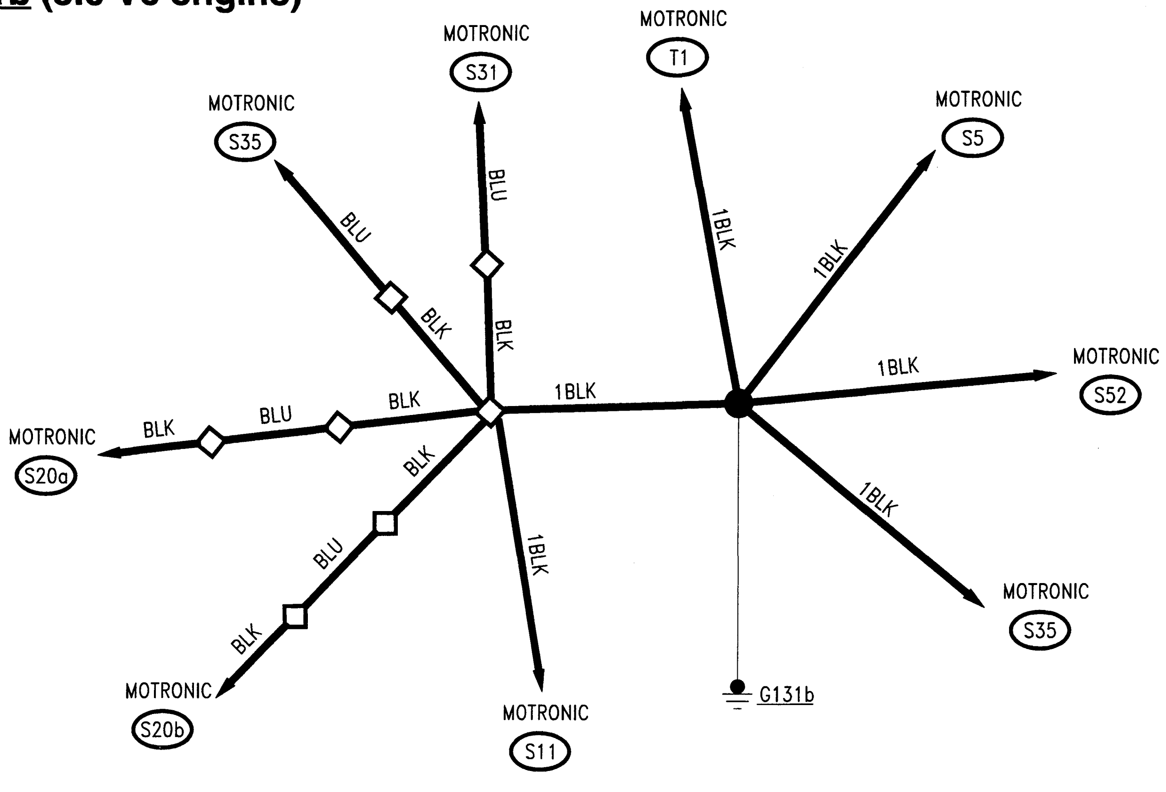

G148b

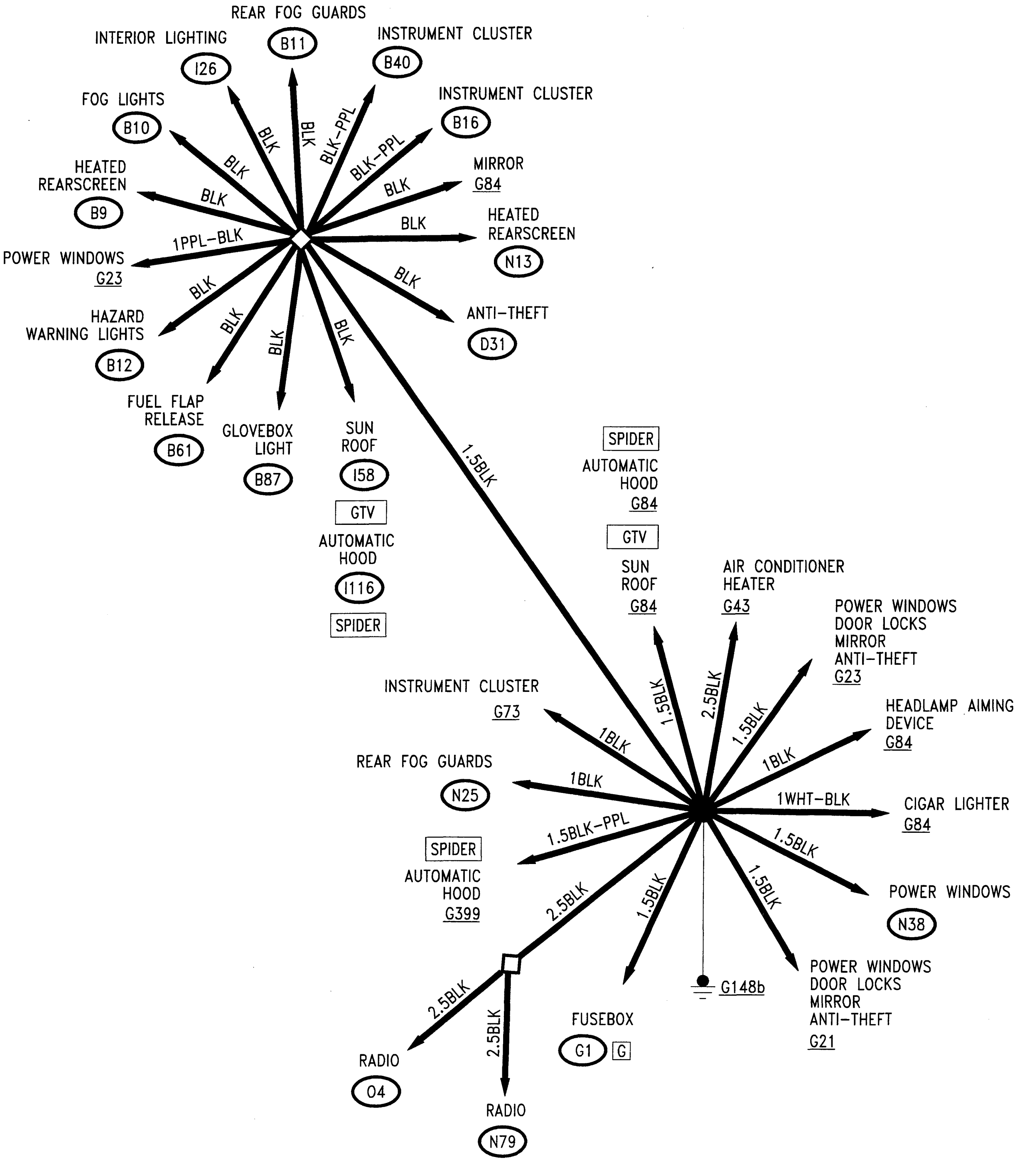
REAR FOG GUARDS
B11
INTERIOR LIGHTING
I26
INSTRUMENT CLUSTER
B40
INSTRUMENT CLUSTER
B16
FOG LIGHTS
B10
HEATED REARSCREEN
B9
MIRROR
G84
HEATED REARSCREEN
N13
POWER WINDOWS
G23
HAZARD WARNING LIGHTS
B12
ANTI-THEFT
D31
FUEL FLAP RELEASE
B61
GLOVEBOX LIGHT
B87
SUN ROOF
I58
GTV
AUTOMATIC HOOD
I116
SPIDER
BLK
BLK-PPL
1PPL-BLK
1.5BLK
SPIDER
AUTOMATIC HOOD
G84
GTV
SUN ROOF
G84
AIR CONDITIONER HEATER
G43
POWER WINDOWS DOOR LOCKS MIRROR ANTI-THEFT
G23
INSTRUMENT CLUSTER
G73
HEADLAMP AIMING DEVICE
G84
REAR FOG GUARDS
N25
CIGAR LIGHTER
G84
SPIDER
AUTOMATIC HOOD
G399
POWER WINDOWS
N38
POWER WINDOWS DOOR LOCKS MIRROR ANTI-THEFT
G21
1BLK
2.5BLK
1WHT-BLK
1.5BLK-PPL
G148b
FUSEBOX
G1
G
RADIO
O4
RADIO
N79

G92

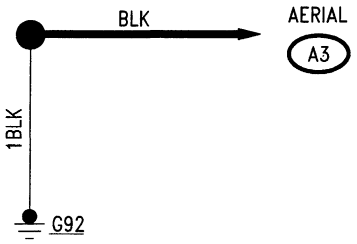

G381

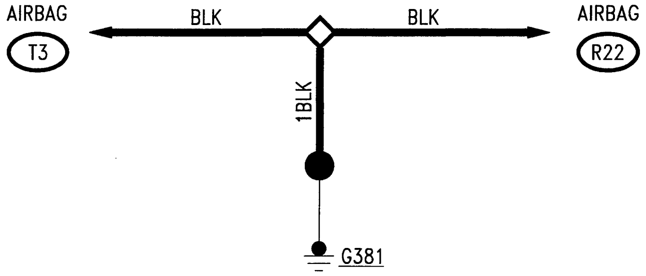

LOCATION OF EARTHS ON THE CAR

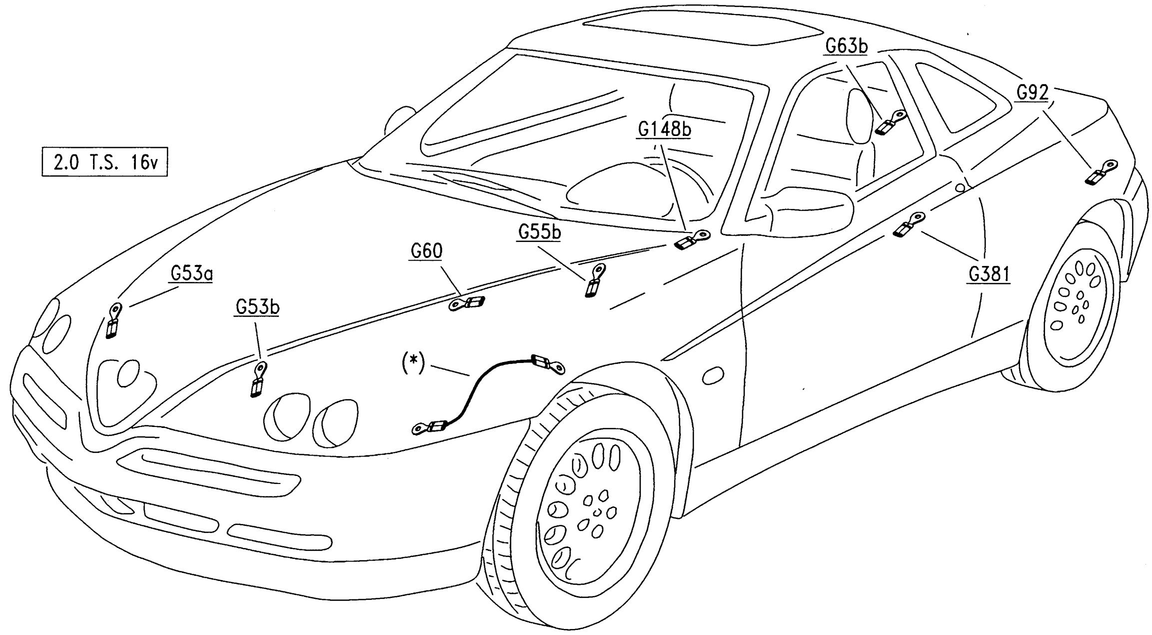

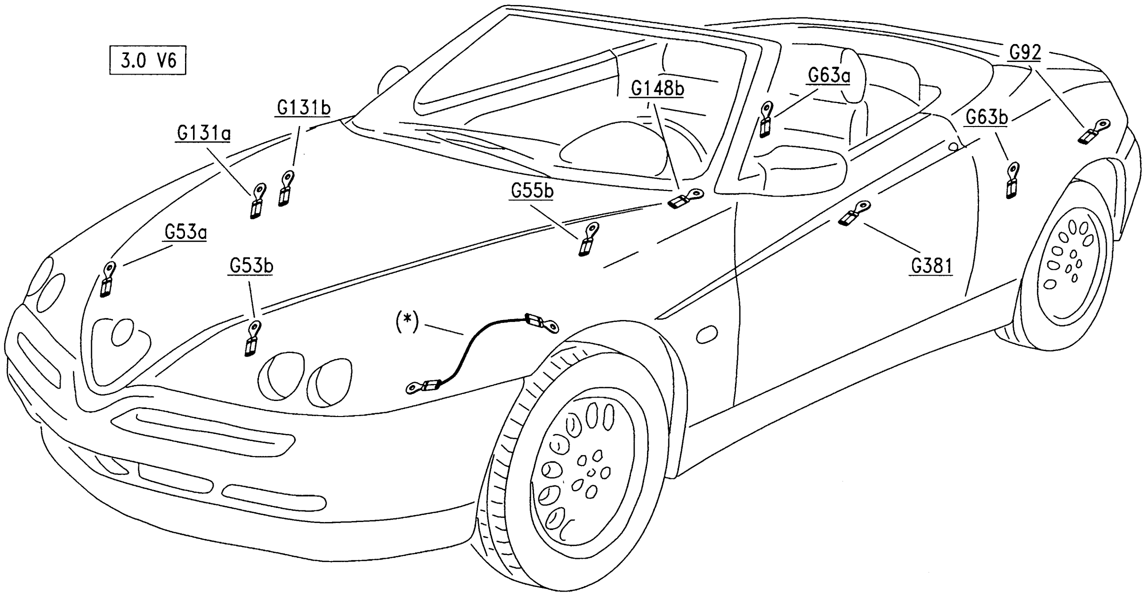

(*) earth braid between gearbox and body

FUSEBOX

INDEX

FUSEBOX

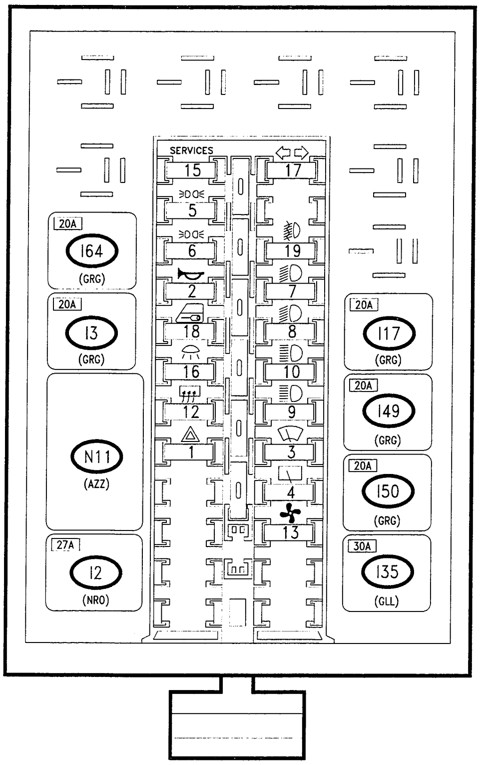

LOCATION OF FUSES AND RELAYS

RELAYS

I2	Heated rearscreen relay
I3	Horns relay
I17	Fog light relay
I35	Key-operated supply relay
I49	Low beam headlamp relay
I50	High beam headlamp relay
I64	Side lights relay
N11	Door locking control unit

FUSES (see following page)

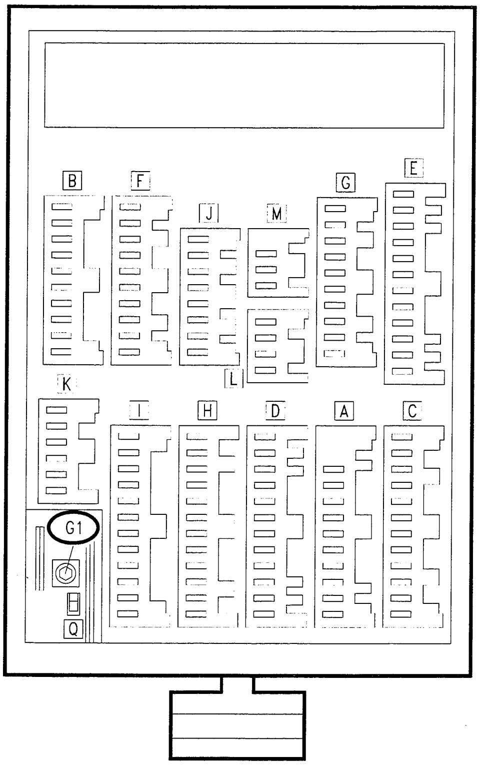

REAR VIEW, CONNECTOR SIDE

G1:
fusebox supply
Connector Q:
direct supply for other services
Connectors A,I:
Front wiring
Connectors B,D,F,G,H,L,M:
Dashboard wiring
Connectors C,E,M (*):
Rear wiring
Connector K:
provision for trailer
Connector J:
provision bridge required by specific regulations (daylights, fog lights, etc..)

(*) only up to chassis no.___

FUSES

FUSE			SUPPLY	PROTECTED SERVICES
SYMBOL	NO.	AMP.		
⚠	1	10A	🔋	Hazard warning lights, ceiling lights, wing mirror adjustment
📯	2	20A	🔋	Horns, cigar lighter, braking lights, radio, glove box light, ceiling lights
	3	20A	🔑 I35	Windscreen wiper
	4	20A	🔑 I35	Door lock/alarm remote control, ABS, power windows, steering column lever unit supply, fog guards, engine fan, automatic hood (SPIDER)
	5	10A	I64	Instr.cluster lighting, Controls lighting, LH rear side light, RH no.plate light, RH front sidelight, headlamp aiming device
	6	10A	I64	Controls lighting, RH rear side light, LH no.plate light, LH front side light, side lights warn light
	7	10A	I49	Right low beam headlight
	8	10A	I49	Left low beam headlight
	9	10A	I50	Right high beam headlight
	10	10A	I50	Left high beam, high beam warning light
	11	--		NOT USED
	12	30A	🔋	Heated rearscreen (GTV only), mirror defroster, rearscreen/defroster warning light
	13	20A	🔑 I35	Heater, fan
	14	--		NOT USED
SERVICES	15	10A		Power windows, reversing lights, airbag (*), ALFA ROMEO CODE (*), instrument panel (*), radio (*)
	16	7.5A	🔋	Front ceiling and boot light, instr. cluster, door remote lock control, electric aerial
⇦ ⇨	17	7.5A		Direction indicators, alarm control unit, compressor control, engine fan timer
	18	20A	🔋	Door locking device
	19	20A	🔋	Fog lights, fog light warning light

(*) only up to chassis no.____

WIRING DIAGRAM

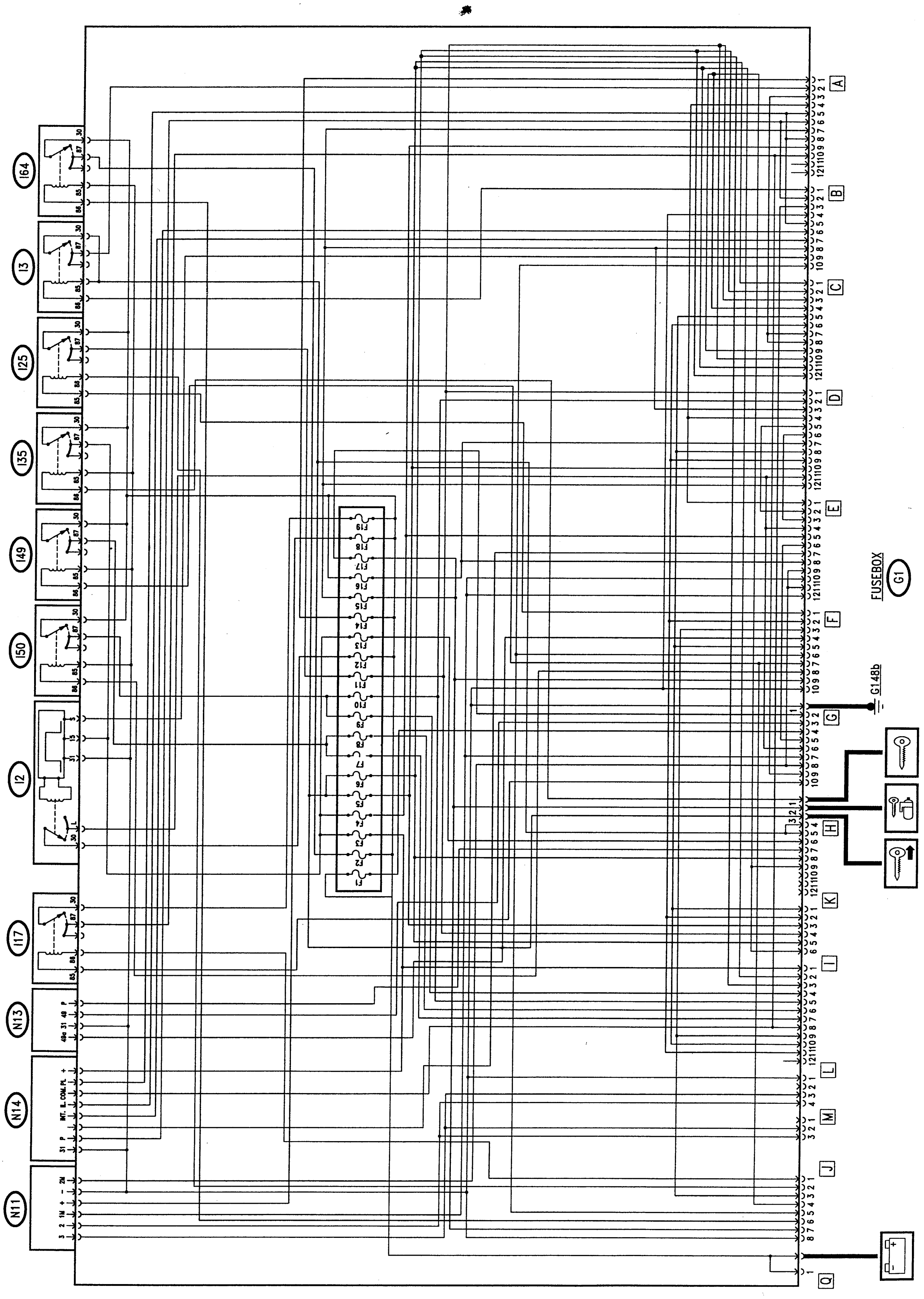

GENERAL DESCRIPTION

This section describes the complete printed circuit that makes the connections inside the FUSEBOX **G1**.

In the various diagrams referring to the individual systems and circuits only the lines associated with the case under examination are shown: this chart gives a complete, overall view of the entire fusebox **G1**.

The fusebox houses a number of relays and other devices, shown here with the corresponding codes, and the fuses (**F1**,...., **F24**).

NOTE: not all the output pins of the box **G1** are actually connected for all versions of the car: some lines therefore may be found to be redundant though they will be present on the printed circuit.

Next to the schematic drawings of the connectors a **list of output signals** from the different pins is given: this simplifies for instance faultfinding work on the different circuits affected. (NOTE: the letters N.C. indicate pins connected inside the fusebox but not used for the present versions of the car).

SUPPLY TO FUSEBOX

PIN	CIRCUITS	
-	Fusebox supply from terminal board	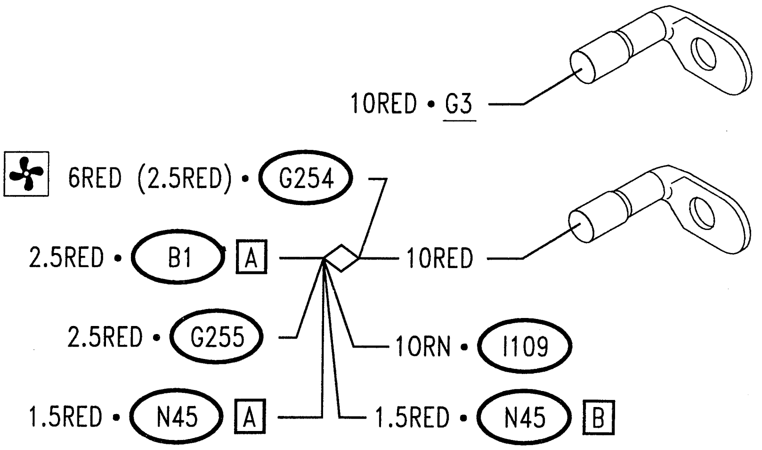
-	Direct supply for ignition switch, engine cooling fan, heater/conditioner fan, alarm control unit	

CONNECTOR A

PIN	CIRCUITS
1	N.C.
2	Horns
3	Reversing lights
4	Brake fluid level sensor
5	N.C.
6	N.C.
7	Supply for reversing lights, instrument panel, auxiliary panel (key-operated)
8	N.C.
9	Supply for engine cooling fan relay (key-operated)
10	Fog lamps
11	N.C.
12	N.C.

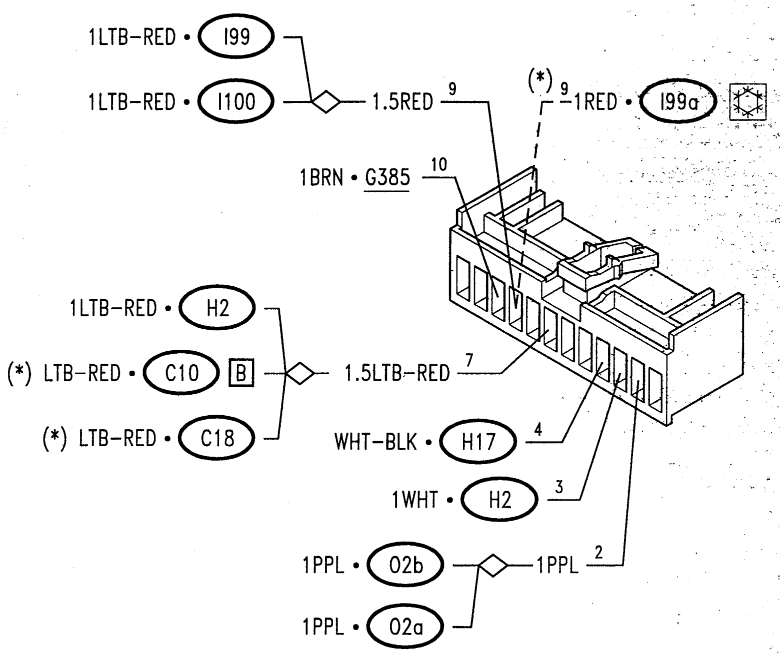

(*) only up to chassis no.___

CONNECTOR B

PIN	CIRCUITS
1	Horns control
2	N.C.
3	N.C.
4	N.C.
5	N.C.
6	N.C.
7	N.C.
8	Supply for power windows, radio, ALFA ROMEO CODE, airbag (key-operated)
9	Rearscreen heating/door mirror defrosting control
10	N.C.

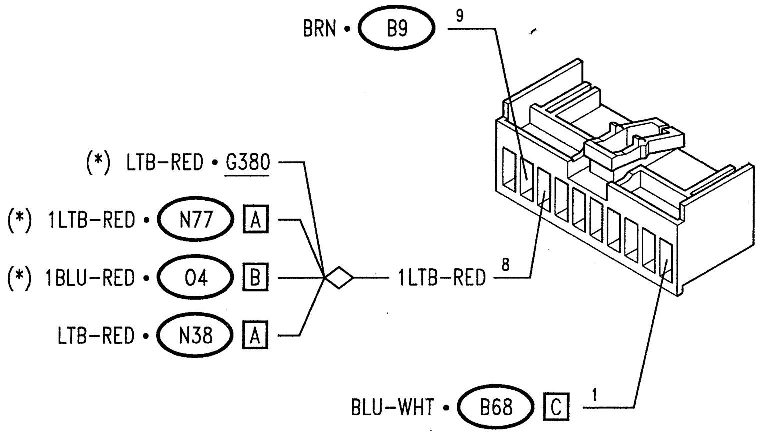

(*) only up to chassis no.___

CONNECTOR C

PIN	CIRCUITS	
1	Rear LH sidelights, controls lighting and front roof lamp	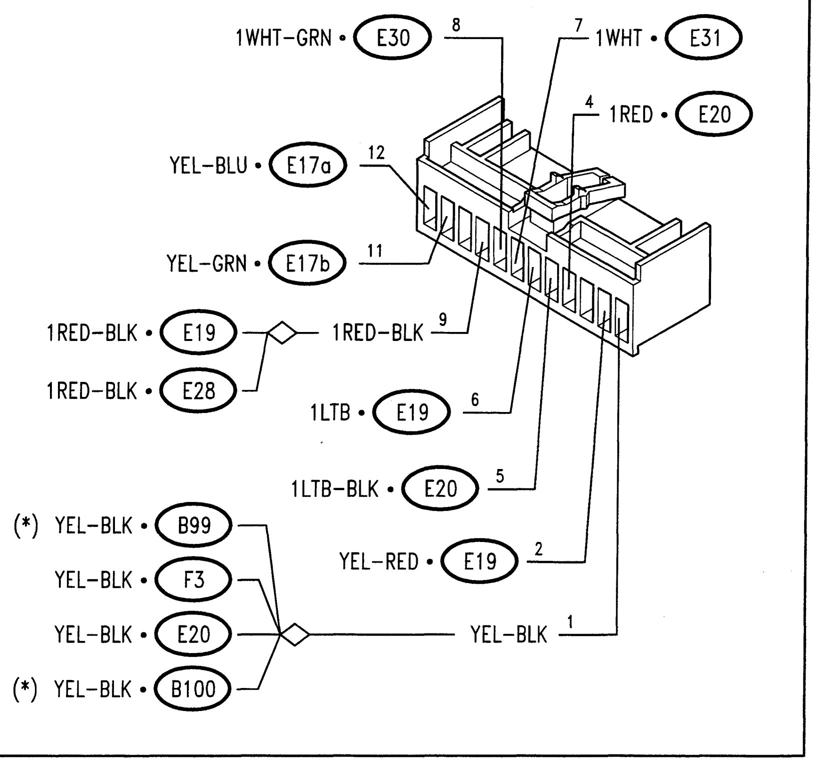
2	Rear RH sidelights	
3	N.C.	
4	LH brake lights	
5	LH rear sidelights	
6	RH rear sidelights	
7	LH reversing light	
8	RH reversing light	
9	RH brake light and 3rd stop light	
10	N.C.	
11	RH number plate light	
12	LH number plate light	

(*) only up to chassis no.____

CONNECTOR D

PIN	CIRCUITS	
1	N.C.	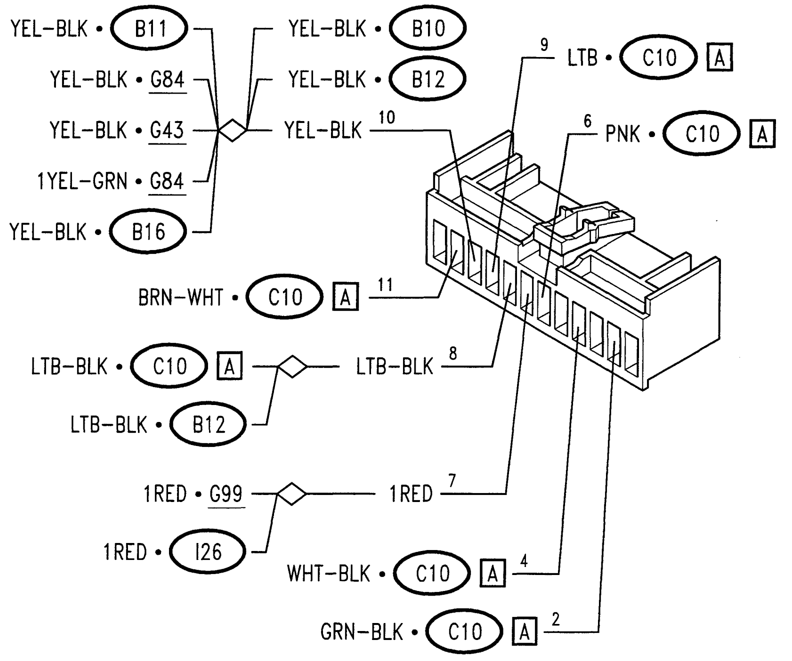
2	Headlamps warning light	
3	N.C.	
4	Handbrake warning light brake fluid level	
5	N.C.	
6	Fuel level gauge	
7	Supply for roof lamps, instrument panel, auxiliary panel (direct)	
8	LH direction indicator warning light, hazard warning lights control lighting	
9	RH direction indicator warning light	
10	Various controls lighting (with sidelights on)	
11	Heated rearscreen door mirror defrosting warning light	
12	N.C.	

CONNECTOR E

PIN	CIRCUITS
1	Handbrake switch
2	N.C.
3	Fuel level sender
4	Heated rearscreen (GTV only)
5	Supply for power windows, ABS, door lock remote control, foot well lights, steering column lever unit, hood release, automatic hood control unit and relays (SPIDER) (key-operated)
6	N.C.
7	N.C.
8	Supply for front roof lamp and boot light, electric aerial, door lock remote control (direct)
9	N.C.
10	N.C.
11	N.C.
12	N.C.

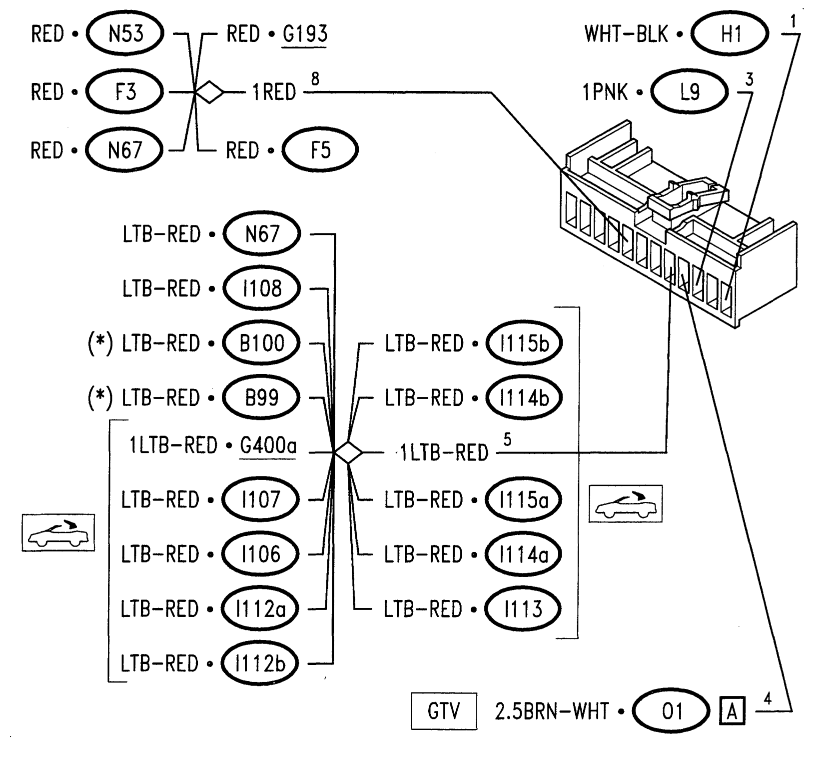

(*) from chassis no.___

CONNECTOR F

PIN	CIRCUITS
1	N.C.
2	RH direction indicator control
3	N.C.
4	N.C.
5	LH direction indicator control
6	Sidelights control
7	Low beam control
8	High beam control
9	N.C.
10	N.C.

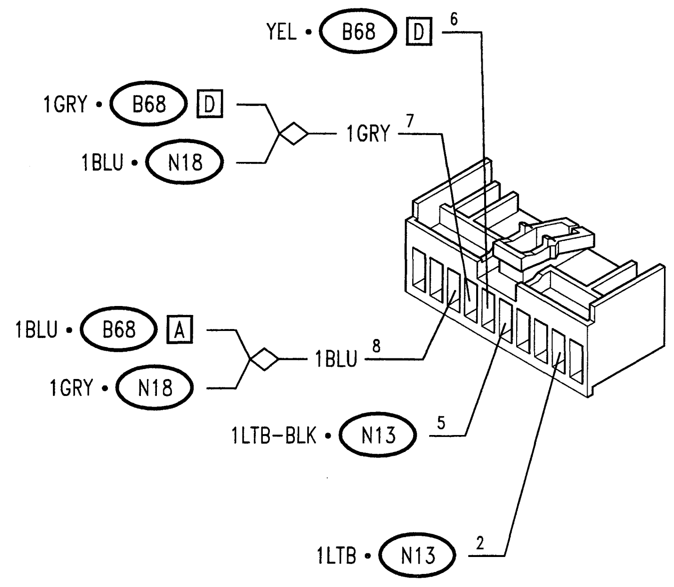

CONNECTOR G		
PIN	**CIRCUITS**	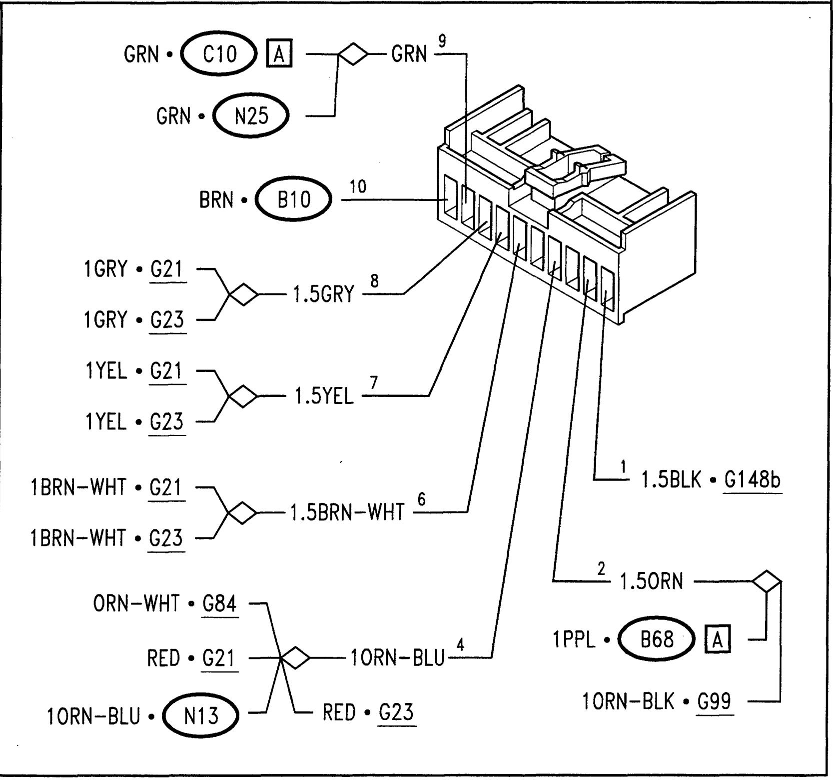
1	FUSEBOX EARTH	
2	Supply for side lights, alarm control unit (key-operated)	
3	N.C.	
4	Supply for hazard warning lights, timed roof lamps, mirror control (direct)	
5	N.C.	
6	Door mirror defrosting	
7	Door release control	
8	Door locking control	
9	Fog lamp warning light	
10	Fog lamp control	

CONNECTOR H		
PIN	**CIRCUITS**	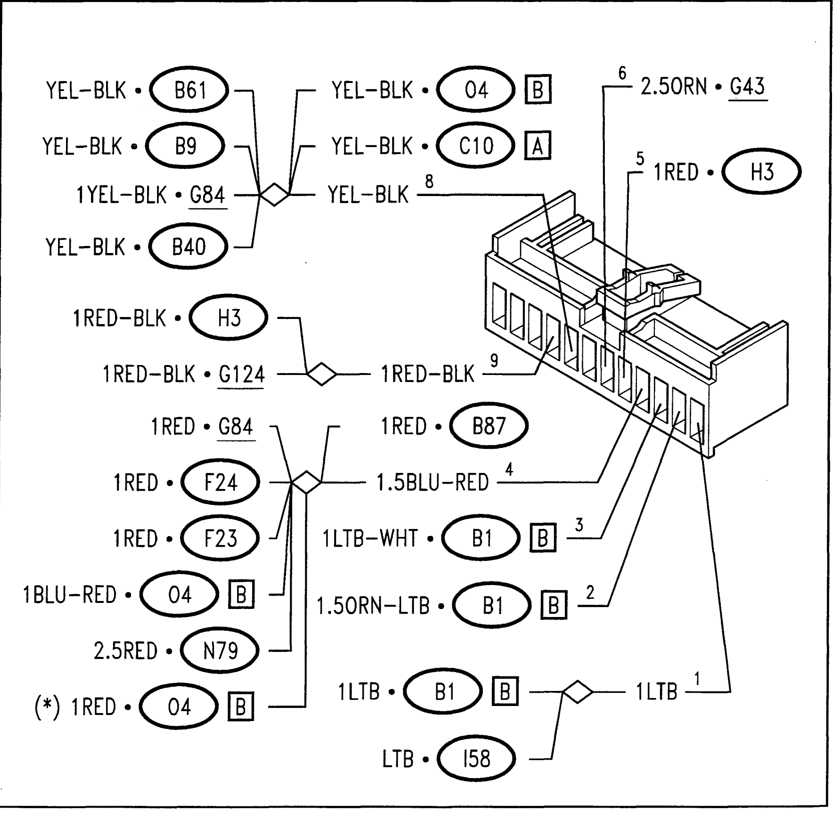
1	"KEY-OPERATED supply (cut-of when Starting)	
2	"KEY-OPERATED" supply	
3	"KEY-OPERATED" supply (Park)	
4	Supply for cigar lighter, radio, dashboard lights, boot opening switch (direct)	
5	Stop lights supply	
6	Supply for heater/conditioner fan (key-operated)	
7	N.C.	
8	Sidelights warning light, various controls lighting (with sidelights on)	
9	Brake lights control	
10	N.C.	
11	N.C.	
12	N.C.	

(*) from chassis no.___

CONNECTOR I

PIN	CIRCUITS	
1	Windscreen wiper supply	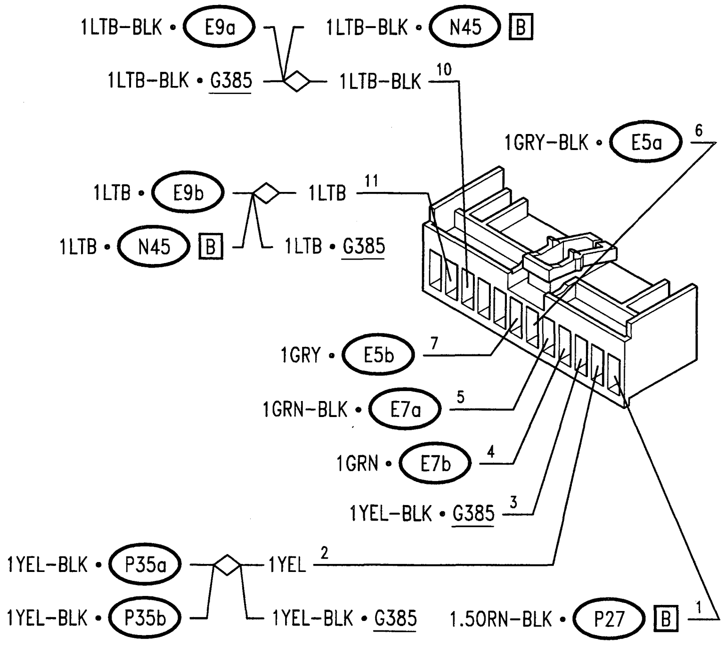
2	RH front sidelight, headlamp aiming device	
3	LH front sidelight	
4	RH high beam	
5	LH high beam	
6	LH low beam	
7	RH low beam	
8	N.C.	
9	N.C.	
10	LH front direction indicator	
11	RH front direction indicator	
12	N.C.	

CONNECTOR J

PIN	CIRCUITS	
1	Fog lamp relay consent	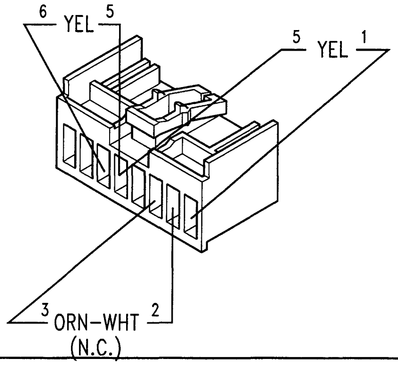
2	(*)	
3	(*)	
4	N.C.	
5	Side lights control	
6	Sidelights relay consent	
7	N.C.	
8	N.C.	
	(*) not used	

CONNECTOR K

PIN	CIRCUITS	
1	LH direction indicator	**Connector K**: (see "Trailer provision")
2	RH direction indicator	
3	LH sidelights	
4	N.C.	
5	RH sidelights	
6	Stop lights	

CONNECTOR L		
PIN	**CIRCUITS**	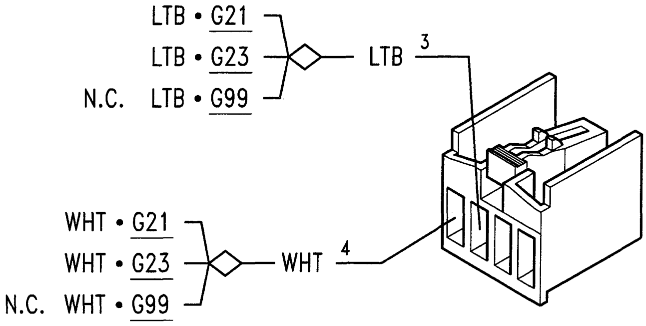
1	N.C.	
2	N.C.	
3	Door locking control	
4	Door release control	

CONNECTOR M		
PIN	**CIRCUITS**	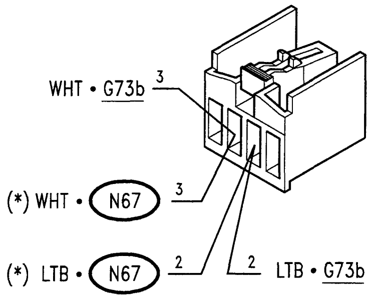
1	N.C.	
2	Door locking from remote control	
3	Door release from remote control	
4	N.C.	

(*) up to chassis no.___

CONNECTOR Q		
PIN	**CIRCUITS**	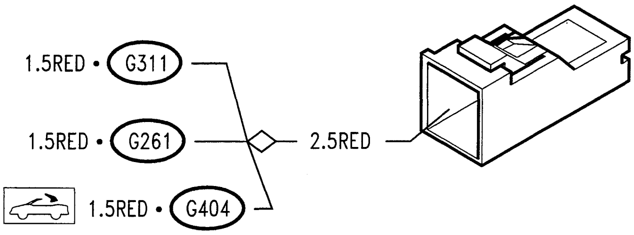
-	Supply, power windows and sunroof	
-	Supply for automatic hood control (SPIDER)	

LOCATION OF FUSES AND RELAYS

This section shows the locations in the car of all the fuses and switches that are not to be found in the fusebox.

The fuses and relays are distinguished by the colour of the base (fuse holder or relay carrier) which connects them to the wiring harness, as described later.
In addition to the colour of the base, it is always wise to check the exact location of a relay or fuse by the colour of the wires that converge on it (for these - see the wiring diagram concerned).

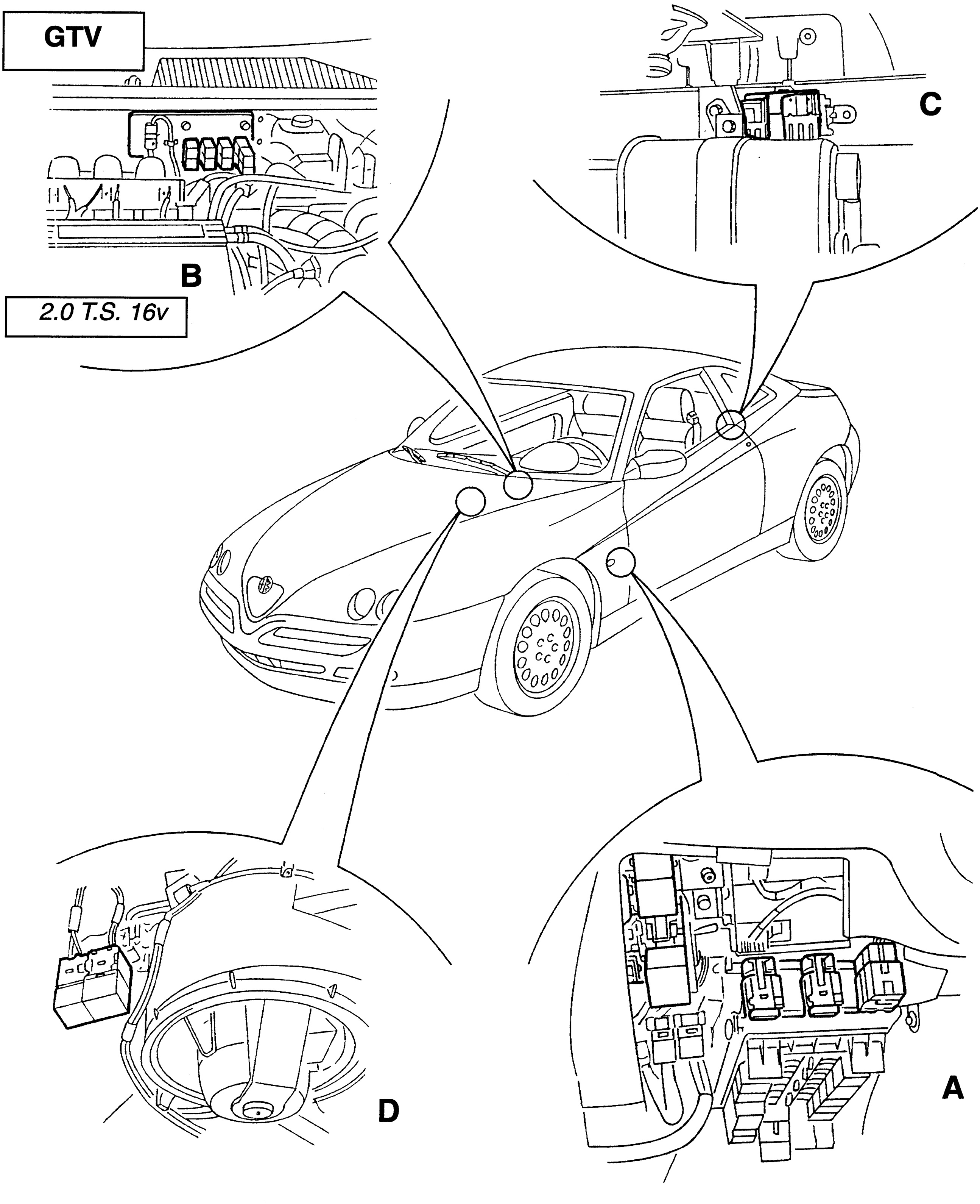

Spider

3.0 V6

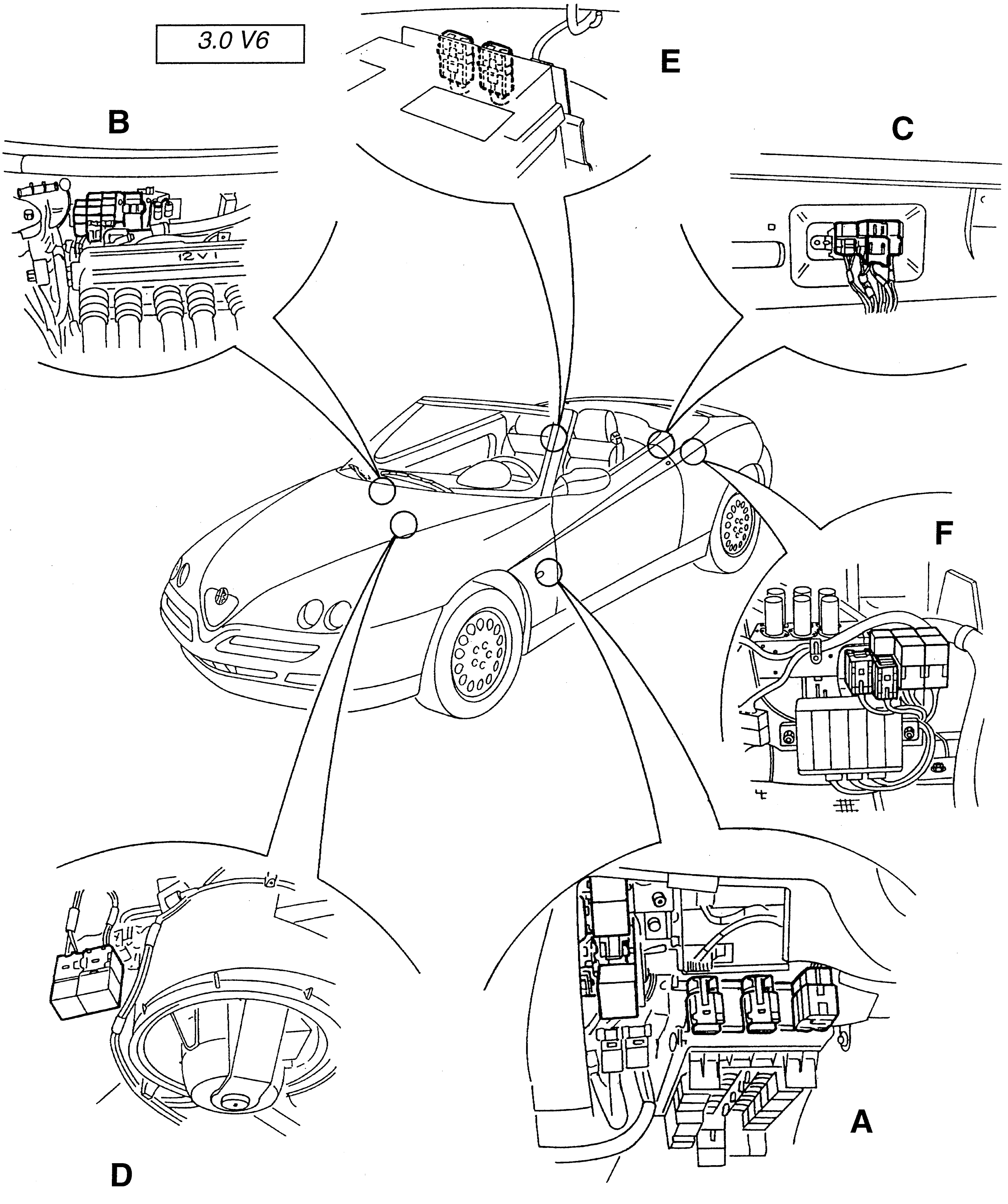

FUSES AND RELAYS ON AUXILIARY BRACKET (see fig. position A)

A set of fuses and relays is positioned on an auxiliary bracket (not removable) on the left-hand side of the main fusebox; next to this there is also the power window control unit **N38**, the electronic key control unit **N77** and the electronic windscreen wiper device **N14.**

COMPONENT	AMP.	SYMBOL	COLOUR OF BASE
Ceiling light relay	20A	**I26**	Green
Hazard warning light & direction indicator intermittent device	-	**N13**	Black
Rear fog guard device	-	**N25**	White
Engine cooling fan 2nd speed relay	50A	**I100**	Yellow
Engine cooling fan 1st speed relay	30A	**I99/I99a**	Yellow
Sunroof relay (*)	30A	**I58 (*)**	Red (*)
Automatic hood control relay (***)	30A	**I116 (***)**	Green (***)
ABS fuse	10A	**G125a**	Black
Power window fuse	25A	**G311**	White
RH power window fuse	25A	**G310**	White
Sunroof fuse (*)	30A	**G261 (*)**	Green
Fuse for automatic hood switch (***)	30A	**G404 (***)**	Green
Climate control fan fuse	30A	**G255**	Green
Rear fog guard fuse	7.5A	**G391**	Brown
ALFA ROMEO CODE control unit fuse (•)	10A	**G389**	Red

(*) GTV only (***) Spider with automatic hood
(•) from chassis no.___

FUSES AND RELAYS IN ENGINE COMPARTMENT (see fig. position B)

A set of fuses and relays is located in the engine compartment on the services container wall.

COMPONENT	AMP.	SYMBOL	COLOUR OF BASE
Antitheft switch relay	20A	**I109**	Red
Engine fan fuse	50A	**G254**	Black
Air conditioner wander fuse	30A	**Q39**	Green (Black (•))
3.0 V6 Engine			
Main relay	30A	**S41**	Grey
Secondary relay	30A	**S42**	Black
Fuel pump relay	30A	**S12a**	Black
Air flow meter relay	30A	**S12e**	Black
Motronic supply fuse	7.5A	**S46**	Brown
Fuel pump fuse	10A	**S47**	Red
2.0 16v T.S. Engine			
Air conditioner wander fuse (•)	15A	**Q40**	Blue
Main relay	30A	**S41**	Black
Secondary relay (*)	30A	**S42**	Black
Fuel pump relay	30A	**S12a**	Black
Phase variator relay	30A	**S12c**	Black
Motronic supply fuse	(7.5A*) 15A	**S46**	Black
Fuel pump fuse (*)	10A	**S47**	Red
λ probe fuse (*)	7.5A	**S45**	Brown
Electromagnetic coupling relay (**)	20A	**Q22**	Grey
Auxiliary relay for heating and ventilation (**)	20A	**Q32**	Grey

(•) only for certain cars
(*) only for MOTRONIC M2.10.3
(**) from chassis no. 6023906

FUSES AND RELAYS ON REAR BRACKET (see fig. position C)

A set of fuses and relays is located in the luggage compartment on a special bracket.

COMPONENT	AMP.	SYMBOL	COLOUR OF BASE
Hood release relay (*)	20A	**I106**	Black
Hood cover release relay (*)	20A	**I107a**	Red
Hood cover release relay (*)	20A	**I107b**	Black
Luggage compartment opening relay	20A	**I52**	Green
Fuel flap opening relay	20A	**I53**	White
key-operated supply cut-off relay	20A	**I108**	Blue
Hood cover release timer (*)	27A	**N80**	Black
Services supply fuse	40A	**G384**	Black
ABS supply wander fuse (**)	60A	**G125b**	Black
Injection wander fuse (**)	40A	**S36**	Black
Hood release relay (***)	20 A	**I106**	Red
Hood cover release relay (***)	20 A	**I107**	Brown
RH hood closing relay (***)	20 A	**I112a**	Red
LH hood closing relay (***)	20 A	**I112b**	Red
Hood cover closing relay (***)	20 A	**I113**	Brown

(*) Spider only
(**) GTV only
(***) Spider with automatic hood

RELAYS ON HEATER/AIR DISTRIBUTOR UNIT (only versions with air conditioner) (see fig. position D)

COMPONENT	AMP.	SYMBOL	COLOUR OF BASE
Climate control solenoid valve relay	30A	**Q15**	Yellow
Climate control solenoid valve 1st speed relay	30A	**Q69**	Brown

FUSES ON BRACKET IN REAR TRAY (Spider only) (see fig. position E)

In the Spider two wander fuses are to be found near the battery, in the rear tray.

COMPONENT	AMP.	SYMBOL	COLOUR OF BASE
ABS supply wander fuse	60A	**G125b**	Black
Injection wander fuse	40A	**S36**	Black
Automatic hood system fuse (***)	40 A	**G401**	Black
Hood relays supply fuse (***)	40 A	**G403**	Black

(***) Spider with automatic hood

SPIDER with automatic hood

A set of relays and fuses are located on a special bracket in the passenger compartment boot next to the hood control unit: **(see fig. position F)**.

COMPONENT	AMP.	SYMBOL	COLOUR OF BASE
Hood control unit fuse	7.5 A	**G402**	Brown
Automatic hood window openng fuse	25 A	**G405**	White
Automatic hood window closing fuse	25 A	**G406**	White
LH power window opening relay	20 A	**I114a**	Grey
RH power window opening relay	20 A	**I114b**	Grey
LH power window closing relay	20 A	**I115a**	Grey
RH power window closing relay	20 A	**I115b**	Grey
Automatic hood emergency opening relay	20 A	**I106b**	Grey
Automatic hood electric pump relay	50 A	**I117**	Black

STARTING AND CHARGING

INDEX

WIRING DIAGRAM

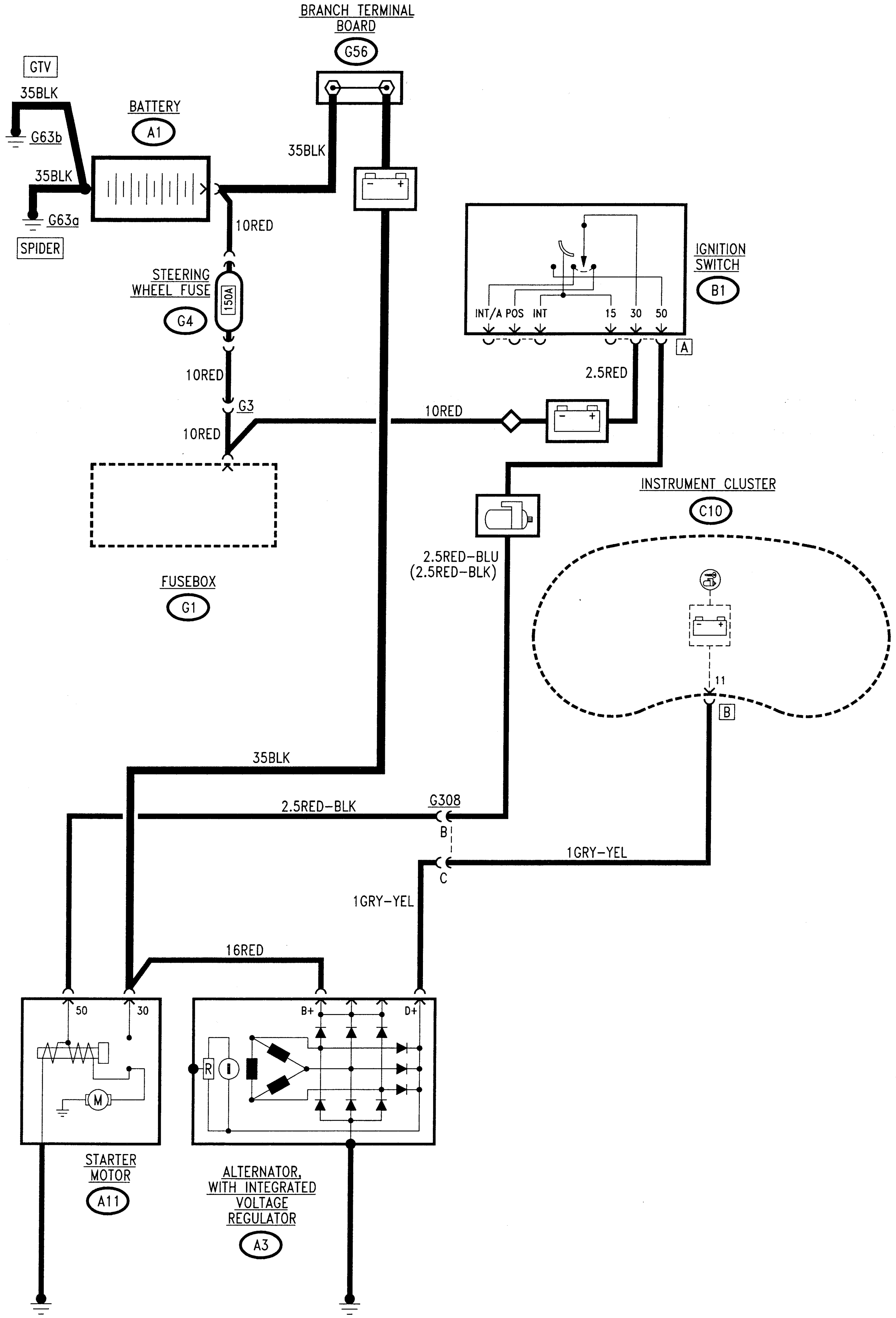

GENERAL DESCRIPTION

The starting and charging circuit comprises the battery, starter motor and the alternator.

The **battery** (12V) is sealed and maintenance-free.

The **starter motor** comprises a direct current motor supplied by the battery and a control and engagement solenoid.

By turning the ignition key, the voltage leading from the battery supplies the windings of the motor, generating the electromagnetic forces which turn the pinion of the motor itself: simultaneously, the solenoid is energized which operates the mechanism engaging the pinion in the flywheel ring gear, thereby setting the crankshaft into rotation.

The **alternator** recharges the battery during the normal rotation of the engine: the alternator shaft (rotor) turned directly by the crankshaft through a belt is supplied with the excitation current and generates a magnetic field which induces an alternate current on the fixed winding (stator); this is transformed into direct current by a rectifier bridge with diodes and sent to recharge the battery.

A voltage regulator built into the alternator makes it possible to maintain a constant voltage supply (appr. 12 V) for all the fields of load changes and engine speed.

FUNCTIONAL DESCRIPTION

When the ignition key is turned in the ignition switch **B1** right round to the "STARTING" position, the windings of the solenoid (pin 50) of the starter motor **A11** are energized and the actual motor is supplied (pin 30) with the voltage leading from the battery **A1** in this way cranking the engine.

When the engine is running, the direct current generated by the alternator **A3** (pin B+) is sent via the starter motor **A11** and the terminal block **G56,** to recharge the battery **A1**.

All the lines for supplying the various electric systems of the car branch from the terminal board **G56** and from the + post of the battery **A1** (see "Power Supply").

When the alternator is not turning and therefore not charging the battery, an earth signal is sent from pin D+ to the instrument cluster **C10** to turn on the corresponding warning light; once the engine has started this signal becomes 12 V and the warning light goes off.

LOCATION OF COMPONENTS

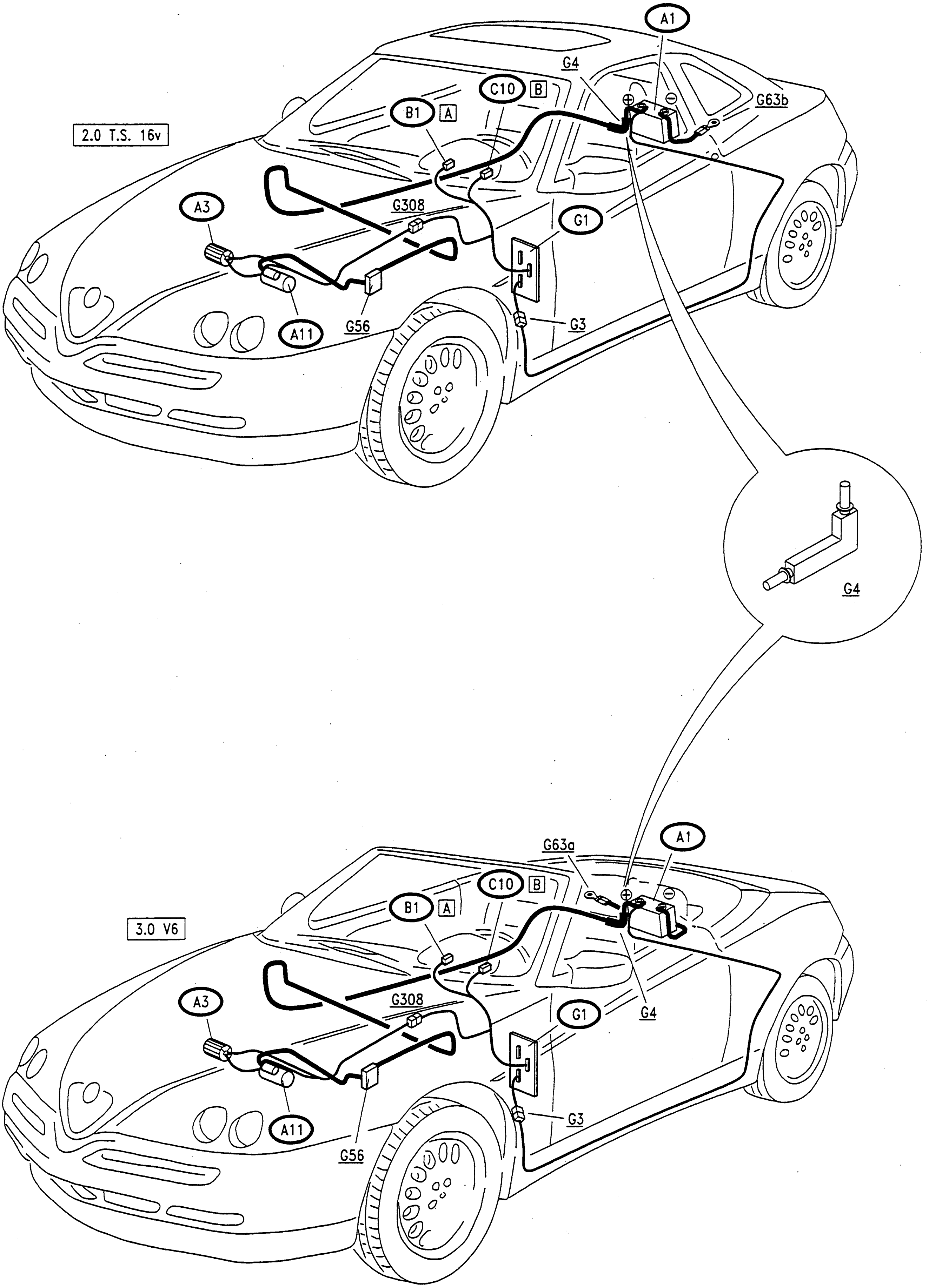

FAULT-FINDING TABLE

Fault	Component to be checked					
	A1	B1	A11	A3	G56	C10 (1)
Engine starting	•	•	•		•	
Engine recharging	•			•	•	
Charging warning light				•		•

(1) The instrument cluster **C10** cannot be overhauled. Therefore in the event of a failure individual warning lights cannot be replaced and a new complete cluster must be fitted.

CHECKING COMPONENTS

Ignition switch (B1)

Check the internal connections as shown below:

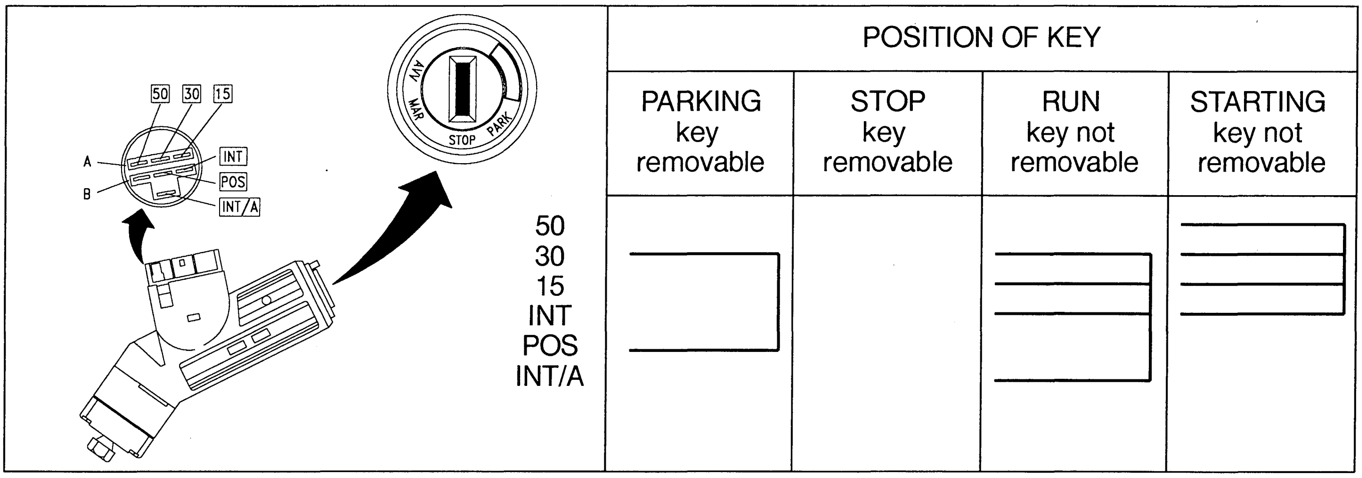

	POSITION OF KEY			
	PARKING key removable	STOP key removable	RUN key not removable	STARTING key not removable
50				●
30	●		●	●
15			●	●
INT			●	●
POS	●			
INT/A			●	

Starter motor (A11)

If necessary, see the specifications and overhauling of the motor in the section "ELECTRIC SYSTEM-ENGINE STARTING"

Alternator (A3)

If necessary, see the specifications and overhauling of the alternator in the section "ELECTRIC SYSTEM-CURRENT GENERATION SYSTEM"

Battery (A1)

If necessary, see the battery specifications in the section "ELECTRIC SYSTEM-CURRENT GENERATION SYSTEM"

SIDE LIGHTS

INDEX

WIRING DIAGRAM

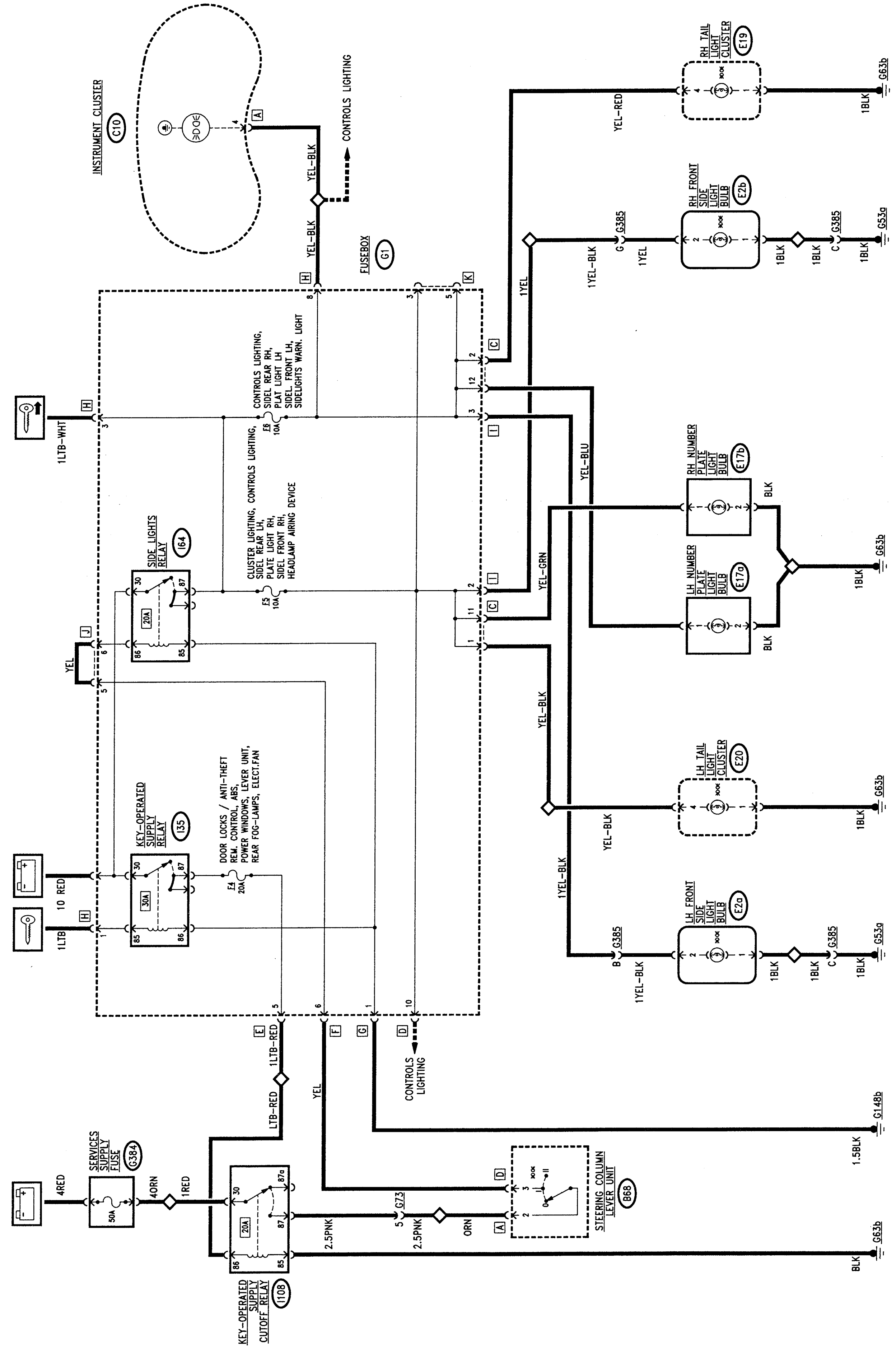

GENERAL DESCRIPTION

The side lights are turned on when the switch on the lever unit is turned to the first position and only when the ignition key is engaged: this prevents the battery from discharging if the lights are inadvertently left on when leaving the car.

N.B.: They can also be turned on by withdrawing the ignition key and turning it in the opposite direction holding down the special button: key in the "PARKING" position (see also "Power supply").

When the side lights are turned on, the number plate lights and numerous interior lights for lighting the passenger compartment, instruments and controls are also turned on with "consent" signals (eg. circuits which operate only with the sidelights on): for these functions see the wiring diagrams of the componnets concerned: eg. instrument cluster lighting: see "Instrument Cluster".

A warning light on the instrument panel indicates that the side lights are on.

For safety reasons the circuit is protected by two "crossed" fuses: one for the right front and left rear lights etc., the other for the left front and right rear lights, etc..

FUNCTIONAL DESCRIPTION

The side lights circuit is activated by the corresponding relay switch **I64** located in fusebox **G1**.

Moving the switch on the lever unit **B68** to position "I" when the ignition key is engaged the coil of relay switch **I64** is supplied thereby closing the circuit that supplies the side lights; this circuit is protected by two fuses in fusebox **G1: F5** for the right front and left rear lights, **F6** for the left front and right rear lights. In this way the front side lights **E2b** (right) and **E2a** (left), the rear lights **E19** (right) and **E20** (left) and the number plate lights **E17a** and **E17b** are supplied.

The line supplying fuse **F6** also sends a signal to the instrument cluster **C10** to turn on the corresponding warning light.

When the ignition key is at the "PARKING" position all the side lights are turned on as a direct supply is sent to fuses **F5** and **F6** in fusebox **G1**, "by-passing" relay switch **I64.**

FAULTFINDING TABLE

Failure	Component to be checked										
	F5	F6	E2b	E2a	E19	E20	E17a	E17b	I64	B68	C10 (1)
All the side lights									•	•	
Front right	•		•								
Front left		•		•							
Right rear		•			•						
Left rear	•					•					
Right number plate	•							•			
Left number plate		•					•				
Side lights warning light	•										•

(1) The instrument cluster **C10** cannot be repaired. Therefore, in the event of a failure it is not possible to change the single warning light and a new complete cluster must be fitted.

LOCATION OF COMPONENTS

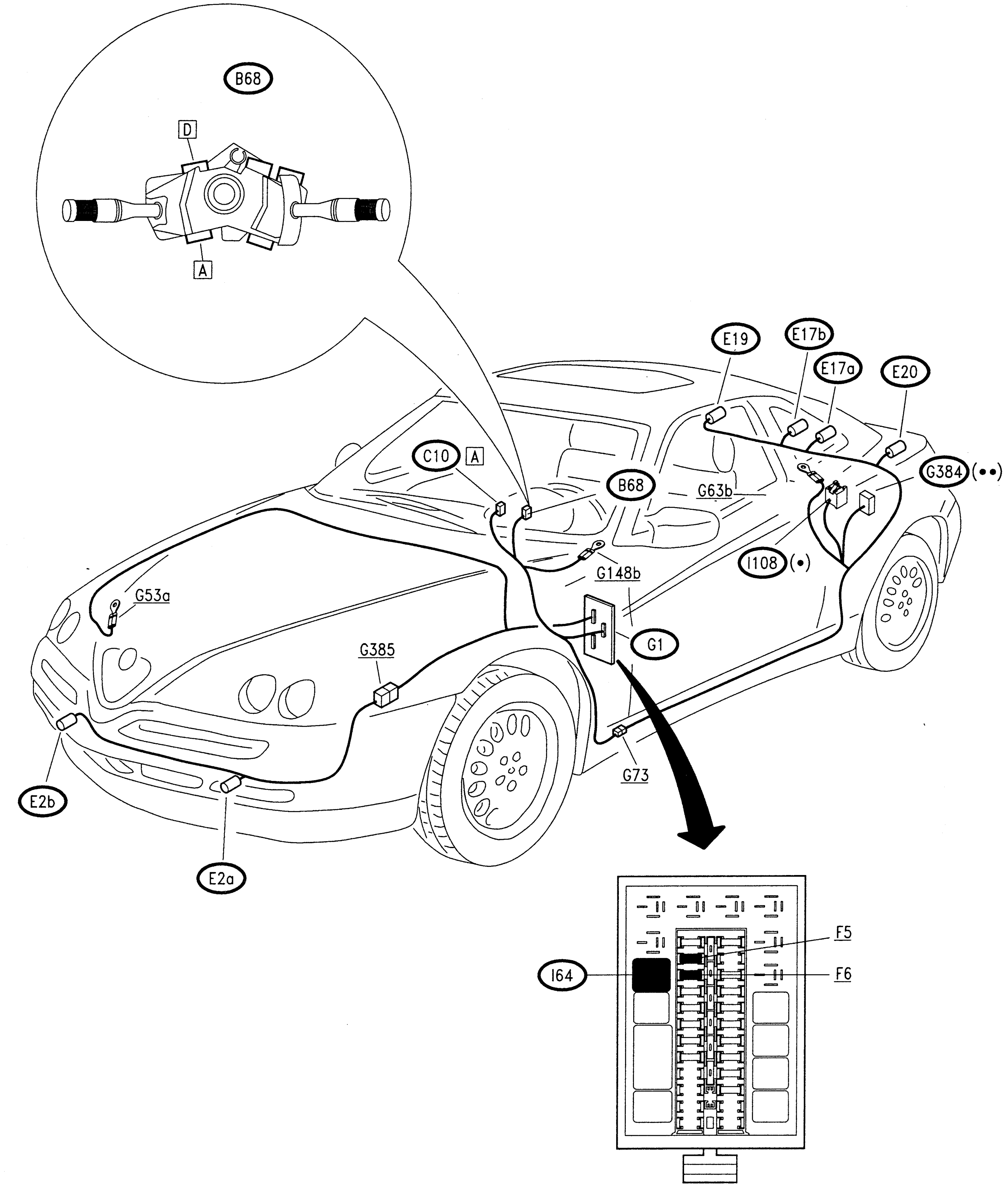

(•) Blue Base
(••) Black fuseholder

HIGH AND LOW BEAM HEADLAMPS

INDEX

WIRING DIAGRAM

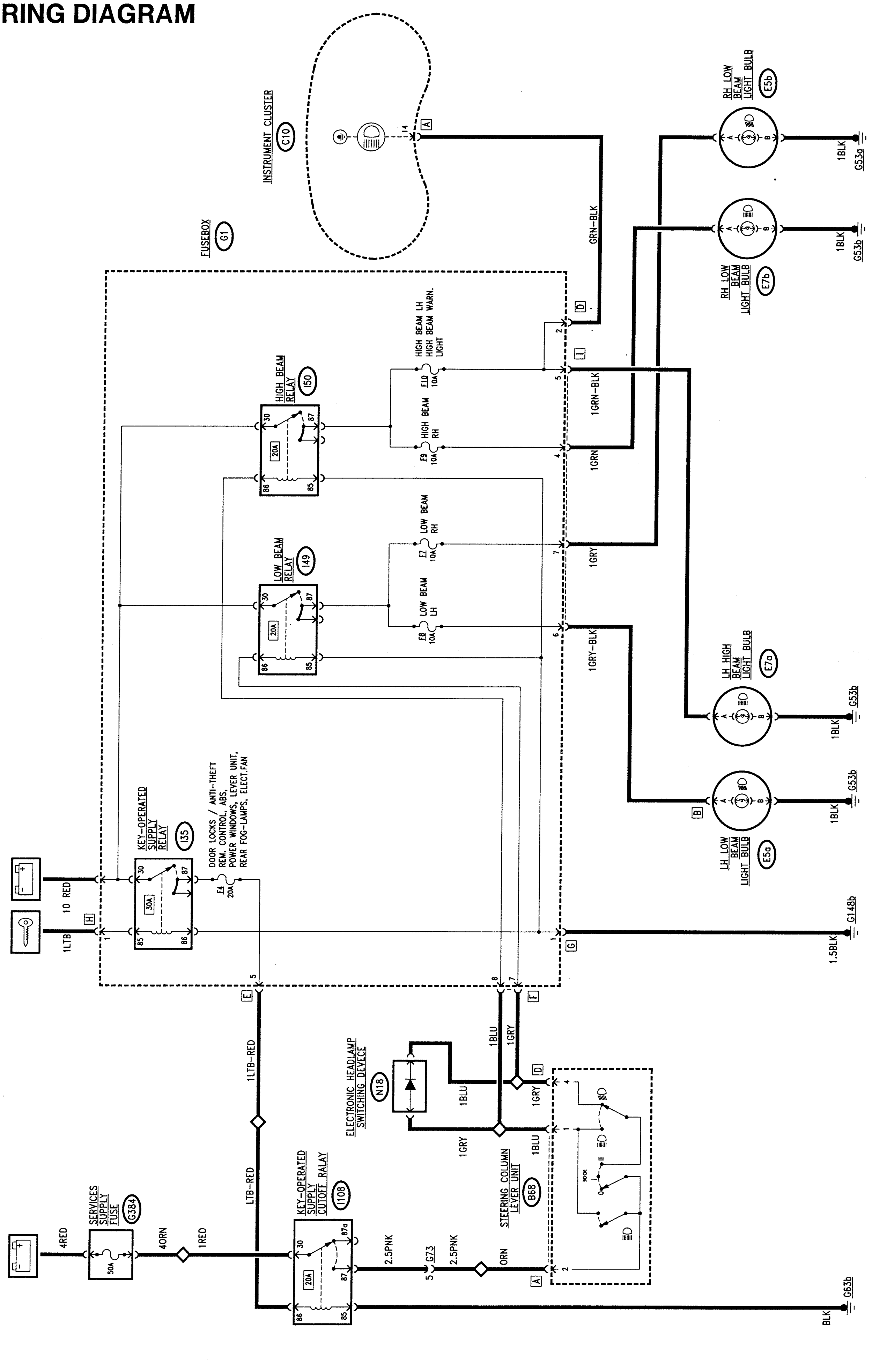

GENERAL DESCRIPTION

The car is fitted with two separate lamps for the low beams and two for the high beams.

The low beams are turned on by the switch on the steering column lever unit one position on from the sidelights; from this position the high beam can be permanently selected operating the high/low beam switch; lightly pulling the lever towards the steering wheel activates the high beam "flashing" function for as long as the lever is pulled.

A warning light on the dashboard indicates when the high beams are on.

For safety reasons each single high and low beam lamp is protected by a fuse.

NOTE: some versions are equipped with an electrically- operated headlamp aiming device (see "Headlamp aiming device"); however a manual device enables quick and simple adjustment of the beam to the loading conditions of the vehicle.

FUNCTIONAL DESCRIPTION

The circuit of the low beam headlamps is operated by relay switch **I49** located in fusebox **G1**.
Moving the lever unit switch **B68** to position II ⩶D and with the switch in the low beam position the coil of relay switch **I49** is "turn key" supplied thereby closing the circuit supplying the left headlamp **E5a** and the right headlamp **E5b**.
Each circuit is protected by a fuse in fusebox **G1: F7** for the right headlamp and **F8** for the left one.
The high beam circuit is operated by relay switch **I50** located in fuse box **G1**.
Moving the switch to the high beam position ≣D with the lever unit switch **B68** on position II, or closing the "flashing" contact, the coil of relay switch **I50** is "turn key" supplied thereby closing the circuit that supplies the left headlamp **E7a** and the right one **E7b**. Each circuit is protected by a fuse in fusebox **G1**: **F9** for the right headlamp and **F10** for the left one.

The left high beam headlamp supply line also sends a signal to the instrument panel **C10** to turn on the high beam on warning light.

As the arrangement of the internal contacts of the steering column lever switch **B68** does not maintain the supply to the low beam lights when the high beams are switched on a suitable diode **N18** has been added which supplies the low beam lamps when the high beam lamps are on.

FAULTFINDING TABLE

Failure	Component to be checked												
	F7	F8	F9	F10	E5b	E5a	E7b	E7s	I49	I50	B68	C10 (1)	N18
Both low beam lamps									•		•		
RH low beam lamp	•				•								
LH low beam lamp		•				•							
Both high beam lamps										•	•		
RH high beam lamp			•				•						
LH high beam lamp				•				•					
High beam warning light				•								•	
Low beam lamps turn off when high beams are turned on													•

(1) WARNING:
The high beam warning light of the instrument cluster **C10**, shown by the arrow, can be replaced

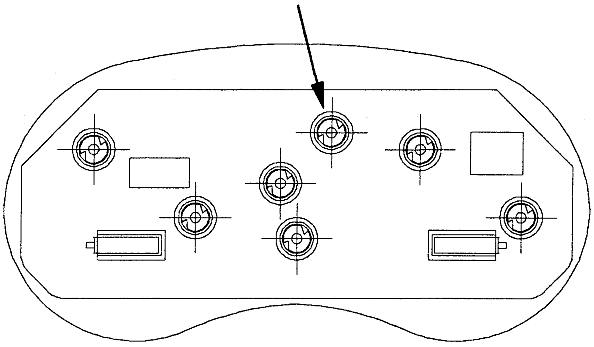

LOCATION OF COMPONENTS

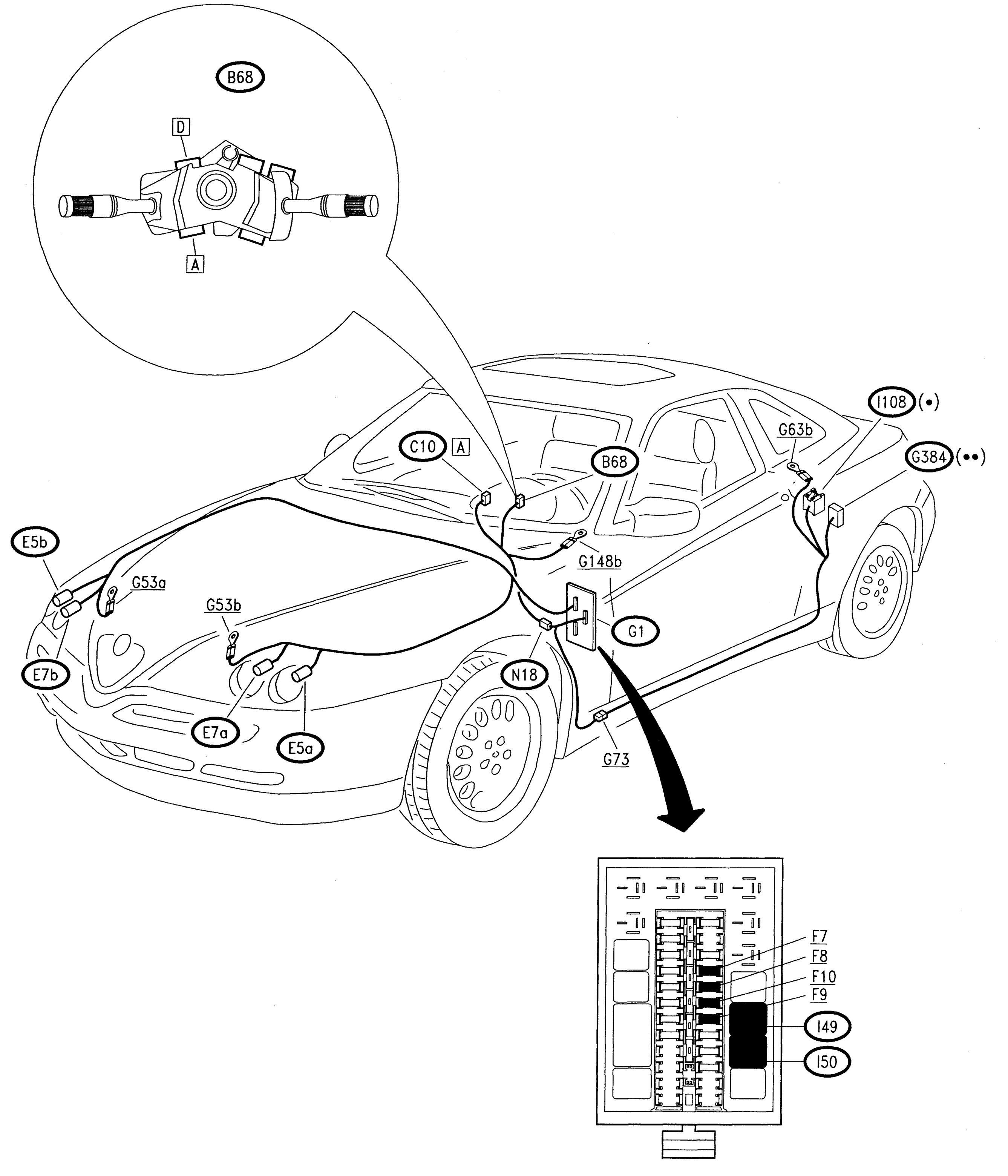

(•) Blue Base
(••) Black Fuseholder

FOG LIGHTS AND REAR FOG GUARDS

INDEX

WIRING DIAGRAM

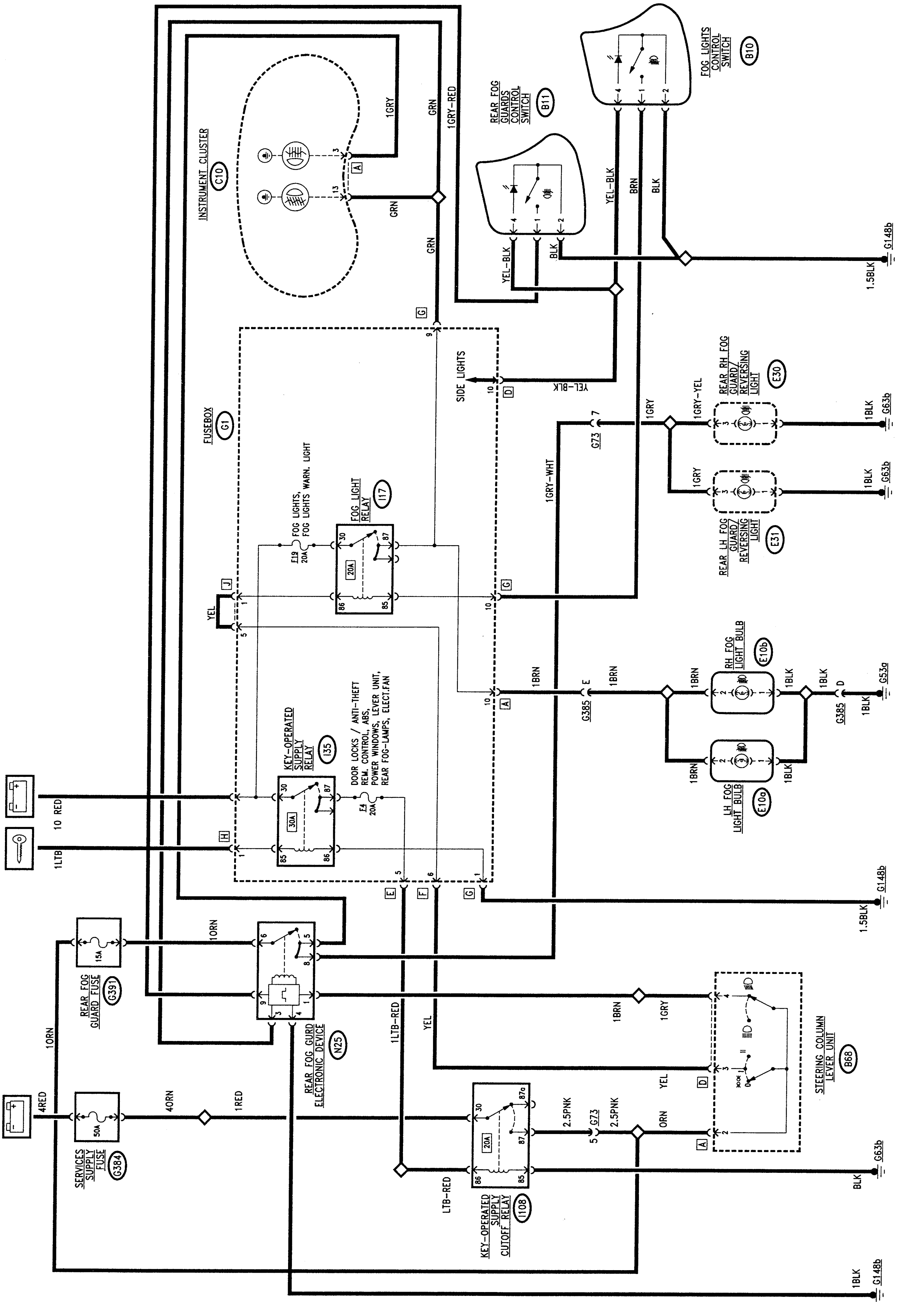

GENERAL DESCRIPTION

Upon request the car is fitted with special halogen fog lights, while the high luminosity rear fog guard, needed in all cases of poor visibility, is a standard item. Thus the entire system ensures the best possible active and passive visibility under all circumstances.

The fog lights and rear fog guards are turned on by the switches on the left-hand side of the instrument cluster.

The fog lights can be turned on when the side lights are on, while the rear fog guard can be turned on only with the low beam headlights or fog lights on (N.B. they turn off when the ignition key is moved to STOP and must be turned on again afterwards).
A warning light on the instrument panel indicates that the fog lights are on and another one indicates that the rear fog guards are turned on.
Each of the two circuits is protected by a fuse.

FUNCTIONAL DESCRIPTION

Fog lights

The circuit for the fog lights is controlled by the corresponding relay switch **I17** located in fuse box **G1**.
By operating the switch **B10** , with the side lights on (lever unit switch **B68** in posizion "I") an earth and supply are sent which energize the coil of relay switch **I17** thereby closing the circuit which sends the supply to the two fog lights **E10a** and **E10b**.

The switch in **B10** is lit by a led when the side lights are on.
The fog lights circuit is protected by fuse **F19** of box **G1**.
The supply line also sends a signal to the instrument cluster **C10** to turn on the corresponding warning light.

Rear fog guard

The circuit of the rear fog guards is controlled by the corresponding electronic device **N25** located near fusebox **G1**.

Device **N25** receives the supply from the "key-operated" line of wander fuse **G391** at pin 6; pin 4 is earthed, while pins 9, 3 and 1 receive the control and consensus signals, which are respectively: request to turn on the lamps (from switch **B11** ( ); fog lamps on (same signal as for the fog lamp warning light) and low beam lights on (from lever switch **B68**): when the request for turning on is accompanied by one of the two consensus signals, device **N25** closes the circuit on pin 8 which powers the rear fog guards located in the tail lights **E30** (RH) and **E31** (LH).

N.B. The device turns off the lights if it "loses" the "key-operated" signal: when the key is turned to RUN again, the rear fog guards are only turned on by pressing switch **B11**.

The supply line also sends a signal - from pin 5 of **N25** - to the instrument panel **C10** to turn on the corresponding warning light.

Switch **B11** is illuminated by a led when the sidelights are on.

LOCATION OF COMPONENTS

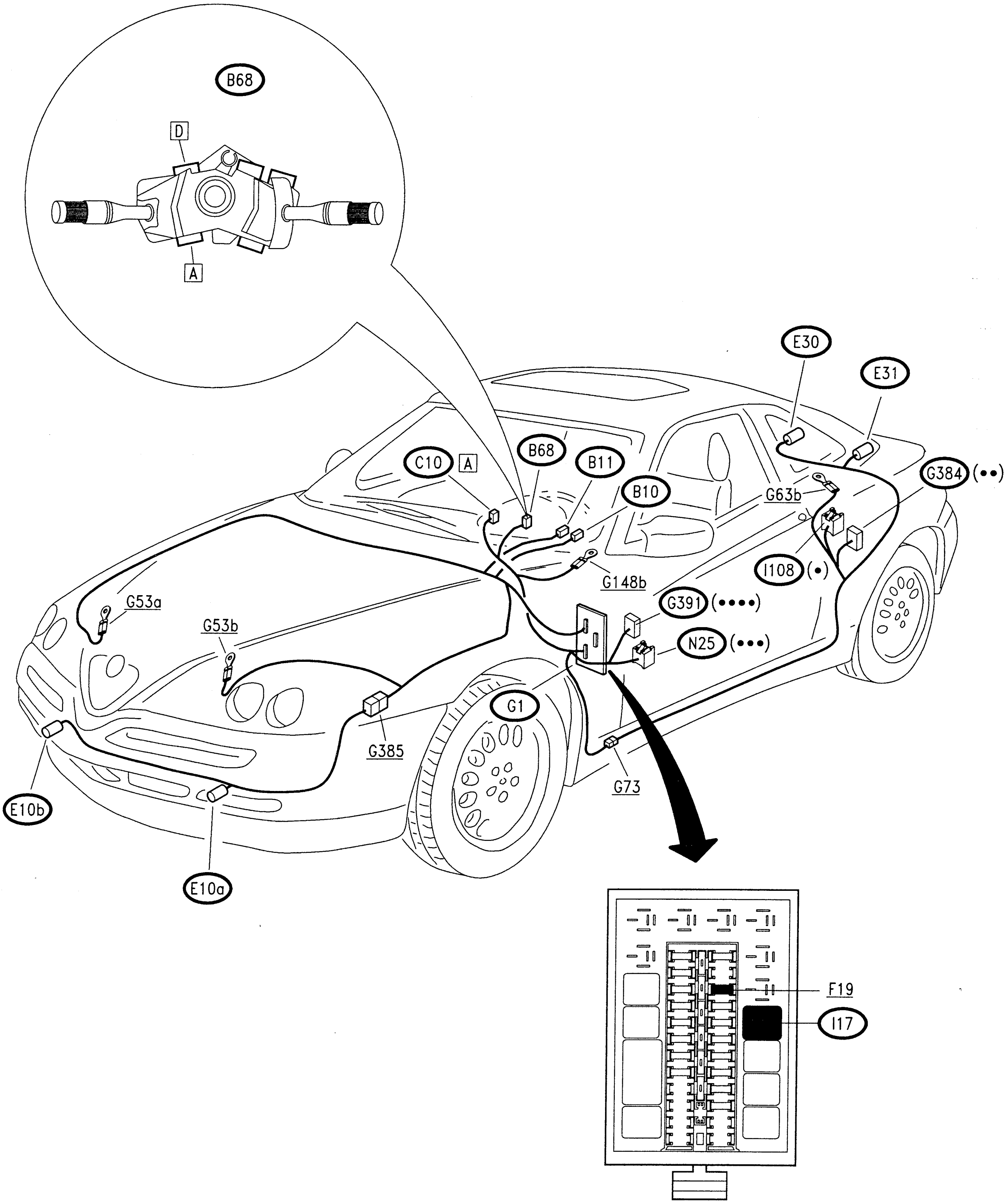

(•)	Blue base
(••)	Black fuseholder
(•••)	White base
(••••)	Brown fuseholder

FAULTFINDING TABLE

Failure	Component to be checked											
	G391	E30	E31	F19	E10a	E10b	I17	N25	B68	B11	B10	C10 (1)
Both rear fog guards	•							•	•	•		
RH fog light		•										
LH fog light			•									
Rear fog guards warning light								•				•
Both rear fog guards				•			•		•		•	
RH fog ligh						•						
LH fog light					•							
Fog lights warning light				•								•
Lighting fog light switch (with side lights on)											•	
Rear fog guard switch lighting (with sidelights on)										•		

(1) The instrument cluster **C10** cannot be overhauled. Therefore, in the event of a failure it is not possible to change the single warning light and a new complete cluster must be fitted.

CHECKING COMPONENTS

Rear fog guard electronic device N25

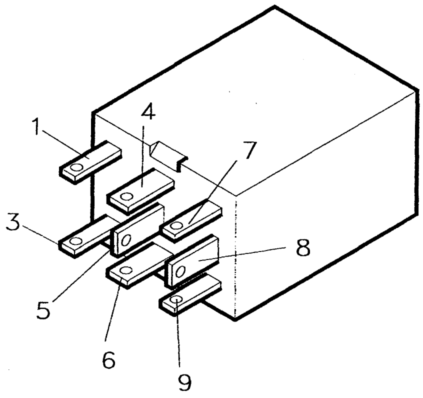

Check device: see **TEST A**

CHECK REAR FOG GUARD DEVICE (N25)

TEST A

TEST PROCEDURE		RESULT	CORRECTIVE ACTION
A1	CHECK VOLTAGE – Disconnect device **N25** and on the base check for "key- operated" 12V at pin 6 of **N25**	OK ▶ ~~OK~~ ▶	Carry out **step A2** Check fuse **G391**. If necessary replace connection between N25 and relay **I108**
A2	CHECK EARTH – Check for 0V at pin 4 of **N25**	OK ▶ ~~OK~~ ▶	Carry out **step A3** Restore the wiring between **N25** and earth **G148b**
A3	CHECK CONSENSUS/CONTROL SIGNALS – Check for the following signals on the pins of **N25**: • 0V at pin 9, engaging switch **B11**, • 12V at pin 3, engaging the fog lamps, • 12V at pin 1, engaging the low beams	OK ▶ ~~OK~~ ▶	Insert device **N25** on its base and continue with **step A4** Check the connection between **N25** and **B11**, connector G of **G1** and lever unit **B68**
A4	CHECK VOLTAGE – Switch on the rear fog lights with the low beams on or with the fog lights on, and check for 12V at pins 8 and 5 of **N25**	OK ▶ ~~OK~~ ▶	DEVICE **N25** IS WORKING PROPERLY. Check the connections with the other components CHANGE DEVICE **N25**

COURTESY LIGHTS AND TIMED LIGHTS

INDEX

WIRING DIAGRAM

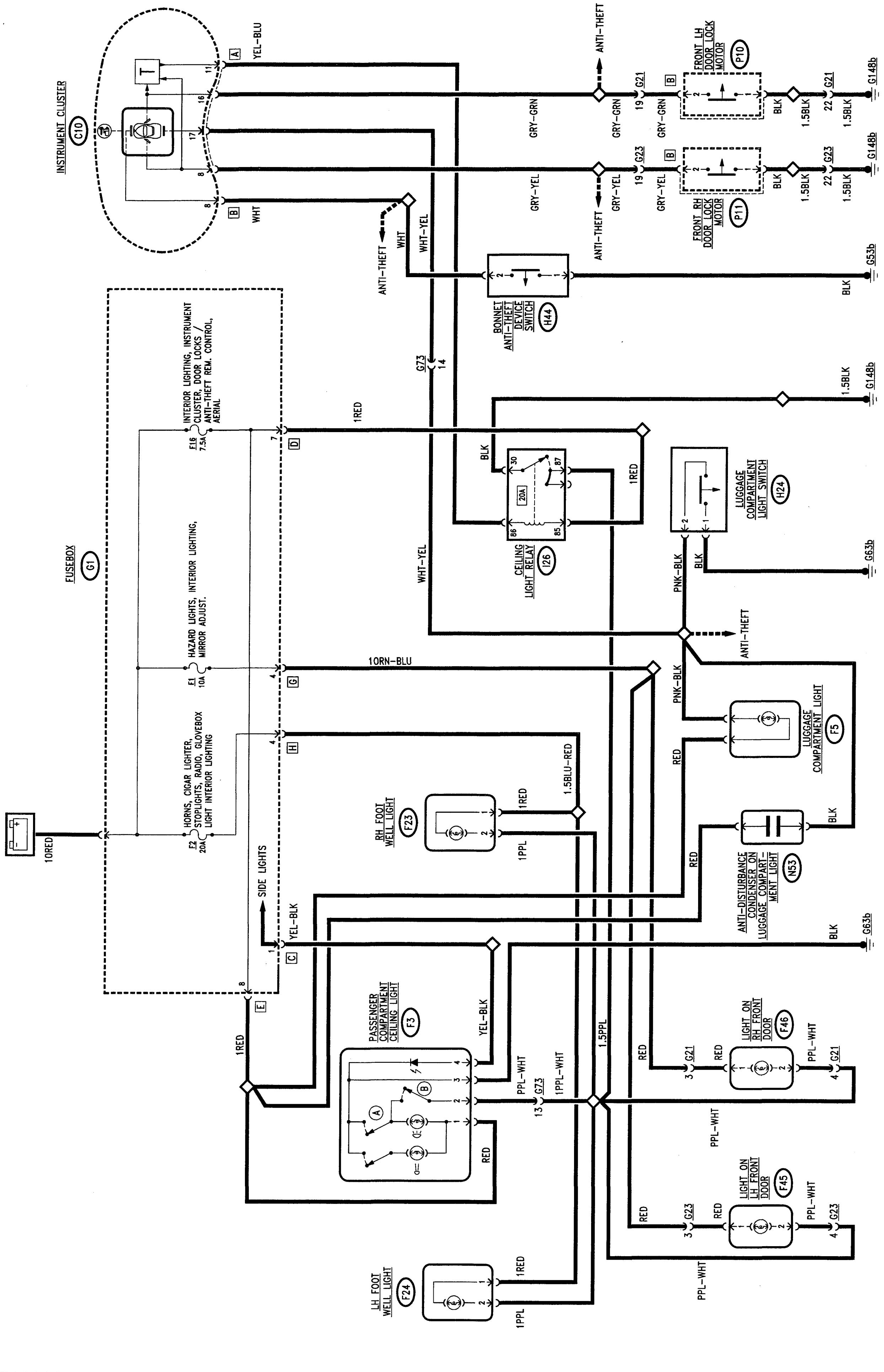

GENERAL DESCRIPTION

Courtesy lights and timed lights

The numerous light sources provided ensure good lighting inside the passenger compartment and/or of some specific points under all conditions.
The courtesy light **F3** in the centre above the windscreen, lights **F23** and **F24** under the dashboard, and lights **F45** and **F46** in the lower part of the doors are timed: they are turned on when one of the two doors is opened, and turned off a few moments after the doors have been closed again, according to a complex logic determined by an electronic device inside the instrument cluster **C10**.

Courtesy lights timing logic

With the ignition key at STOP (or removed);

- opening and closing the driver's door, the lights turn on when the door is opened and turn of **5.5 sec.** after it has been closed. The same occurs also when the passenger's door is opened;
- if a door is opened and left open, the lights stay on for **2 minutes**, and then go off.

Turning the key to RUN:

- the lights go out **immediately** whether the doors are open or closed;
- re-opening one of the doors with the key at RUN, the lights turn on for **2 minutes**, and then go off.

The front courtesy light may also be turned on by hand using the switch provided.
On the front courtesy light, there is also a reading spot lamp which makes for instance reading possible without disturbing the driver.

NOTE: The courtesy light unit is different for the versions with alarm system. Nothing changes however with regard to the operating features described here.

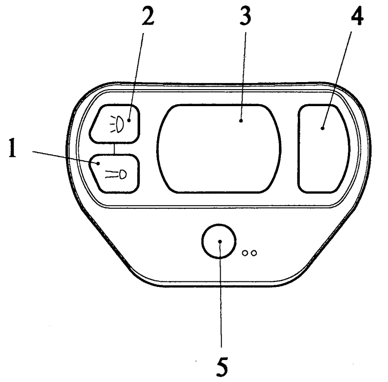

1 - spot light switch
2 - courtesy light switch
3 - courtesy light
4 - spot light
5 - alarm I.R. receiver (See "Alarm system")

A special lamp **F5** illuminates the luggage compartment, which is turned on when the boot is opened.

Doors open warning light

A display on the instrument cluster signals when each door, the bonnet and the boot are open.

FUNCTIONAL DESCRIPTION

Courtesy lights and timed lights

The courtesy light and reading lamp **F3** receive the supply directly through fuse **F16** of fusebox **G1**: this makes it possible to operate the reading lamp or the courtesy light from the corresponding switch **A**; when switch **B** is closed the courtesy light turns on automatically when the doors are opened: the timing signal is generated by an electronic device inside the instrument cluster **C10**, according to the logic described previously.
This signal energizes switch **I26** - located on the bracket next to fusebox **G1** - which is supplied by the line of fuse **F16**.
Relay **I26** sends an earth signal to the courtesy lights for timed operation.
Lights **F23** and **F24** are supplied by the line of fuse **F2** at **G1** and are turned on only by the timing signal (they cannot be operated manually).
Similarly, lights **F45** and **F46** are supplied directly respectively through connector Q and fuse **F1** of fusebox **G1**, and they are turned on only by the timing signal.
The luggage compartment light **F5** is supplied with battery voltage through the line protected by fuse **F16**; it is turned on when the boot is opened and switch **H24** sends an earth signal.
Near light **F5** there is a radio suppressor condenser **N53** (for further details see "Radio system").

Doors open warning lights

The door locking devices **P10** and **P11**, located on each door in correspondence of the lock, also contain a microswitch which closes when the door is open, thereby sending an earth signal to the instrument cluster **C10**, and turning on the corresponding led.
N.B. inside the cluster the same signal is also sent to the electronic device which operates the courtesy light timing logic.

In the same way, switch **H24** (to be found on the boot telescopic prop) closes when the boot is open, sending an earth signal to the instrument cluster **C10**, thereby turning on the corresponding led.

Lastly, switch **H44** also sends an earth signal when the bonnet is open, turning on the corresponding led on the instrument cluster **C10**.
N.B. These four "door open" signals are also used by the alarm system (for further details see "Alarm System").

FAULT-FINDING TABLE

Fault	Component to be checked														
	F1	F16	F2	F3	F24	F23	F45	F46	F5	H24	I26	C10 (1)	H44	P10	P11
Courtesy light, under all circumstances		•		•											
Courtesy light, timed		•									•	•			
Light under RH dashboard			•			•					•	•			
Light under LH dashboard			•		•						•	•			
RH door light	•							•			•	•			
LH door light							•				•	•			
Boot light		•							•	•					
All timed lights		•									•	•			
RH door open warning led												•		•	
LH door open warning led												•			•
Bonnet open warning led												•	•		
Boot open warning led										•		•			

(1) The instrument cluster **C10** cannot be overhauled. Therefore in the event of a fault, it is not possible to change an individual led or the electronic timing device and a new complete instrument cluster must be installed.

LOCATION OF COMPONENTS

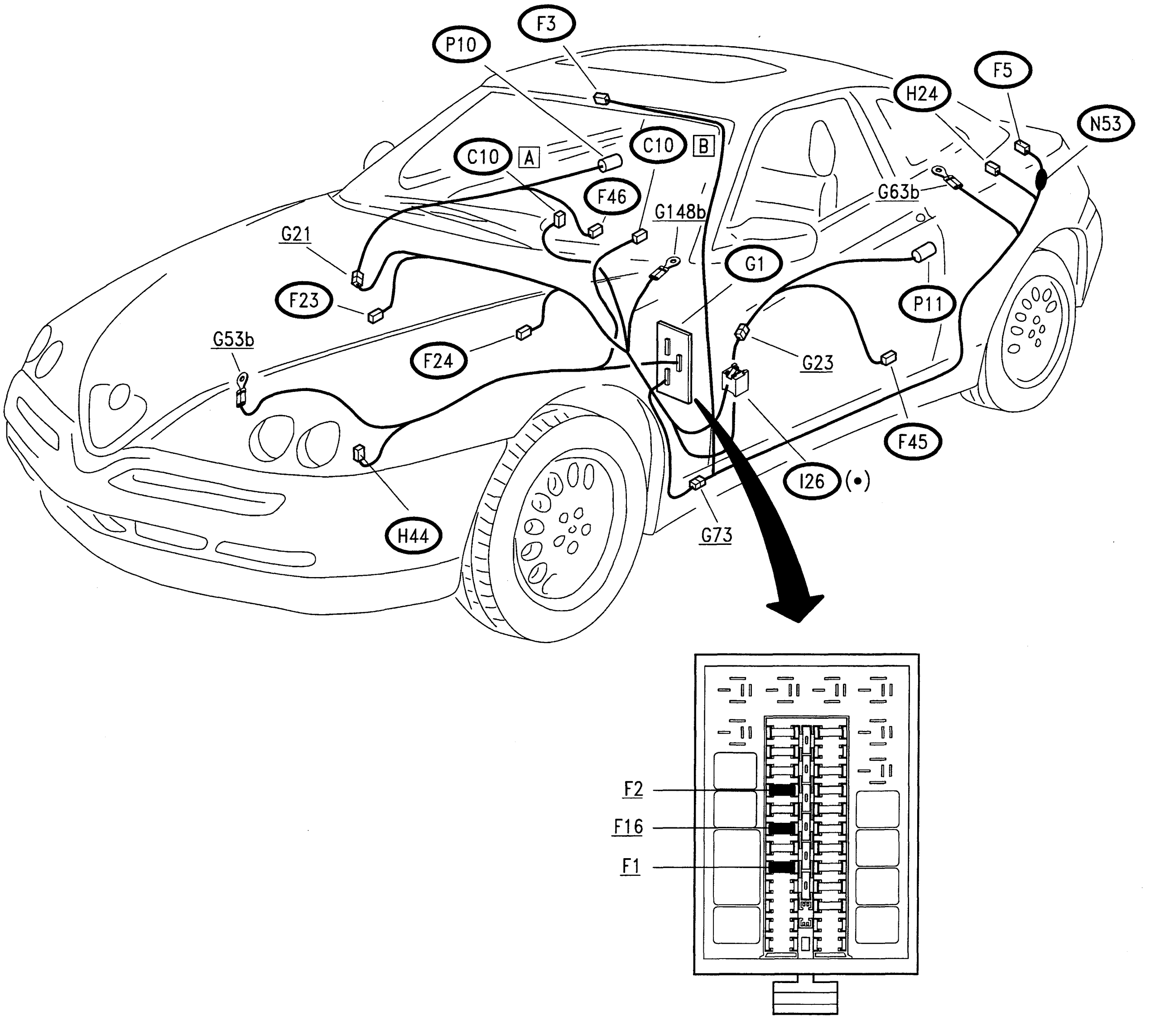

(•) Green base

DIRECTION INDICATORS AND HAZARD WARNING LIGHTS

INDEX

WIRING DIAGRAM

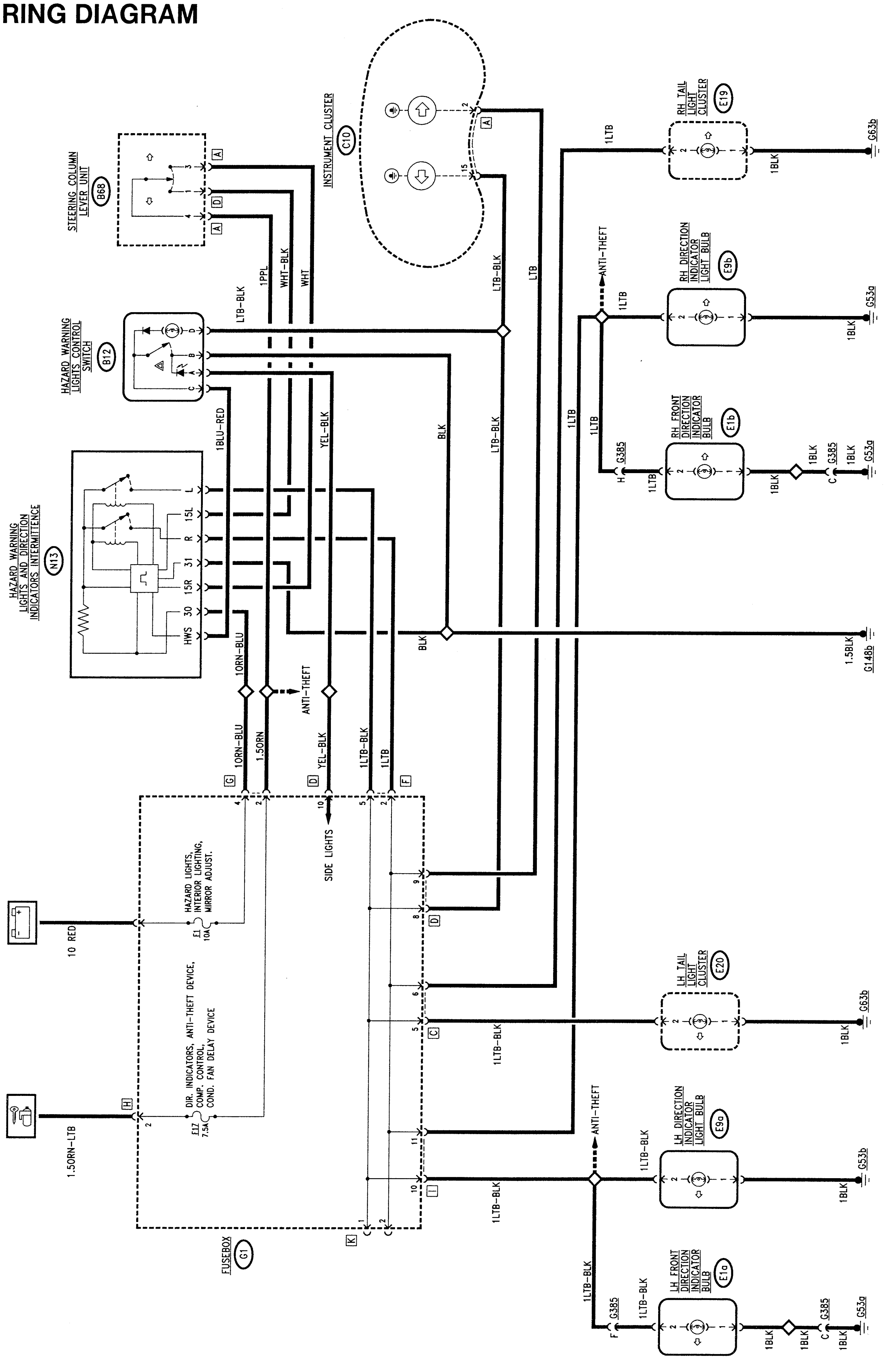

GENERAL DESCRIPTION

The intermittent direction indicators and hazard warning lights delineate the vehicle clearance.

The right or left direction indicators are turned on raising or lowering the lever on the steering column lever unit; the hazard warning lights (right and left indicators activated simultaneously) are switched on from the switch on the centre console.
The direction indicators operate when the ignition key is engaged, for the obvious safety reasons, they are supplied directly by the battery.
Two intermittent warning lights on the instrument cluster flash while the right and left indicators are operating. The hazard warning light switch indicates that these are operating by illuminating when they are turned on.

The circuit of the direction indicators is protected by a special fuse of fusebox **G1** while another fuse protects the circuit for the hazard warning lights.

FUNCTIONAL DESCRIPTION

The circuit is controlled by the hazard warning light and direction indicator flasher **N13** to be found next to the fusebox.

The flasher, earthed at pin 31, is supplied at pin 30 directly from the battery via the line of fuse **F1** of fusebox **G1**.
Pins 15R and 15L receive the signals (12V) from the lever unit **B68** when the line protected by fuse **F17** of **G1** is "key-operated" for turning on the right indicator (pin 15R) and the left indicator (pin 15L).

Pin HWS receives a signal (earth) when the hazard warning light switch **C16** is pressed.

Pins R and L send the intermittent supply signals for all the indicators: from pin R for those on the right, from pin L for those on the left, according to the following logic:

- only pin R (RH) if the signal reaches pin 15R
- only pin L (LH) if the signal reaches pin 15L
- both pins R and L if the signal reaches pin HWS.

This way operating the stalk of the lever unit **B68** turns on the righthand indicators (**E1b, E9b** and **E19**) or the left ones (**E1a**, **E9a** and **E20**) and simultaneously the corresponding warning light on the instrument cluster **C10** is turned on.

When switch **B12** is pressed, the right and left direction indicators are supplied contemporaneously; also the special light (pin D3) is supplied which lights up when the hazard warning lights are switched on. A led (pin A) illuminates the ideogram of the switch when the side lights are on.

LOCATION OF COMPONENTS

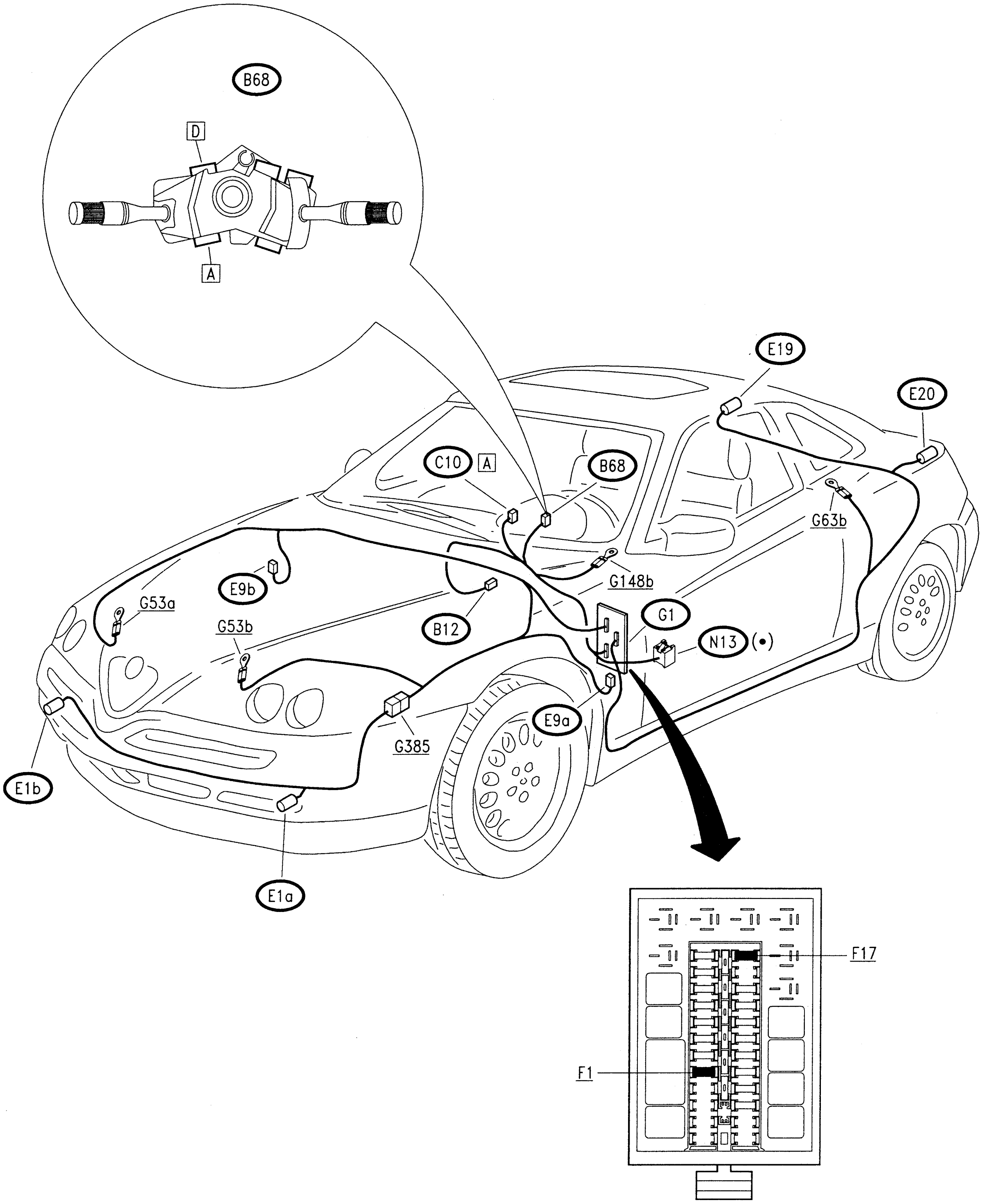

(•) Black base

FAULTFINDING TABLE

Failure	Component to be checked											
	F1	F17	E1b	E1a	E9a	E9b	E19	E20	N13	B68	B12	C10 (1)
All the direction indicators	•	•							•	•		
Hazard warning lights	•								•		•	
All the RH direction indicators									•	•		
All the LH direction indicators									•	•		
RH front light			•									
RH side light						•						
RH rear light							•					
LH front light				•								
LH side light					•							
LH rear light								•				
RH indicator warning light												•
LH indicator warning light												•
Hazard warning light switch not illuminated with lights on											•	

(1) The instrument cluster **C10** cannot be repaired. Therefore in the event of a failure it is not possible to change the single warning light and a new complete cluster must be fitted.

CHECKING COMPONENTS

Hazard warning light and indicator flasher (N13)

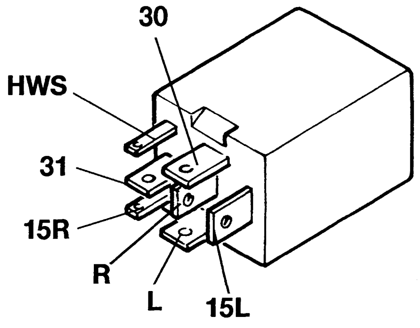

Checking the device: see **TEST A**

HAZARD WARNING LIGHT AND INDICATOR FLASHER (N13) | TEST A

TEST PROCEDURE		RESULT	CORRECTIVE ACTION
A1	CHECK VOLTAGE – Disconnect the flasher **N13** and on the base check for 12V at pin 30 of **N13**	OK ▶	Carry out **step A2**
		~~OK~~ ▶	Check fuse **F1** from fusebox **G1**. If necessary replace connection between **N13** and **G1**
A2	CHECK EARTH – Check for 0 V at pin 31 of **N13**	OK ▶	Carry out **step A3**
		~~OK~~ ▶	Restore the wiring between **N13** and earth **G148b**
A3	CHECK INTERMITTENT VOLTAGE – With the ignition key turned, operate the RH indicator and check for 12 V at pin 15R of **N13**; operate the LH indicator in the same way, check pin 15L of **N13**	OK ▶	Carry out **step A4**
		~~OK~~ ▶	Restore the wiring between **N13** and lever unit **B68**, or replace the latter
A4	CHECK EARTH – Operate the hazard warning light switch and check for 0V at pin HWS of **N13**	OK ▶	Insert device **N13** on its base and continue with **step A5**
		~~OK~~ ▶	Restore the wiring between **N13** and switch **B12**, or change the latter
A5	CHECK INTERMITTENT VOLTAGE – Operate the RH indicator and check for **intermittent** 12V at pin R of **N13**; do the same operating the LH indicator at pin L and operating the hazard warning lights at both pin R and pin L	OK ▶	DEVICE **N13** IS WORKING PROPERLY. Check the connections with the other components
		~~OK~~ ▶	CHANGE DEVICE **N13**

STOP LIGHTS AND REVERSING LIGHTS

INDEX

WIRING DIAGRAM

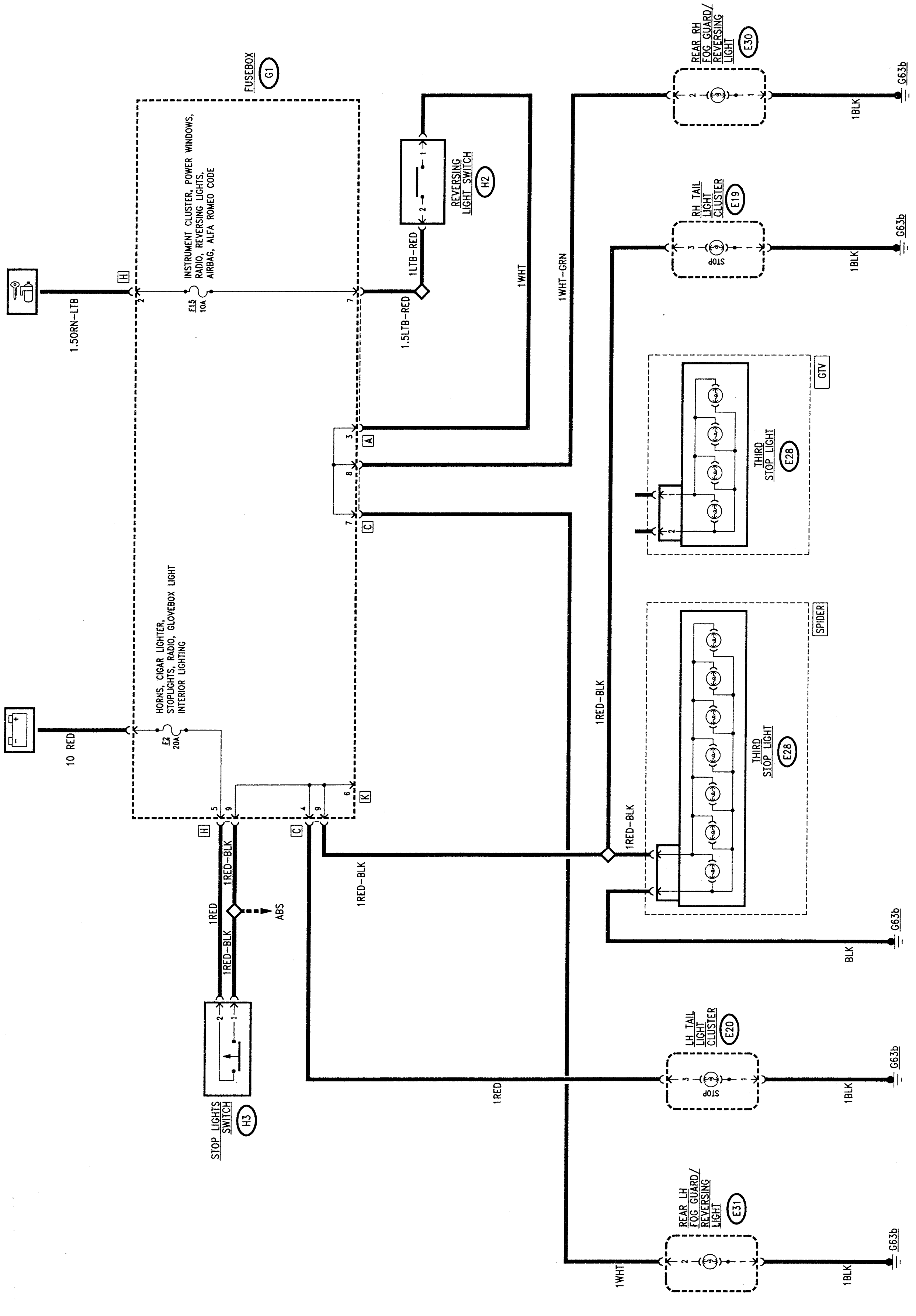

GENERAL DESCRIPTION

Stop lights

The car stop lights are operated each time the brake pedal is pressed; two of them are located at the rear in the side lights, one is located in the centre (the so-called "third stop" light.
The lights are turned on automatically through the switch on the brake pedal: it is operated under all conditions, even with the ignition key off.
The circuit is protected by a special fuse.
The braking signal from the switch is also sent to the ABS system control unit which "recognizes" the situation and controls braking accordingly (see "ABS").

Reversing lights

The car is fitted with two reversing lights located in the right and left tail lights.
When reversing gear is selected, they are turned on automatically through a special switch on the gearbox.
The circuit is protected by a special fuse.
The reversing light is operated with the ignition key engaged, regardless of the other lights.

FUNCTIONAL DESCRIPTION

Stop lights

The stop lights circuit is supplied directly by the battery through fuse **F2** of fusebox **G1**.
The stop lights switch **H3** comprises a contact which closes when the brake pedal is pressed, through which the stop lights are supplied in the rear side lights **E19** (right), **E20** (left) and centre **E28**; this is different in shape for the Spider and GTV.

Reversing lights

The reversing light circuit is "turn-key" supplied via fuse **E15** of fusebox **G1**.
When reverse gear is engaged switch **H2** supplies the right reversing light **E30** and the left one **E31**.

FAULTFINDING TABLE

Failure	Component to be checked								
	F2	E20	E19	E28	H3	F15	E30	E31	H2
All the stop lights	•				•				
RH stop light			•						
LH stop light		•							
Third stop light				•					
Both reversing lights						•			•
RH reversing light							•		
LH reversing light								•	

LOCATION OF COMPONENTS

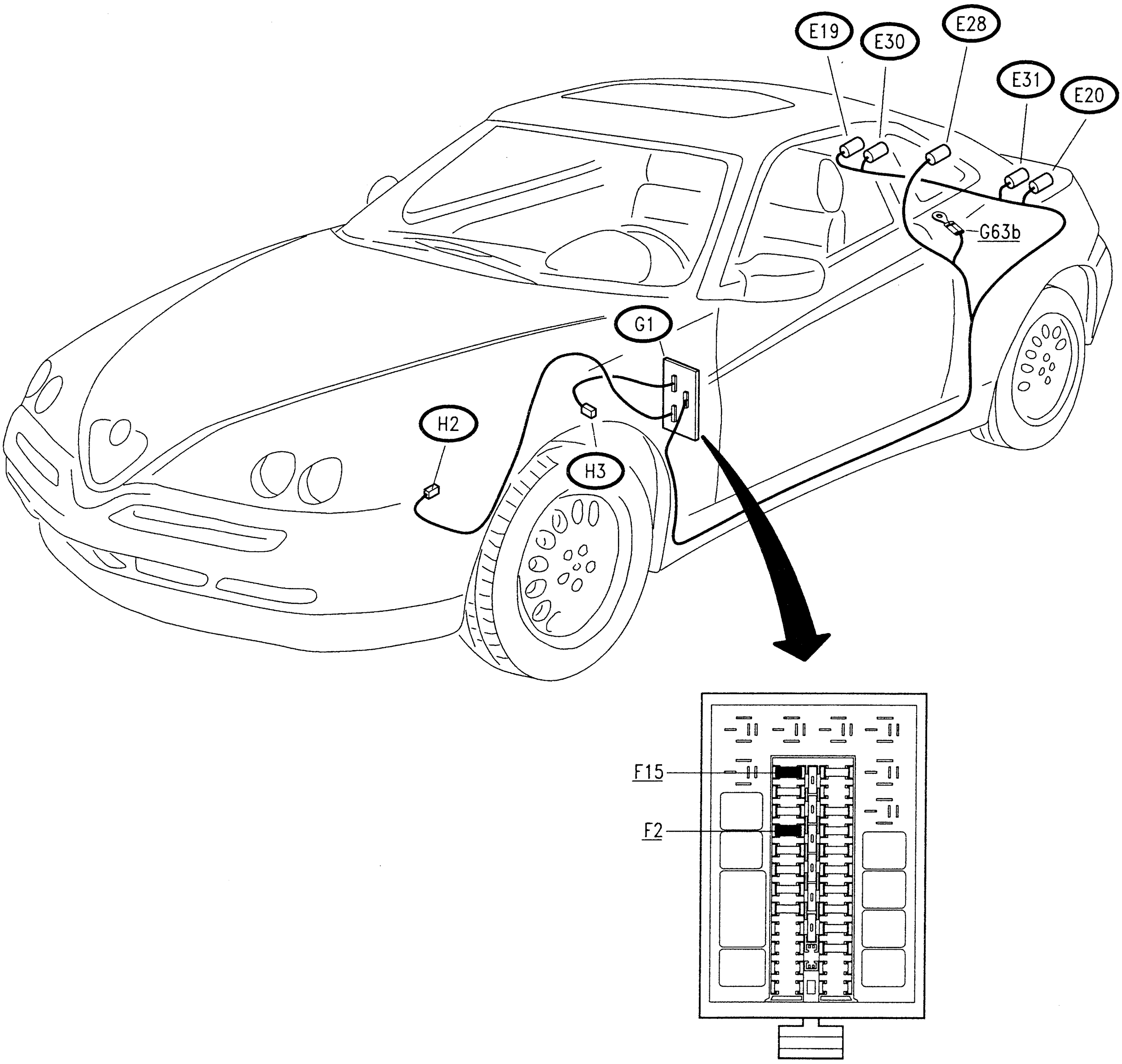

HORNS, CIGAR LIGHTER/ CURRENT SOCKET

INDEX

WIRING DIAGRAM

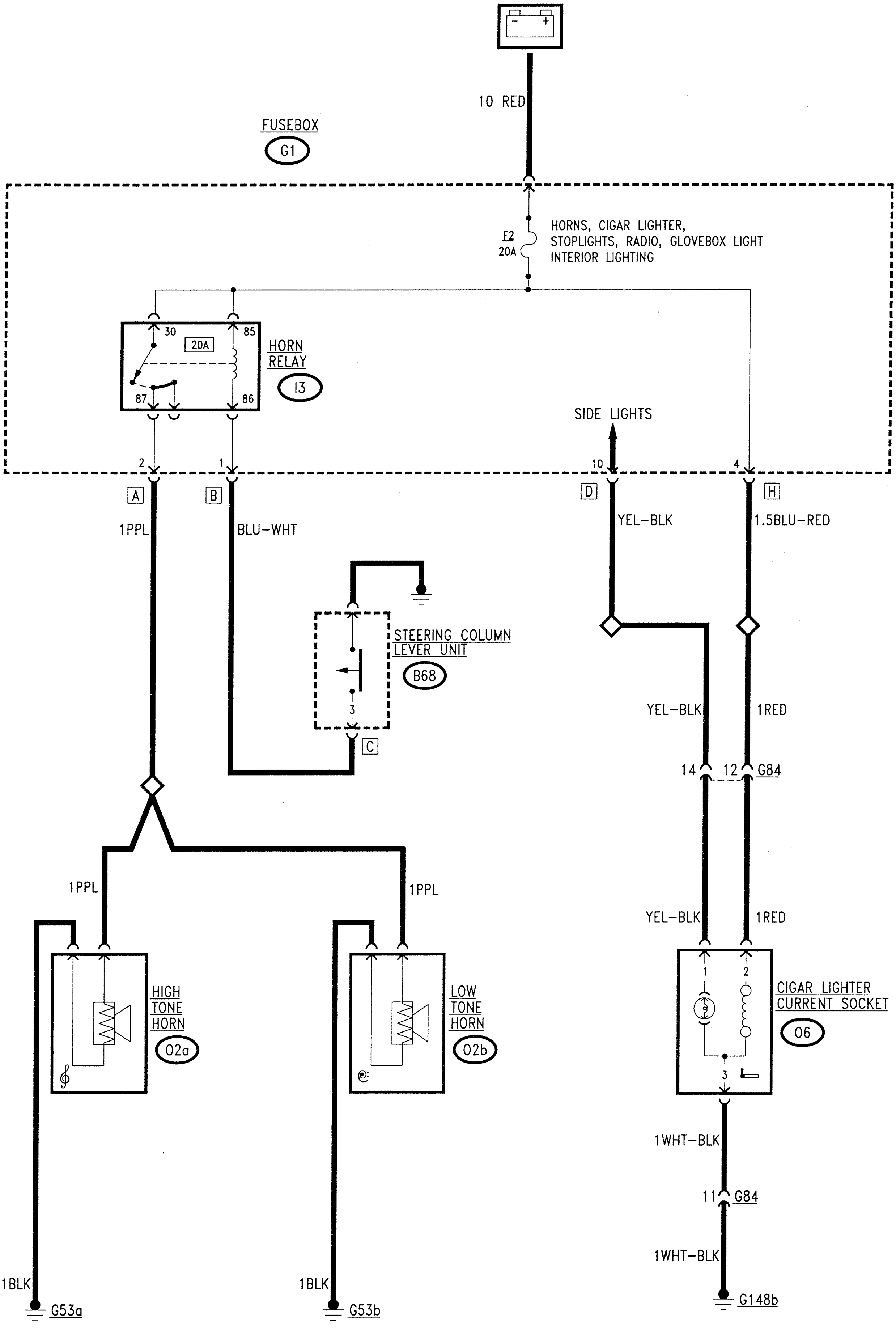

GENERAL DESCRIPTION

Horns

The car horn system is formed of two horns with different tones: one high tone and the other low tone: they are both activated simultaneously.

The horns are operated pressing one of the two switches on the spokes at the sides of the Air Bag cushion.

For the obvious safety reasons the horns can be activated at all times even if the ignition key is not engaged.

Cigar lighter/current socket

The car offers the occupants an ashtray in the centre console; next to it there is the "cigar lighter" resistance, which is turned on pressing it into its socket: after a few seconds it pops out automatically, ready for use. This standard socket may also be used for connecting other instruments or devices (provided that they work at 12V).

N.B.: The socket is provided with a thermal protection device: in the event of connections with devices that absorb a high amount of energy, this connection may "trip".

The socket is always supplied and may therefore be used at all times, even with the ignition key disengaged.

FUNCTIONAL DESCRIPTION

Horns

The horns relay switch **I3**, located in fusebox **G1**, is supplied by the battery through fuse **F2**, also in **G1**.

The coil of relay switch **I3** is energized with an earth signal leading from the horn control switch which is connected to the lever unit **B68**. This connection is made in a special way due to the presence of the Air Bag: see "Checking Components" in this section).

This way the supply is sent by the relay switch to the horns **O2**, which are already connected to earth.

Cigar lighter/current socket

The connection socket for the cigar lighter resistance **06** is supplied directly by the battery via fuse **F2** of fusebox **G1**, which suitably protects the circuit. The light bulb of the cigar lighter **06** is turned on when the sidelights are on.

FAULTFINDING TABLE

Failure	Component to be checked				
	F2	O2	I3	B68	O6 (1)
Cigar lighter - current socket	•				•
Cigar lighter light					•
Horns failing to work	•	•	•	•	
Horns working badly (out of tune)		•			

(1) In the event of the cutting in of the current socket **thermal protection device,** this can be replaced at least 5 times without the need to change the complete socket

LOCATION OF COMPONENTS

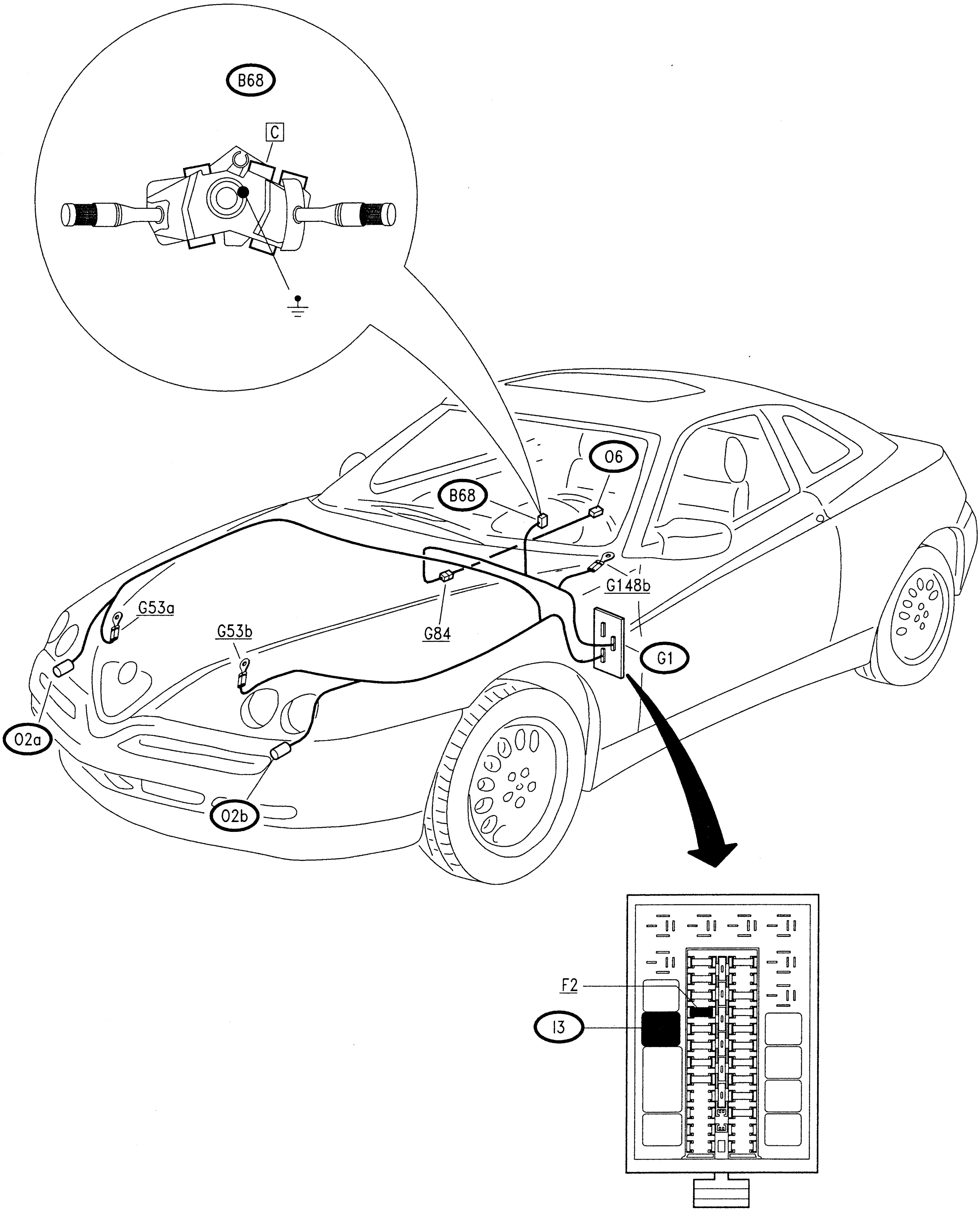

CHECKING COMPONENTS

Horns control (in B68)

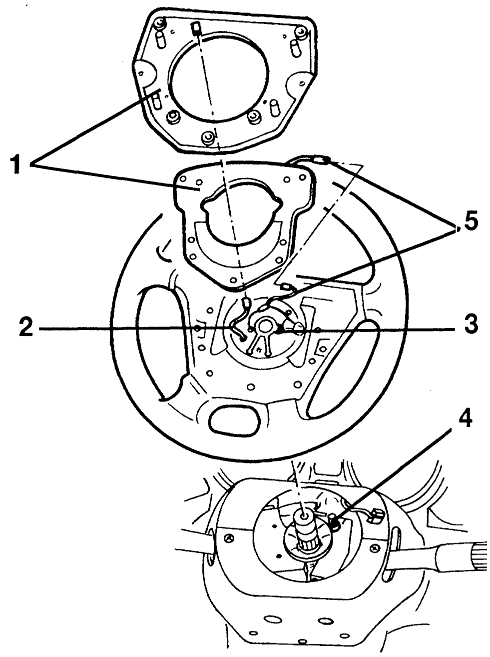

The horn control device comprises two plates (separated by springs: pressing the buttons at the sides of the airbag cushion closes the electrical contact between the plates: the upper plate is connected by the BRN cable (2) and the contact of the clock spring cable (3) with the pushbutton (4) of the steering column lever unit.

The lower plate is connected to earth on the steering column via BLK cable (5).

WARNING: When working on the steering wheel fitted with Air Bag, particularly for removing the clock spring, carefully adhere to the instructions given in the corresponding section.

Horns O2

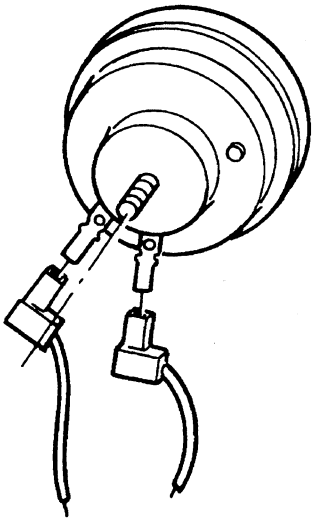

SPECIFICATIONS	
Nominal voltage rating	12V
Current absorbed	<10A (the pair)
Total horn sound level	106 ÷ 118 dB a 2m
Sound level in band 1800 ÷ 3550 Hz	≥ 105 dB a 2m
Horn sound level L-H	≥ 108 dB a 2m
Fundamental frequency type H	480 ÷ 530 Hz
Fundamental frequency type L	380 ÷ 430 Hz

WINDSCREEN WIPER/WASHER

INDEX

WIRING DIAGRAM

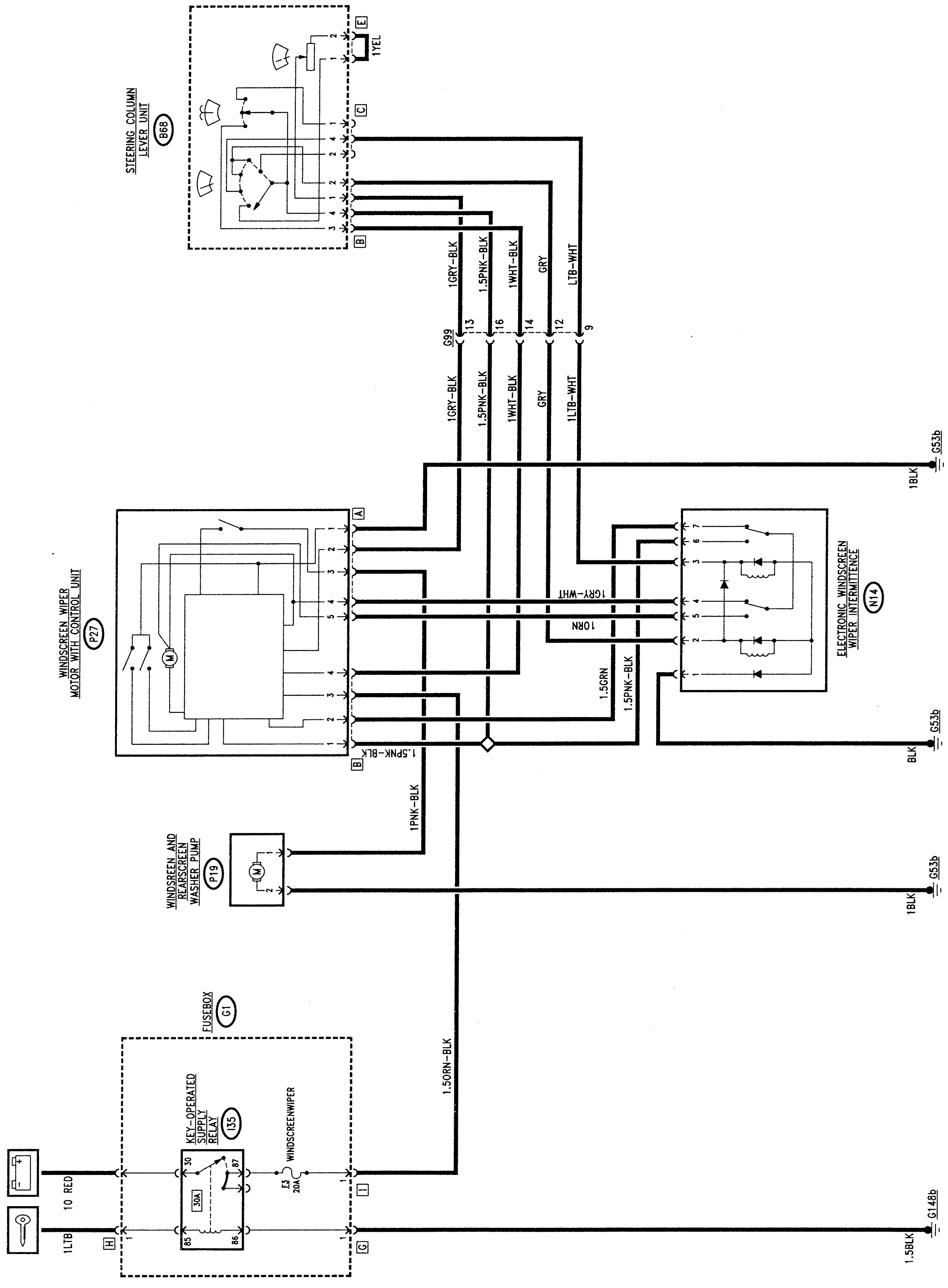

GENERAL DESCRIPTION

With the lever on the righthand side of the steering wheel it is possible to engage the different functions of the windscreen washer/wiper system.
The windscreen wiper device can work continuously and intermittently at different speeds: moving the lever downwards firstly operates intermittent operation, then continuous operation from the first speed, then at the second speed: these functions remain operation until the lever is pushed upwards again.
With the lever in the intermittent position, through the special ring switch it is possible to select the different lengths of the intermittent functions.
The windscreen washer is engaged slightly pulling the lever towards the steering wheel: this way the windscreen washer pump is operated for a few seconds or until the lever is released.

NOTE: operating the windscreen washer without detergent fluid in the reservoir can damage the pump.

The entire system is regulated by an electronic windscreen wiper device integrated in the wiper motor, with the help of another electronic device to be found near the fusebox; this controls the windscreen wiper motor and the windscreen washer pump.

FUNCTIONAL DESCRIPTION

The control unit in the windscreen wiper motor **P27** is supplied at pin B3 by key-operated voltage via fuse **F3** and relay **I35** of fusebox **G1**.
Pin A1 of **P27** is connected to earth.

The supply for operating the windscreen wiper with lever switch **B68** leads from **P27**, pin 81 and reaches pin 4 of connector B od **B68**; the same supply also reaches device **N14**, pin 6, while pin 1 of the same device is connected to earth.

The operating logic of the different functions is as follows:

- windscreen wiper at first speed: the contact at pin 4 of connector C of **B68** closes which sends the supply to pin 3 of **N14**; this "relays" the control from pin 4 to pin A4 of **P27** which operates the motor at first speed.
- windscreen wiper at second speed: the contact at pin 2 of connector B of **B68** closes which sends the supply to pin 2 of **N14**; this "relays" the control from pin 5 to pin A5 of **P27** which operates the second speed motor;
- intermittent wiping operation: the contact at pin 1 of connector B closes also through bridge E of **B68**: this signal differs depending on the position of the potentiometer, and determines the different intermittent speeds: this way the supply is sent to pin A2 of **P27** which operates the windscreen wiper intermittently;
- "end of stroke": the signal from pin B2 of **P27** at pin 7 of **N14** is the "motor stop" command: i.e. it informs that the motor has stopped, which is then activated for another moment to park the blades;
- windscreen washer: the contact closes at pin 3 of connector 8 of **B68** which sends a command to pin B4 of **P27**, which "relays" the supply for the motor **P19**, as well as briefly operating the windscreen wiper.

FAULTFINDING TABLE

Failure	Component to be checked				
	F3	P27	P19	N14	B68
Windscreen wiper (cont. speed)	•	•		•	•
Windscreen wiper (intermitt.speed)	•	•			•
Windscreen/rearscreen washer	•		•		•

LOCATION OF COMPONENTS

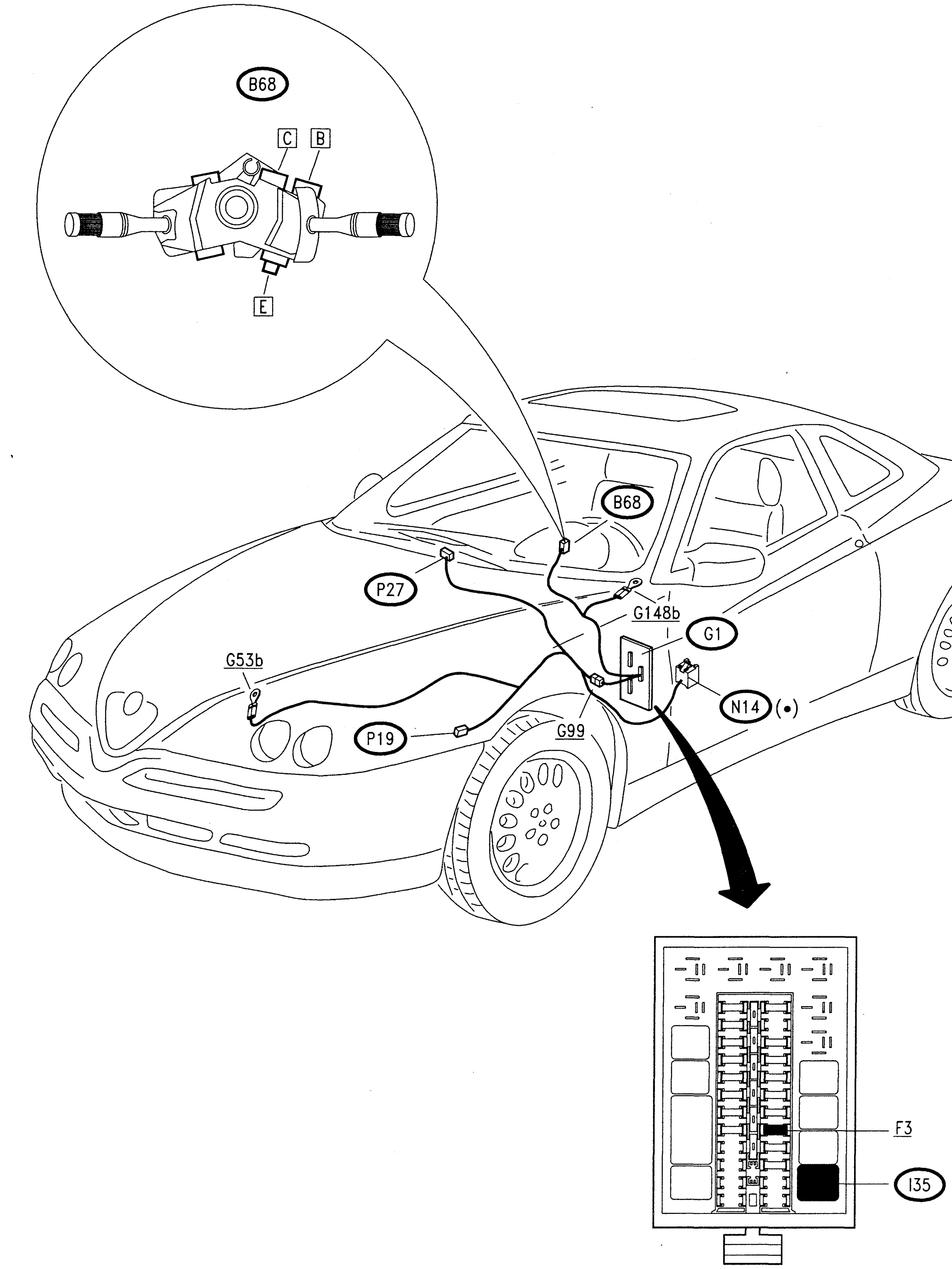

(•) Brown base

CHECKING COMPONENTS

Steering column lever unit (B68)

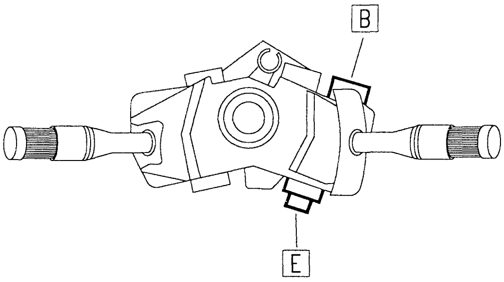

Check operation of intermittence: resistance between pins B1 and E2 in relation to the position of the ring

Position	Resistance [kΩ]	Speed [cycles/min]
1	2 ± 20%	27
2	23 ± 20%	15
3	36 ± 20%	12
4	47 ± 20%	10
5	66 ± 20%	8

Electronic windscreen wiper device (N14)

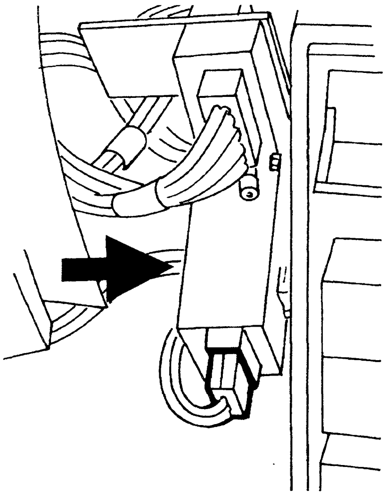

Checking the device: see **TEST A**

Windscreen wiper motor with control unit (P27)

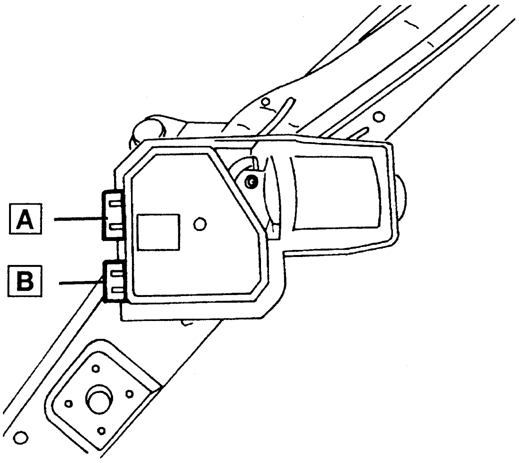

Checking the device: see **TEST B**

Windscreen washer pump (P19)

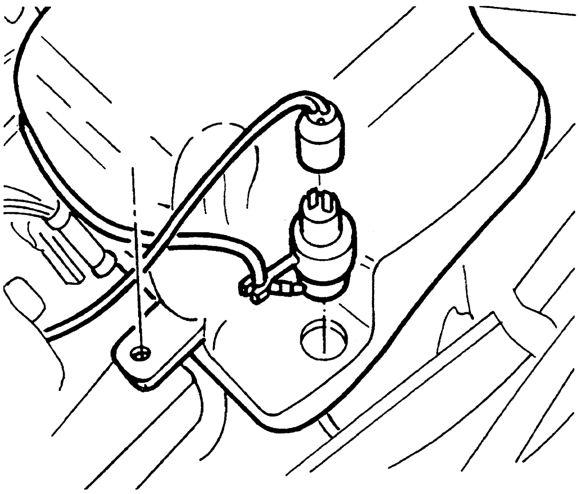

SPECIFICATIONS	
Max. voltage	13.5 V
Current	≤ 4 A
Flow rate	≥ 3.5 l/min.
Pressure	≥ 1.7 bar

CHECK ELECTRONIC WINDSCREEN WIPER DEVICE (N14) — TEST A

TEST PROCEDURE		RESULT	CORRECTIVE ACTION
A1	CHECK VOLTAGE	OK ►	Carry out **step A2**
	– Disconnect device **N14** and check on the base, with the key at RUN, for 12V between pins 1 and 6	~~OK~~ ►	Check fuse **F3** of fusebox **G1**; check device **P27** (see **TEST B**), or the wiring between **N14** and **P27** and earth **G53b**
A2	CHECK COMMAND SIGNALS	OK ►	Carry out **step A3**
	– Reconnect device **N14**. Operating the windscreen wiper at first speed, check for 12V at pin 3; in the same way operating the second speed, for 12V at pin 2	~~OK~~ ►	Check the wiring between **N14** and **B68** or change the latter
A3	CHECK ACTUATING SIGNALS	OK ►	Device **N14** IS WORKING PROPERLY. Check motor **P27**
	– Operating the windscreen wiper at first speed, check for 12V at pin 4 of **N14**; with the second speed at pin 5	~~OK~~ ►	CHANGE DEVICE **N14**

CHECK WINDSCREEN WIPER MOTOR WITH CONTROL UNIT (P27) — TEST B

TEST PROCEDURE		RESULT	CORRECTIVE ACTION
B1	CHECK VOLTAGE	OK ►	Carry out **step B2**
	– Disconnect device **P27** and check, with the key at RUN, for 12V between pins A1 and B3 of **P27**	~~OK~~ ►	Check fuse **F3** of fusebox **G1**; check the wiring between **G1**, **P27** and earth **G53b**
B2	CHECK WINDSCREEN WIPER COMMAND SIGNALS	OK ►	Carry out **step B3**
	– Reconnect device **P27**. Check the operation of the windscreen wiper at first speed, applying 12V at pin A4 of **P27**, at second speed with 12V at pin A5	~~OK~~ ►	CHANGE DEVICE **P27**
B3	CHECK INTERMITTENCE SIGNAL	OK ►	DEVICE **P27** IS WORKING PROPERLY. Check the connections with **N14** and **B68**
	– Check intermittent operation applying a variable signal at pin **B4** of **P27**	~~OK~~ ►	CHANGE DEVICE **P27**

NOTE: If the windscreen wiper stops along its stroke and does **not** return automatically to the end of the stroke, check the connection between **N14** (pin 7) and **P27** (pin B2)

INDICATORS AND WARNING LIGHTS

INDEX

INSTRUMENT CLUSTER

The main instrument cluster **C10** provides all the indications and information concerning the conditions of the vehicle needed for safe and troublefree driving. The instrument cluster is of the analogue type, with two generously-sized indicators for the tachometer and rev counter, and a series of clearly visible warning lights which complete the information for the driver.

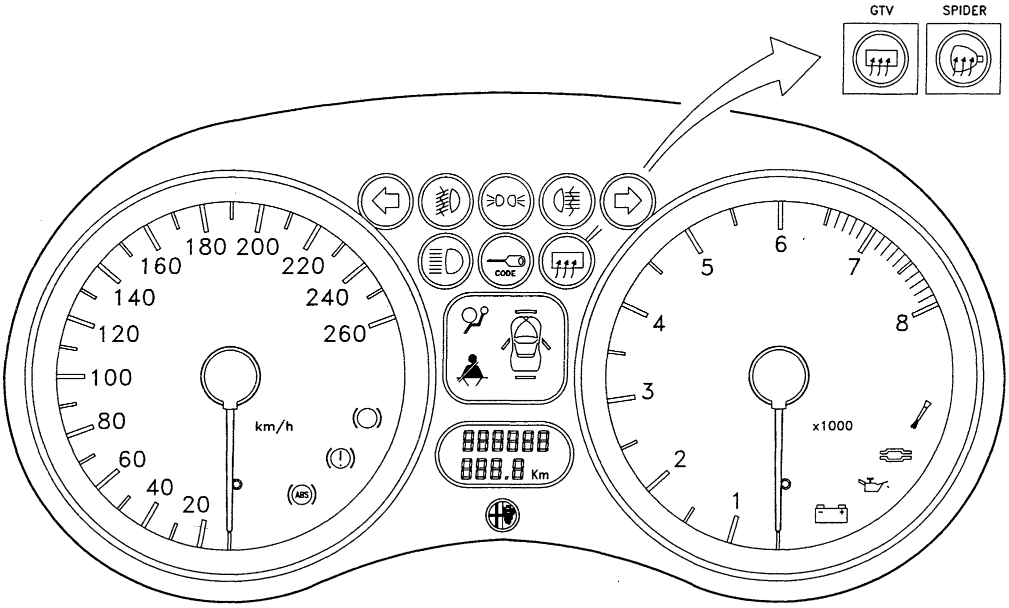

LH direction indicator
fog lights
side lights
rear fog guards
RH direction indicator
high beams
electronic key system
rearscreen defrosting (GTV)
mirror defrosting (Spider)
Air Bag system fault

safety belts
doors and bonnets open
ABS system failure
handbrake and brake fluid level
brake pad wear
generator
minimum oil pressure
catalyst temperature (for certain Markets only)
injection failure (Check Engine)

AUXILIARY INSTRUMENT CLUSTER

The auxiliary cluster **C18** is located in the centre of the dashboard and contains the coolant temperature gauge and fuel level gauge with the corresponding warning lights.
An analogue clock completes this additional cluster.

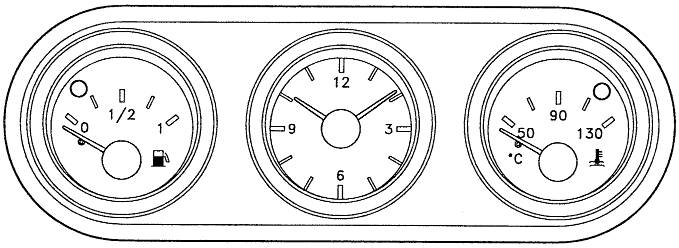

INTERNAL WIRING DIAGRAM (printed circuit)

These wiring diagrams represent the printed circuit and the connections inside the instrument cluster **C10** and of the auxiliary panel **C18**.
In the other diagrams concerning the outside connections of one of the panels, only the lines concerned are shown, while this diagram gives an overall view of the entire instrument cluster **C10** or panel **C18**.

NOTE: not all the output pins are connected for all the versions of the car: some lines in the diagram of **C10** therefore might not be used (e.g. warning lights not connected) but they are still present on the printed circuit, which is the same for all versions.

Main cluster internal wiring diagram (C10)

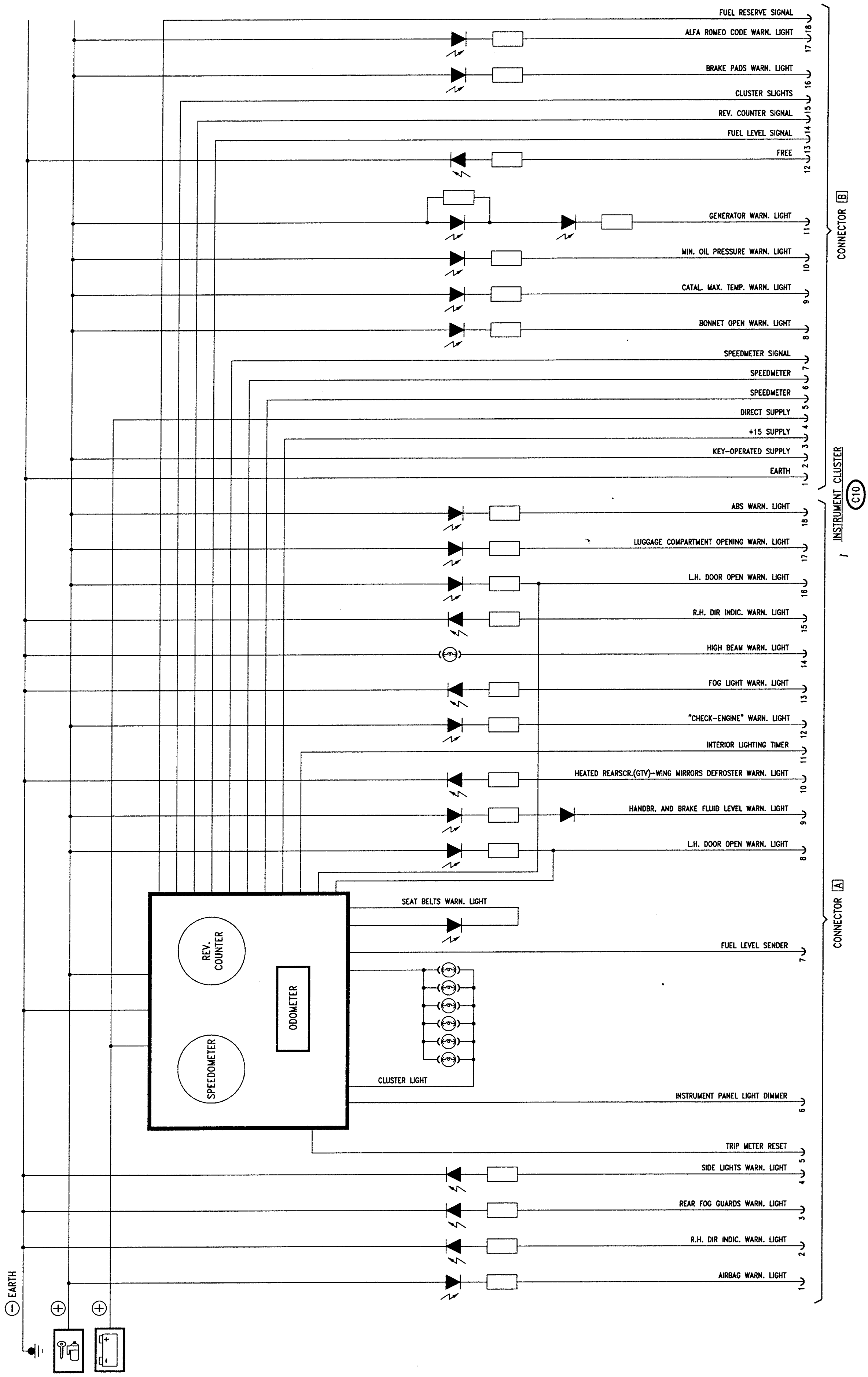

Auxiliary panel internal wiring diagram (C18)

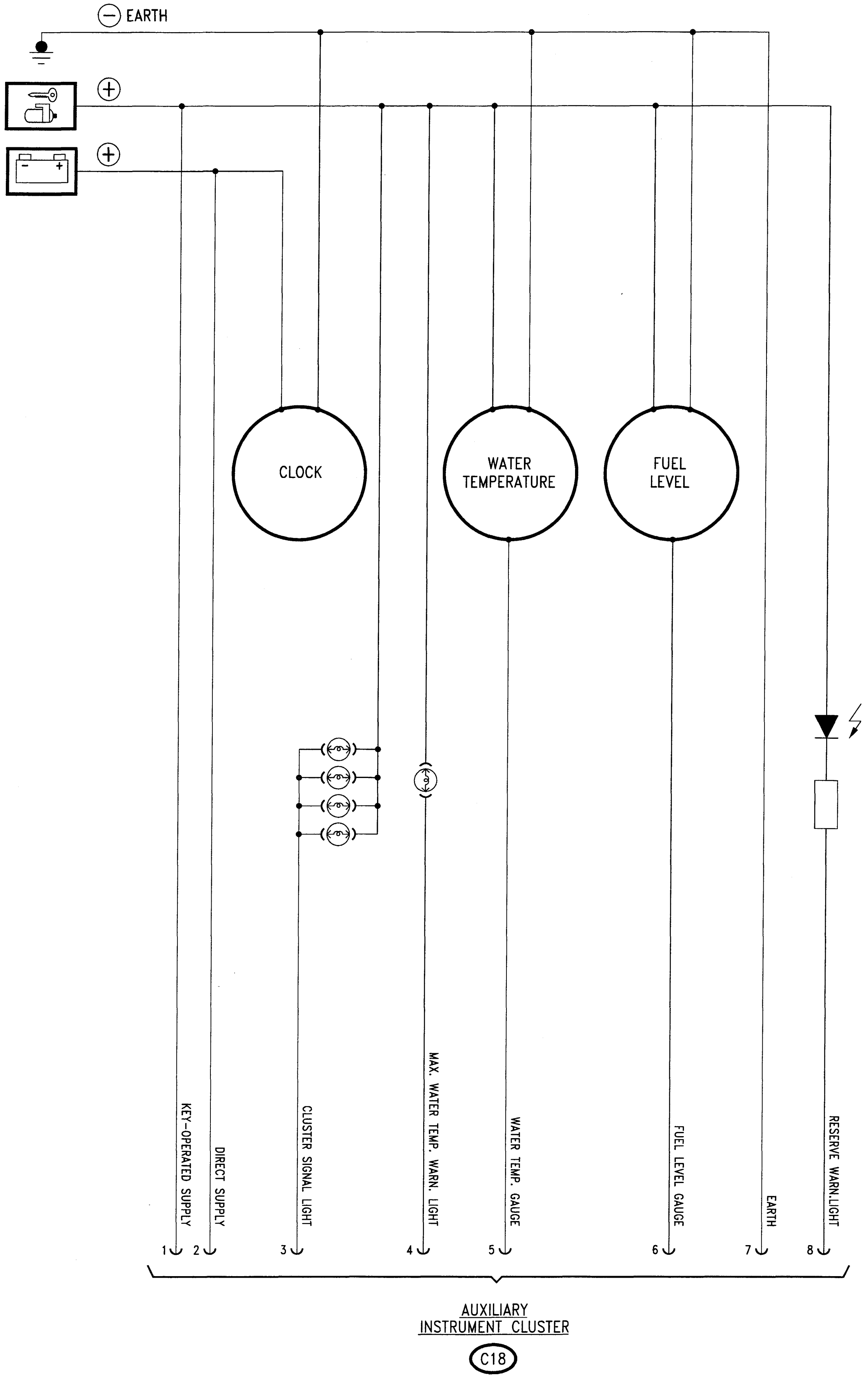

INSTRUMENT CLUSTER - CLOCK SUPPLY AND LIGHTING

The main instrument cluster **C10** and the auxiliary panel **C18** are supplied by direct voltage via fuse **F16** and with "key- operated" voltage - up to chassis no.___ via fuse **F15** of fusebox **G1**; from chassis no.___ via wander fuse **G389** (10A). Connection takes place respectively at pins 4 and 2 of connector B of the cluster **C10** and at pin 2 of panel **C18**.

Cluster **C10** is earthed by the cable leading from pin 1 of connector B, panel **C18** from pin 7, both towards earth **G53a**.

The two panels are lit by a set of bulbs (replaceable) adjusted by switch **B16** which enables the various levels of lighting pressing the pushbutton ▻ a number of times: a signal is sent to pin 6 of connector A of **C10** which reaches the electronic device inside the actual cluster. From the device the supply - variable between 12V (max. intensity) and 5V (min. intensity) through 10 intermediate steps - reaches the bulbs of panel **C10** and, via the line from pin 15 connector B of **C10** to pin 3 of **C18**, to panel **C18** itself.

Clock

The clock, located in panel **C18**, is supplied by direct voltage via fuse **F16** of fusebox **G1** which is connected to pin 2, while pin 1 is earthed.

N.B.: disconnecting the battery the clock stops, therefore it must be set using the pin provided when the power is reconnected.

Wiring diagram

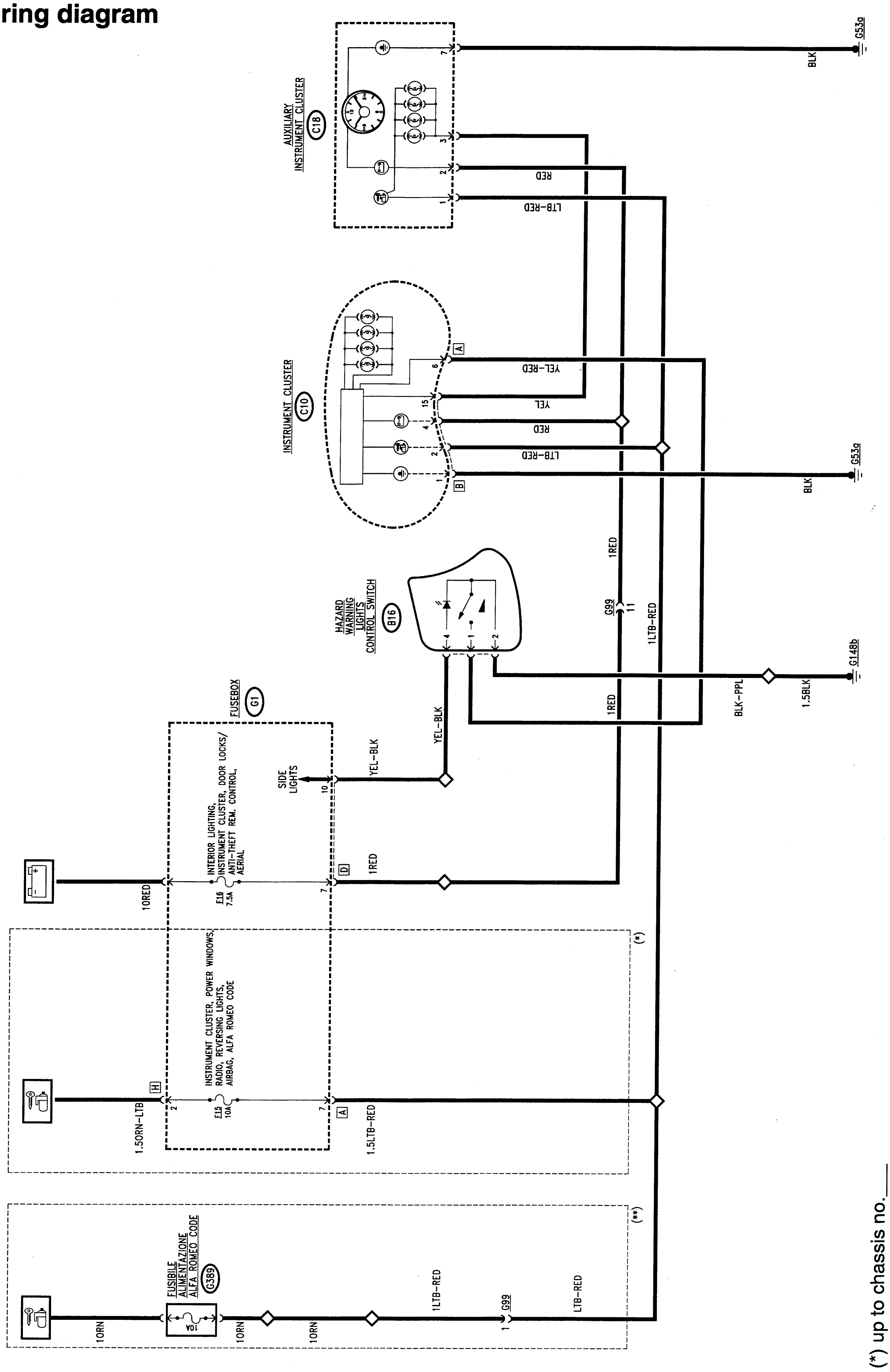

(*) up to chassis no.___
(**) from chassis no.___

MAIN INSTRUMENT CLUSTER: INDICATORS AND WARNING LIGHTS

The main cluster **C10** contains a number of indicators and warning lights.

The **rev counter signal** is supplied to the instrument cluster **C10** by the engine injection/ignition control unit **S11** which processes an "rpm" signal thanks to sensor **S31**.
The signal reaches the cluster **C10** at pin 14 of connector B, leading from connector **G133a** which connects the injection/ignition system with the other circuits; inside the cluster it then reaches the electronic device that operates the rev counter.

The **speedometer signal** is supplied by the speedometer sensor **L17**: this is fitted on the gearbox and detects the speed of the car at all times.
This device is a pulse generator which generates and processes a signal that is proportionate with the speed of the camshaft at the gearbox output, therefore with that of the wheels: it is a "square-wave" signal with 16 pulses per turn generated by a Hall-effect sensor.
The sensor **L17** is supplied at pin 3 with stabilised voltage through an electronic device inside the instrument cluster (from pin 3 of connector B of **C10**); pin 1 is connected to earth **G53b**, while the tachometric signal (proportionate with the speed of the car leaves pin 2 and is sent to the instrument cluster **C10**, pin 7 of connector B, and from here to the electronic device that operates the speedometer and the two mileage recorders (total and trip).

The same signal is also sent to the injection/ignition system which needs the "car speed".

Switch **B40** km makes it possible to **reset the trip meter** sending an earth pulse to the electronic device inside **C10**, pin 5 of connector A.

N.B. The seat belts warning light is NOT connected to the seat belt buckle: it does not turn on to indicate that the belt has not been fastened, but is turned on by a command from the electronic device of C10 for six seconds when the engine is started under all circumstances (seat belt fastened or not, engine running or not), and then goes off.

Two warning lights alert the driver in the event of problems on the **braking system**.

The two brake pad switches **H9** right and **H10** left are formed of a microswitch on the pad that closes to earth when the thickness of the pad thins, sending a signal to the instrument cluster **C10** at pin 16 of connector B, thereby turning on the "**brake pad wear**" warning light.

The handbrake switch **H1** closes when the handbrake lever is pulled and supplies a signal to the instrument cluster **C10**, at pin 9 of connector A, turning on the "**handbrake engaged**" warning light.

The same warning light is also turned on to indicate "**low brake fluid level**" through switch **H17** located in the fluid reservoir: this is a float device which closes a contact when the level of the fluid in the brake fluid reservoir falls below a certain reference.

The minimum oil pressure contact **L2**, fitted on the crankcase, closes when the pressure falls below a certain limit sending an earth signal to the cluster **C10** at pin 10 of connector B and thereby turning on the "**minimum oil pressure**" warning light.

Wiring diagram

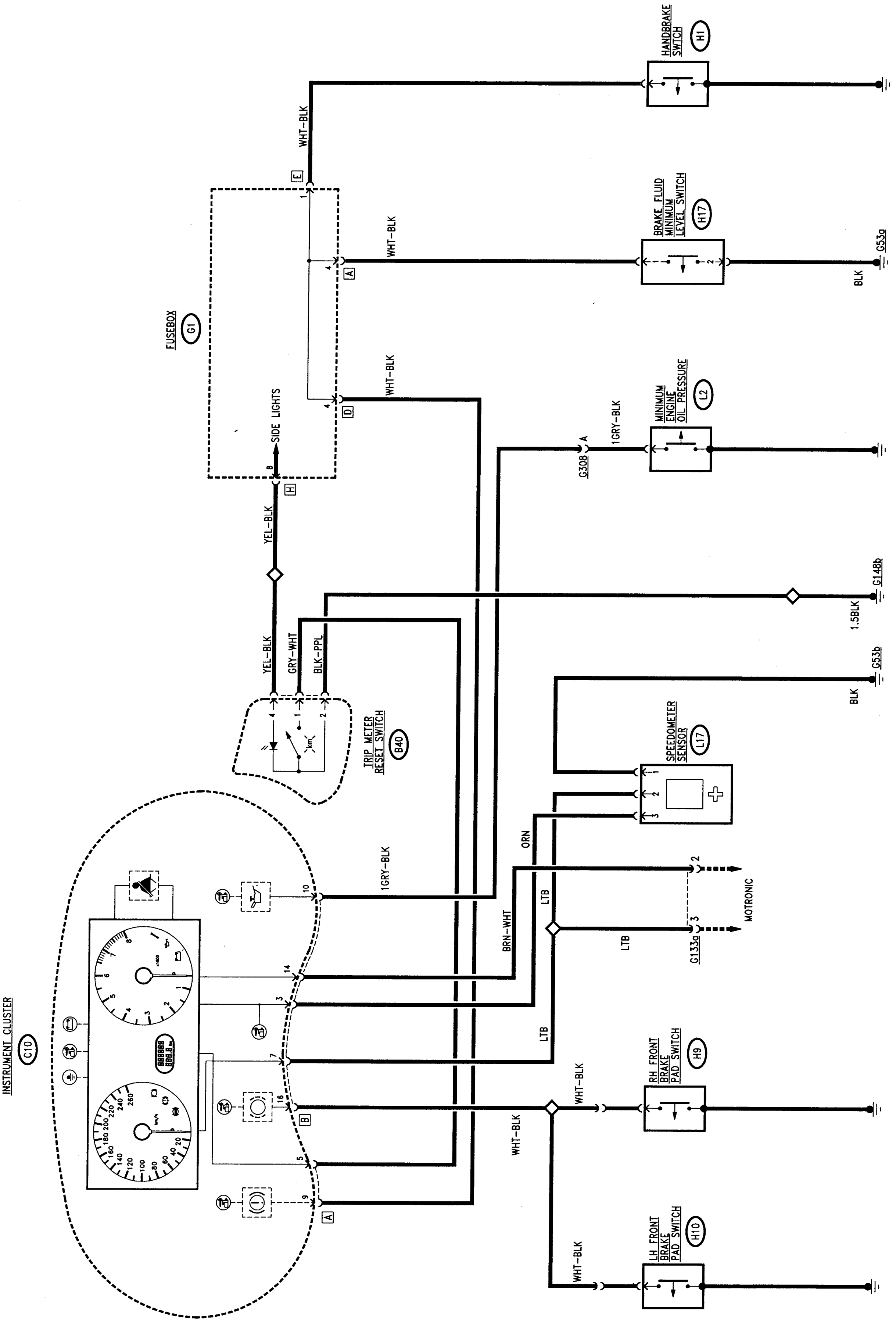

AUXILIARY PANEL: INDICATORS AND WARNING LIGHTS

The auxiliary panel **C18** contains two indicators with warning lights.

The **engine coolant temperature** is continuously shown by the special analogue indicator, and if the temperature is too high the **"maximum coolant temperature"** 🌡 warning light turns on.

The engine coolant temperature sender and maximum temperature warning light **L10** is fitted on the crankcase and comprises a thermistor which generates a signal proportionate with the temperature of the fluid and a contact which closes to earth when the fluid reaches an excessive temperature. The first signal is sent to panel **C18** pin 5, and the second one to pin 14.

The **fuel level** sender **L9** is a sensor submerged in the fuel tank, the resistance of which changes as the level in the actual tank changes.
An earth signal reaches pin 1 of **L9**, while a signal proportionate with the level is sent by pin 2, via the fusebox **G1**, to the instrument cluster **C10**, pin 7 of connector A.
Inside the cluster **C10** an electronic device processes this signal and sends two pieces of information to panel **C18**: the first proportionate with the **level**, from pin 13 of connector 8 of **C10** to pin 6 of **C18**; the second concerning the "**reserve**" from pin 18 of connector B of **C10** to pin 8 of **C18** ⛽

Wiring diagram

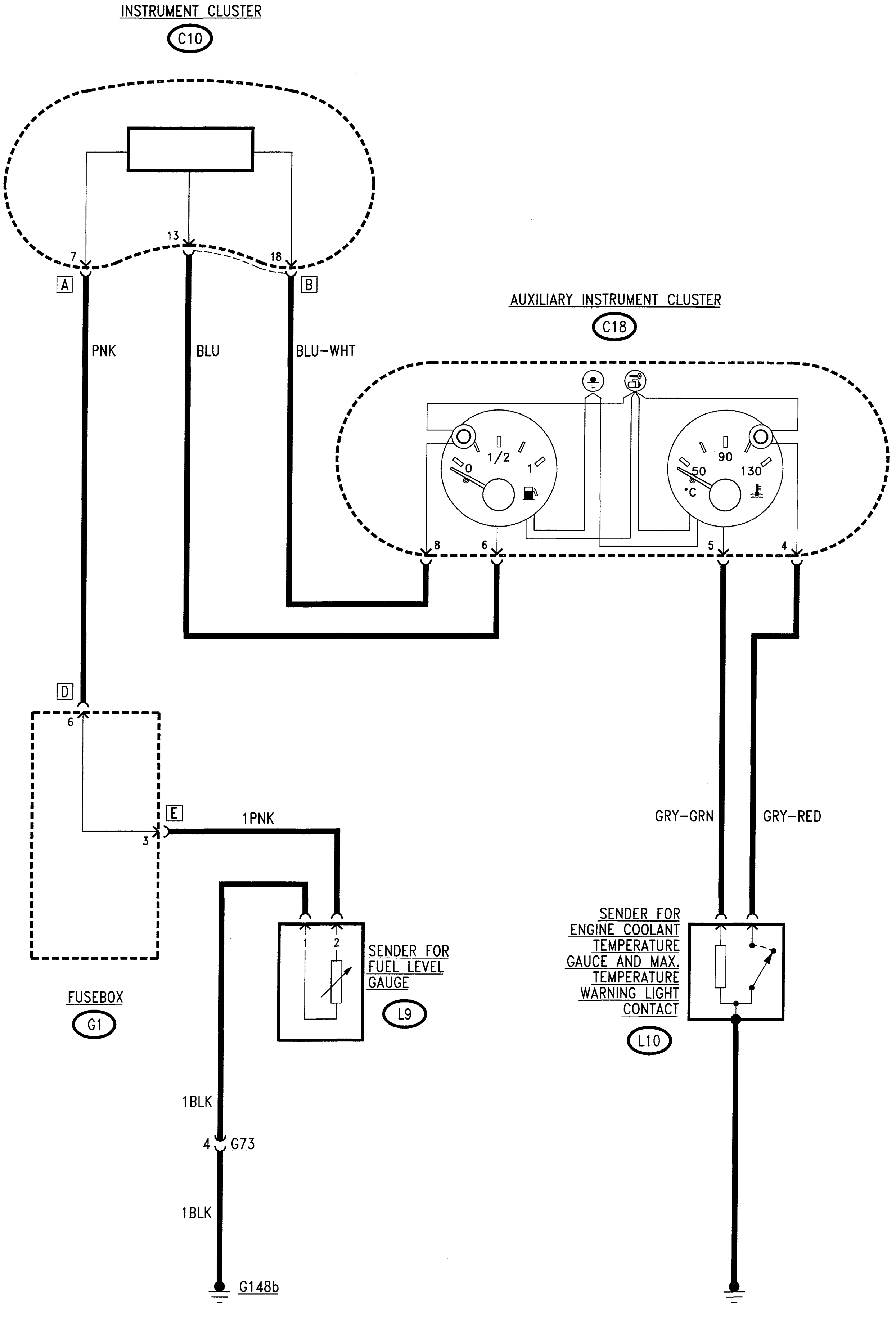

LOCATION OF COMPONENTS

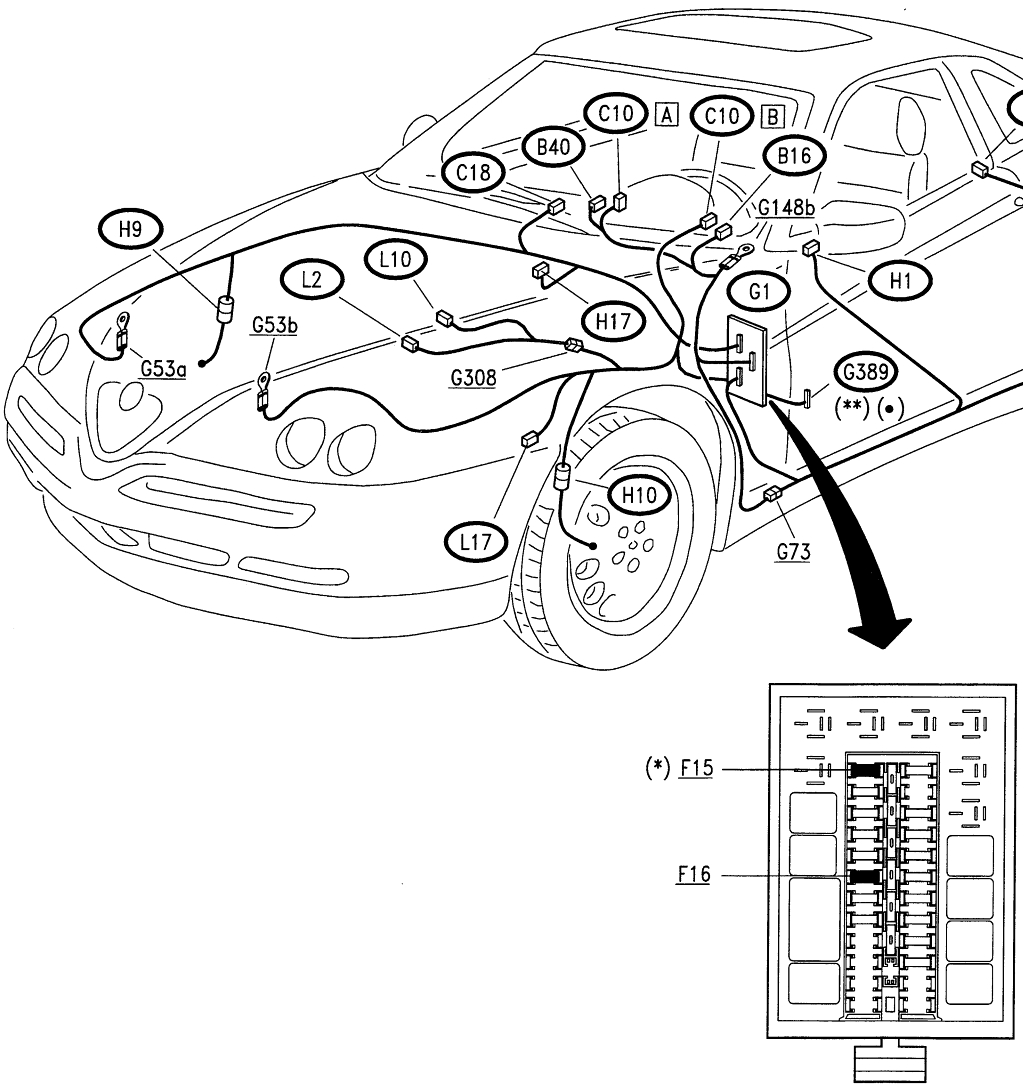

(*) up to chassis no.___
(**) from chassis no.___
(•) Red fuseholder

FAULT-FINDING TABLE

NOTE: The faults described below ("warning light not working") give a summary of all the cases in which the warning light is not operating correctly: e.g. the warning light turns on to indicate a failure and this failure does not exist, or vice-versa, a function has been switched on and the warning light fails to show it, etc...
The faults of warning lights not described here are to be found in the section concerning the system to which they refer: eg. for the high-beam warning light, see the section "Low and high-beam headlamps"

Fault	**Component to be checked**													
	F15 G389	F16	C10 (1)	C18 (2)	B16	B40	L17	L2	L10	L9	H17	H1	H9	H10
All lights on instrument panel are out	•	•	•											
Auxiliary panel off (not working)	•	•		•										
Main cluster fails to light up			•		•									
Auxiliary panel fails to light up			•	•	•									
Speedometer			•				•							
Rev counter			•											
Trip meter reset			•			•								
Clock		•		•										
Water t. gauge				•					•					
Fuel gauge and reserve warning light			•	•						•				
Handbrake & low brake fluid level warning light			•								•	•		
Brake pad wear warning light			•										•	•
Seat belts warning light(*)			•											
Min. oil pressure warning light			•					•						
Max. water t. warning light				•					•					

N.B. The seat belts warning light is NOT connected to the seat belt buckle: it does not turn on to indicate that the belt has not been fastened, but is turned on by a command from the electronic device of C10 for six seconds when the engine is started under all circumstances (seat belt fastened or not, engine running or not), and then goes off.

N.B.: Both the main cluster and the auxiliary cluster are made as a single component: all the connections inside are made on a printed circuit which connects the contacts of the instruments and of the various warning lights. **Repair operations are therefore not possible, not even changing bulbs, with the exception of the following:**

(1) Main instrument cluster: (C10)

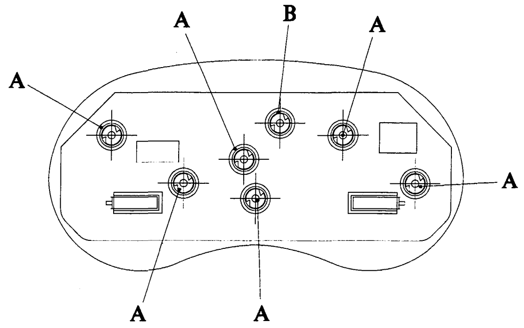

Replaceable:

- cluster lighting bulbs (**A**);
- high beam warning lights (**B**).

(2) Auxiliary instrument cluster: (C18)

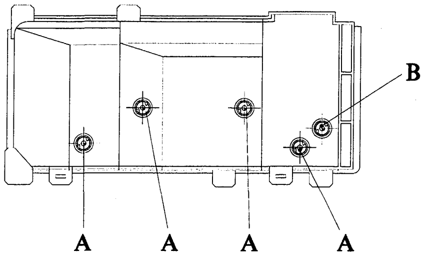

Replaceable:

- cluster lighting bulb (**A**);
- max. coolant temperature warning light (**B**).

CHECKING COMPONENTS

Speedometer sensor (L17)

3.0 V6

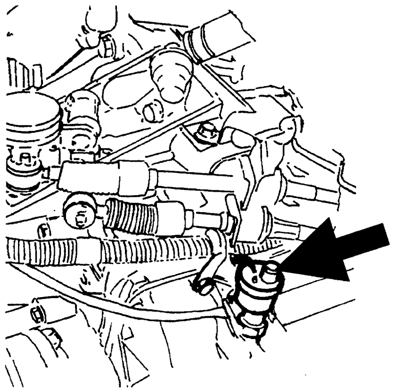

2.0 T.S. 16v

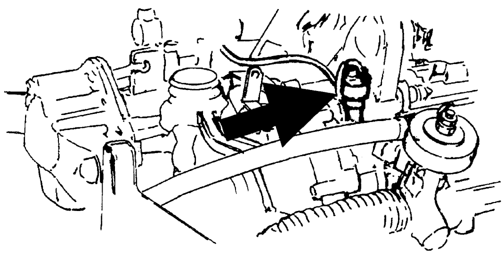

Wiring diagram:

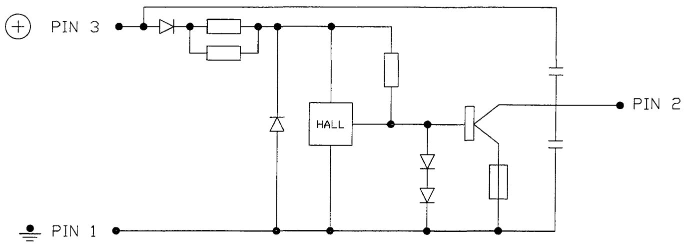

Output signal trend (with car on the move): voltage at pin 2: 16 pulses per turn

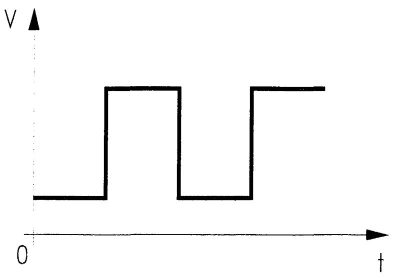

Sender for engine coolant temperature gauge and warning light contact max. temperature (L10)

3.0 V6

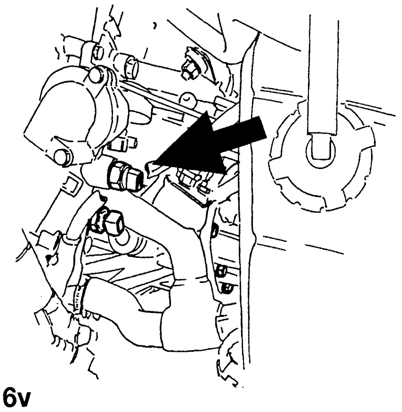

2.0 T.S. 16v

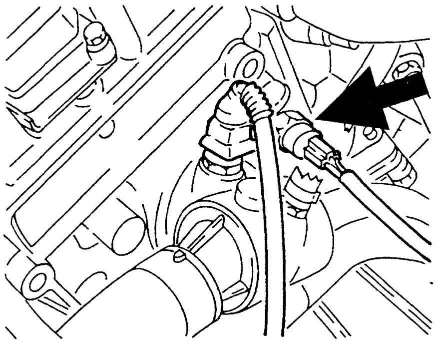

SPECIFICATIONS		
Sender		
Temperature °C	Resistance Ω	Type of fluid for check
60	525 ÷ 605	Water
90	195 ÷ 245	Water
120	82 ÷ 94	Glicerine
Contact		
	3.0 V6	**2.0 T.S. 16v**
Contact closes	115 ± 3°C	122 ± 2°C
Contact opens	≥ 102°C	112 ± 3°C

Fuel level sender (L9)

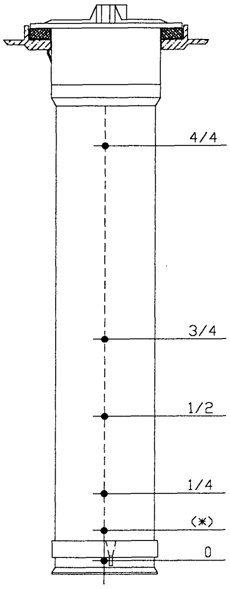

SPECIFICATIONS	
Level (see figure)	Resistance (Ω)
4/4	0 ÷ 6
3/4	59 ÷ 69
1/2	116 ÷ 126
1/4	186 ÷ 201
start of reserve (*)	262
0	295 ÷ 315

(*) 8.5 ÷ 10.5 litres

Min. engine oil pressure contact (L2)

3.0 V6

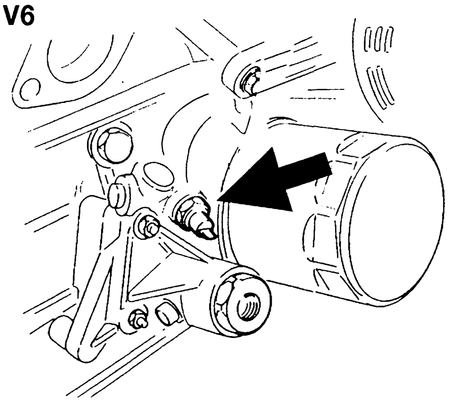

2.0 T.S. 16v

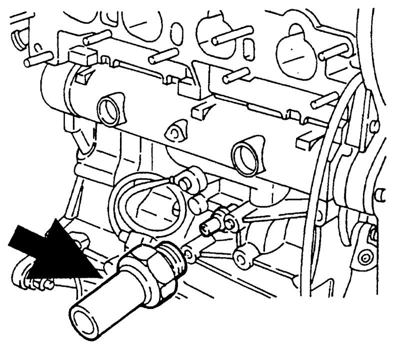

SPECIFICATIONS		
	3.0 V6	**2.0 T.S. 16v**
Conntact closes (pressure falliing)	0.15÷0.35 bar	0.2÷0.5 bar
Contact opens (pressure rising)	0.15÷0.35 bar	0.2÷0.5 bar

Min. brake fluid level switch (H17)

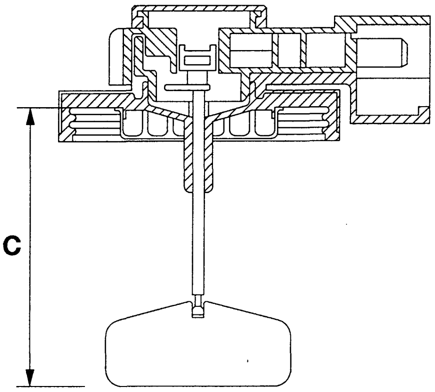

SPECIFICATIONS
The float closes the contact if dimension **C** (see figure) exceeds 40 ± 1 mm.

NOTE: to check operation of the switch simply press lightly on the upper end of the cover: this way the contact closes and it is possible to check whether the warning light is working properly

CAR RADIO

INDEX

WIRING DIAGRAM

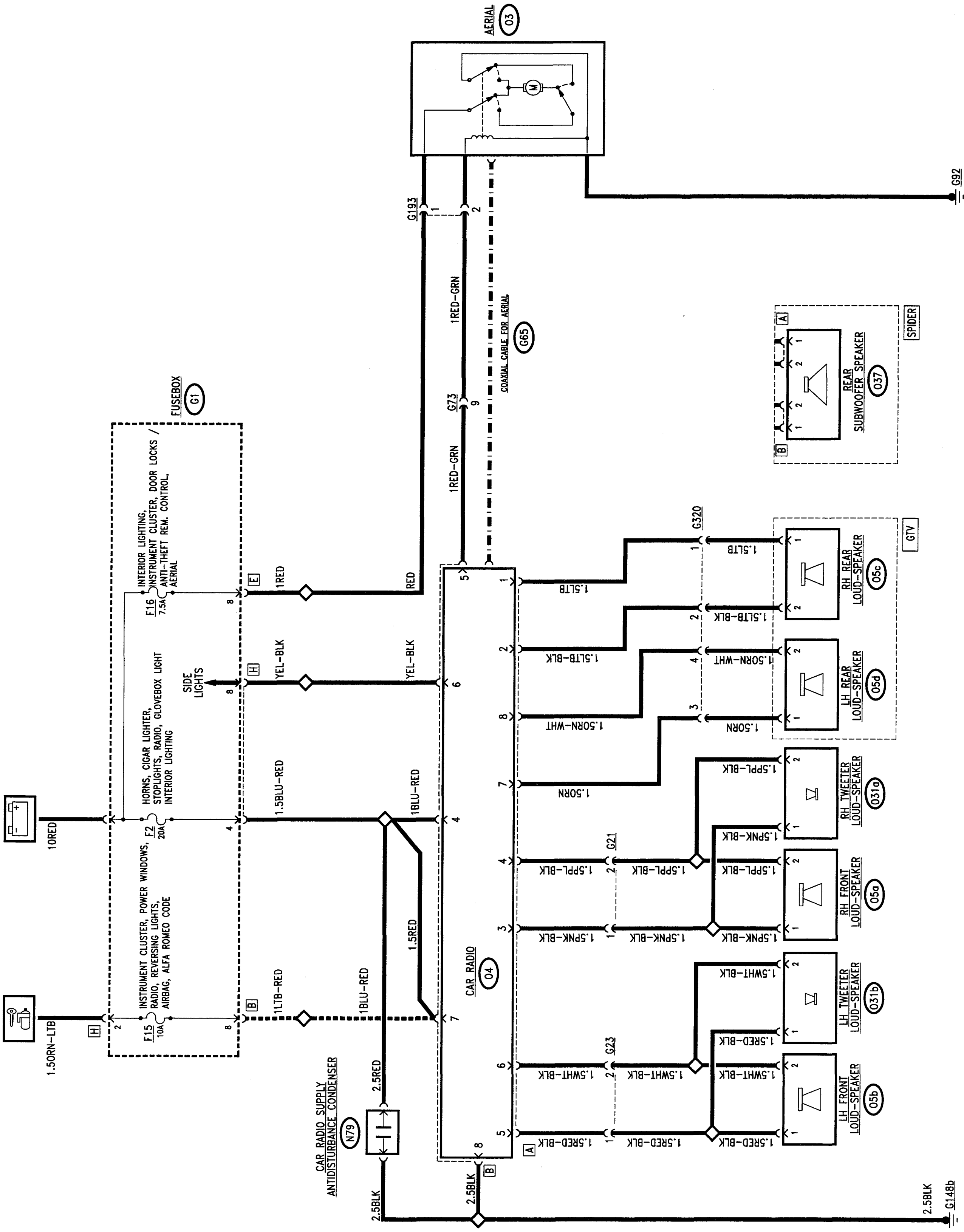

(*) up to chassis no.____

GENERAL DESCRIPTION

The car is fitted with a provision for the installation of **a car radio system complete with loud speakers.**

The system includes all the **wirings** necessary, already connected to the "base" wiring loom of the car, with **two** 130x180mm **front loudspeakers with 2 separate tweeters**, and **two** 165 mm, two-way **rear loudspeakers** (GTV) or a single 165 mm **rear subwoofer loudspeaker** (SPIDER).
The front speakers are located at the sides in the lower sections of the doors, with the tweeters on the pillar and the rear ones are on the shelf behind the seat (GTV) or in the centre behind the console (SPIDER).

The **electric aerial** is extended by a motor operated when the radio is switched on; it is located on the lefthand side of the boot lid and is connected with the radio by a coaxial cable.

The pre-installed supply for the radio is both key-operated and direct from the battery; this also makes it possible to memorise tuning, safety codes, etc. in the radio set.

In order to ensure very high sound quality under all conditions of use, a number of **anti-disturbance suppressors** have been fitted: this enables "electronic silencing" of the electric services that might interfere on the radio circuit:

- a suppressor in the boot lock;
- an aluminium sheet on the bonnet sound-deadening, earthed with a suitable braid;
- two condensers on the radio power supply.

As an optional extra the car can also fitted with a **fixed radio :** this system is composed of a **CLARION** radio with RDS coding, cassette player and CD loading control.

The radio has a removable front panel, as protection against theft and an internal antitheft code for further security.

FUNCTIONAL DESCRIPTION

The radio **O4** is supplied directly by the battery voltage via fuse **F2** of fusebox **G1**, at pin 4 of connector B (supply for memorising, etc.), while pin 7 receives the key-operated supply from fuse **F15** of **G1** (operation of the set - only up to chassis no.___ -).
Pin 8 of connector B is earthed.
Pin 6 receives the "sidelights on" signal used for lighting the radio controls.
The cables with the signals to the speakers leave from connector A of **O4.**
The aerial **A3** is connected to the radio by the special screened coaxial cable **G65**.
A signal also leaves pin 5 of connector B of **O4** which operates the motor of the electric aerial and extends it completely; when the radio signal ceases, the motor is operated in the reverse direction and the aerial is retracted completely.
The aerial **A3** is powered via the line of fuse **F16** of **G1**.
The suppressor **N79** is inserted on the radio supply. Other suppressors are to be found near the services that would be more likely to interfere on the radio circuit.

CLARION RADIO

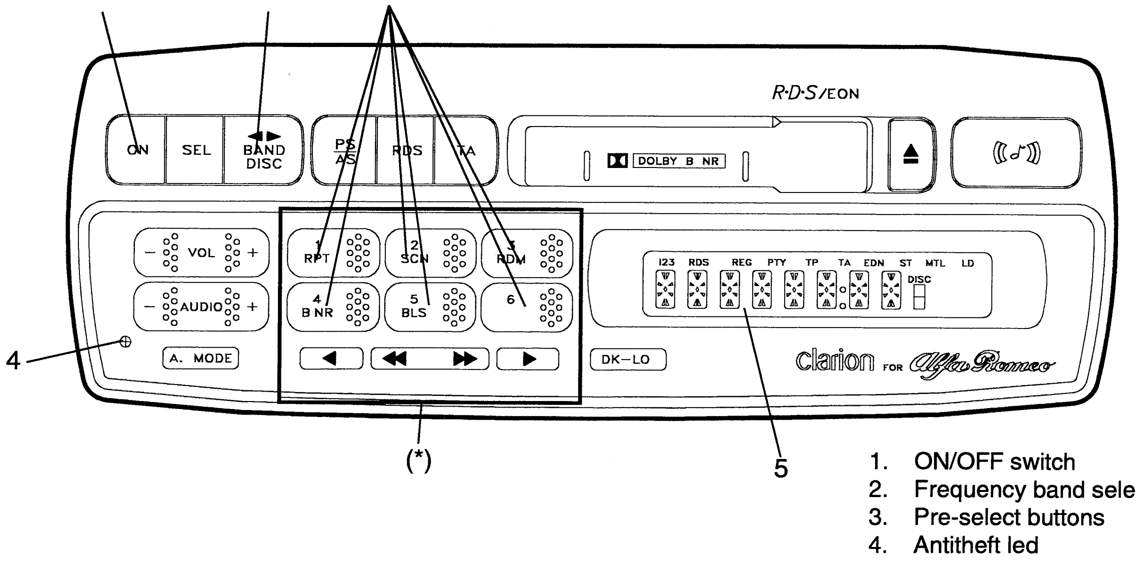

1. ON/OFF switch
2. Frequency band selector
3. Pre-select buttons
4. Antitheft led
5. Display

(*) Removable control panel

Antitheft system

The radio is fitted with a removable control panel (*) which must be removed when leaving the car to make the system unusable: removing the panel, the supply to the whole radio system is cut off and restored automatically when the panel is put back on again.

For further protection the set has a built-in anti-theft system with a secret code.

This system makes the set inoperative if for some reason it has been cut off: for example also if the battery is disconnected.

To make the radio work again it is necessary to enter the secret code given on the Customer Card, as follows:

- press the ON/OFF switch (1): the display will show the prompt "CODE IN";
- enter the secret code using the pre-select buttons (3); the number entered will be shown on the display;
- if the **number is correct** the radio turns on (the display will show the radio frequency);
- if the **number is wrong** the number itself stays on the display; press the BAND button (2) for at least 3 seconds and repeat the operation.

N.B. After three incorrect entries the radio will remain blocked for one hour; after a subsequent attempt it will be necessary to wait another hour and so on).

The antitheft indicator (4) signals the presence of this system when the car is not running.

OPERATION OF THE RADIO:

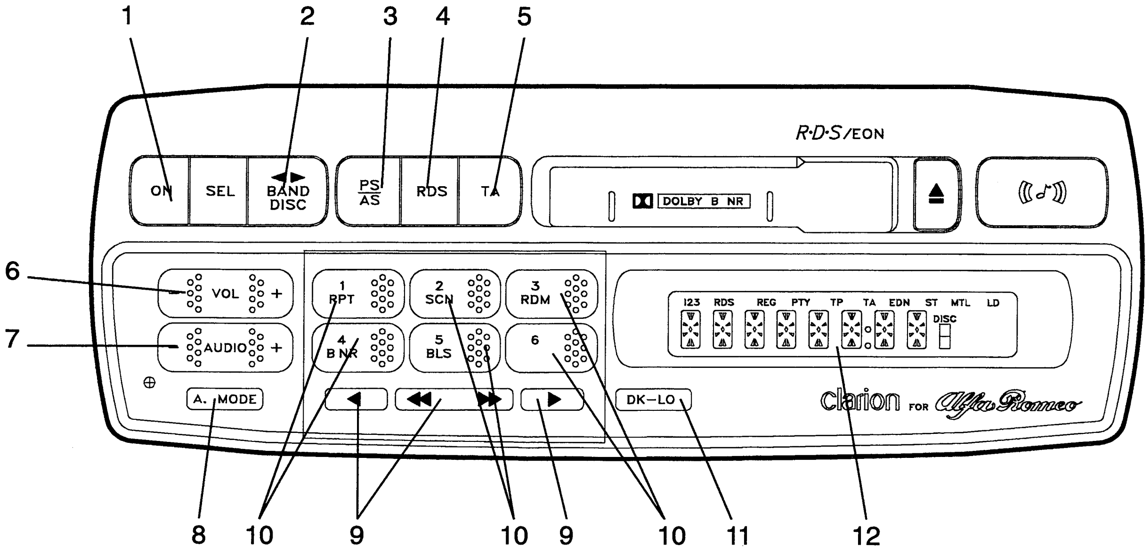

1. ON/OFF switch
2. Band selector
3. Preselector button, scan/automatic memorising off
4. RDS button
5. TA button (Traffic Announcements)
6. Volume adjustment buttons
7. Sound adjustment buttons
8. Sound mode selector switch
9. Tuner buttons
10. Pre-selector buttons
11. DX-LO tuner button
12. Display

MAGNETIC TAPE PLAYER OPERATION:

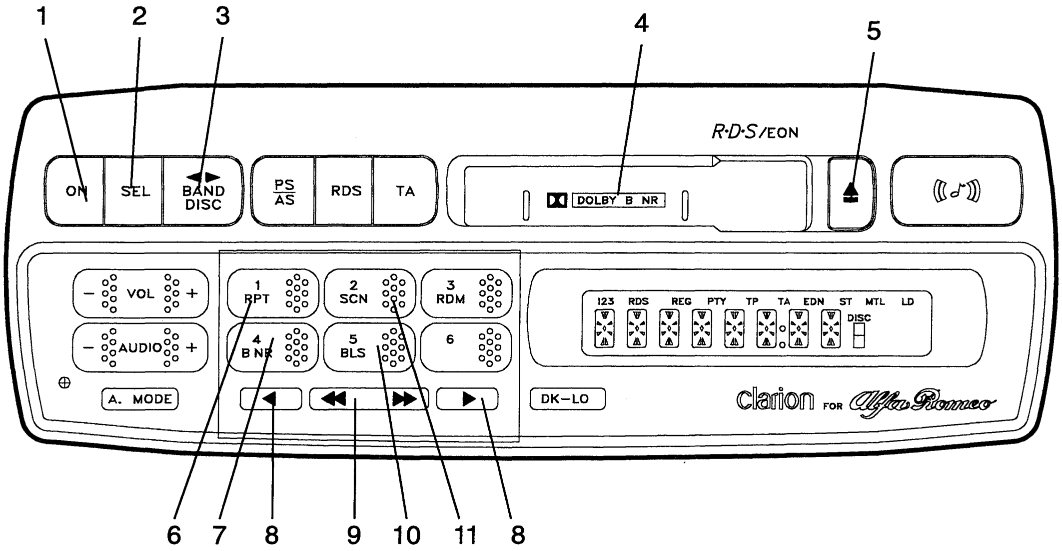

1. ON/OFF switch
2. Mode selector switch
3. Player switch
4. Cassette lid
5. Eject button
6. Repeat switch
7. Dolby switch
8. Fast forward buttons
9. APC buttons
10. Empty tape skip button
11. Tape scan switch

CD CHANGE OPERATION:

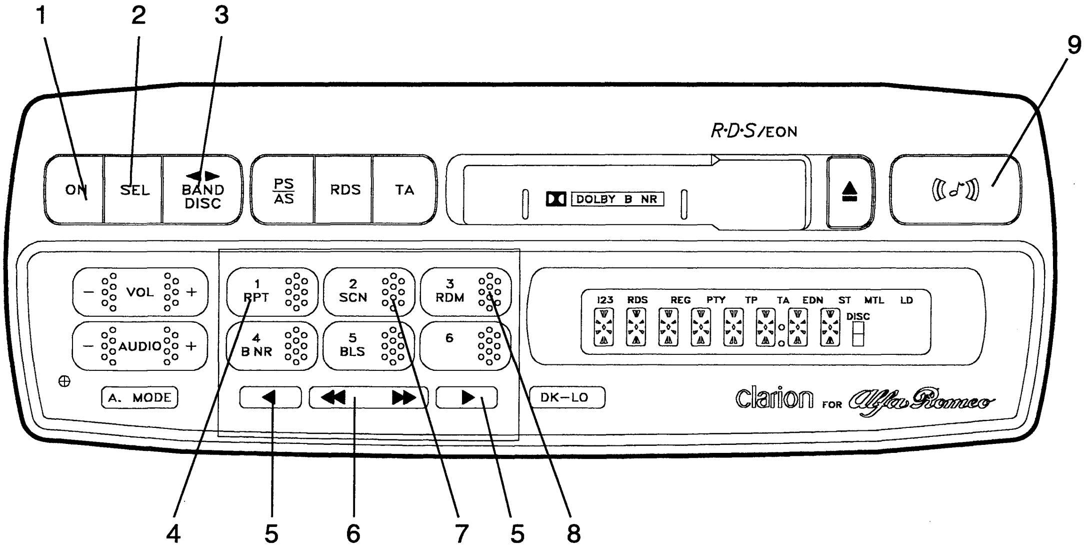

1. ON/OFF switch
2. CD mode selector switch
3. CD selector
4. Repeat switch
5. Fast rewind buttons
6. Track selector buttons
7. Scan switch
8. Random switch
9. Sound timbre switch

WARNING!
The CD CHANGE system contains a laser system and is classified as a "CLASS 1 LASER PRODUCT". For correct use of the set, the Owner's Manual should be read carefully. Do not open the casing to avoid direct exposure to laser beams.
THE USE OF CONTROLS OR ADJUSTMENTS OR THE APPLICATION OF PROCEDURES OTHER THAN THOSE SPECIFIED IN THE OWNER'S MANUAL MAY RESULT IN EXPOSURE TO HARMFUL RADIATIONS.

LOCATION OF COMPONENTS

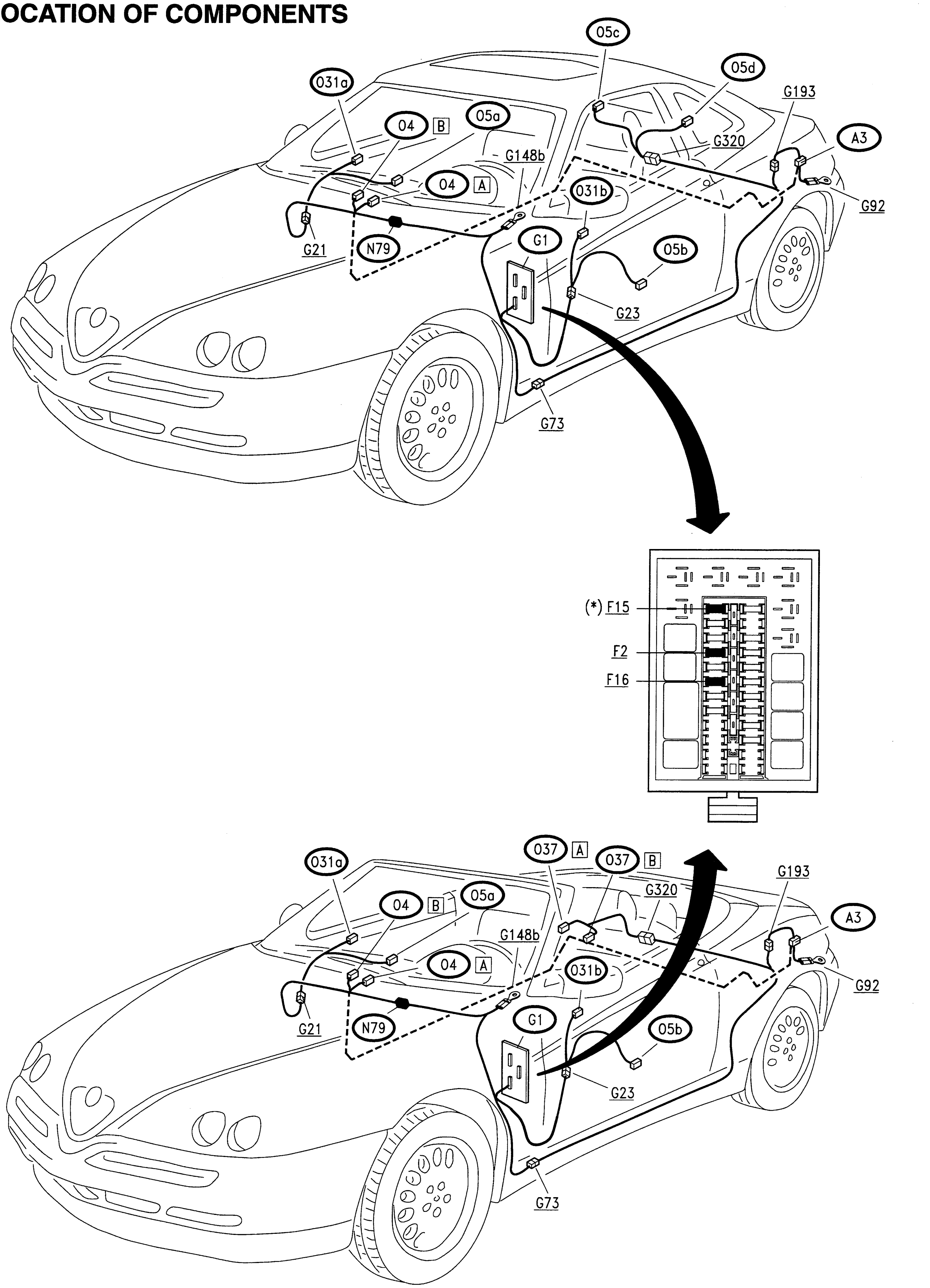

– – – – coaxial aerial cable

(*) only up to chassis no.___

FAULTFINDING TABLE

Fault	Component to be checked										
	F16	F2	F15 (*)	O4	O5a-O31a	O5b-O31b	O5c	O5d	O37	G65	A3
Radio power failure (1)		•	•	•							
Poor reception				•						•	•
Aerial sticks in	•			•							•
Front speaker/RH tweeter not working				•	•						
Front speaker/LH tweeter not working				•		•					
RH rear speaker not working (GTV)				•			•				
LH rear speaker not working (GTV)				•				•			
Rear speaker not working (SPIDER)				•					•		
Interference from other electric services (•)				•						•	

(*) up to chassis no.___

(•) If the system hisses or other signals indicating interferences, check that the connection to the wiring loom is correct and that the suppressor condensers **N79** locate near the radio and **N53** near the boot lock are working properly; also check that the sound deadening on the bonnet is fastened correctly.

CHECKING COMPONENTS

CAR RADIO (O4)

Further details on the features and operation of the radio are given in the "INSTRUCTIONS FOR USE" provided with it.

Also in the event of malfunctions of certain specific functions of the radio, consult the "INSTRUCTIONS FOR USE". Additionally:

- Also check that the additional fuse (10A) on the back of the radio is intact (pos. 5 of illustration); change it if necessary.
- In the event of hissing noises or other signs of malfunctioning of the system due to interferences, check that the anti-disturbance condensers **N79** near the radio, and **N53** in the boot lock are correctly connected and working properly.

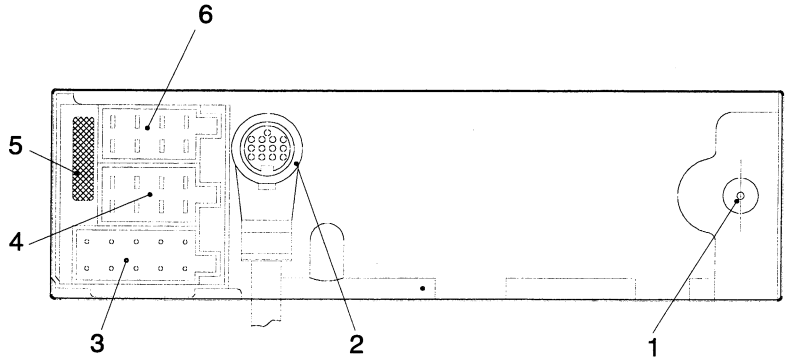

rear view of connectors side:

1 - aerial coaxial cable connection socket **G65**
2 - connector for connecting C.D. player
3 - unconnected connector
4 - connector (O4) A
5 - additional fuse (10A)
6 - connector (O4) B

Coaxial aerial cable (G65)

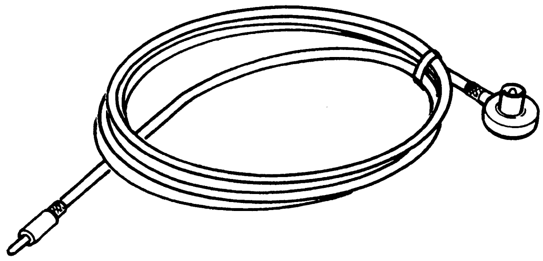

SPECIFICATIONS	
Characteristic impedance	150 Ω ÷ 10%
Resistance of internal wire	≤ 1 Ω/m
Total capacity (measured on the plug-radio side)	50 ÷ 90 pF

DOOR LOCKING SYSTEM

INDEX

WIRING DIAGRAM

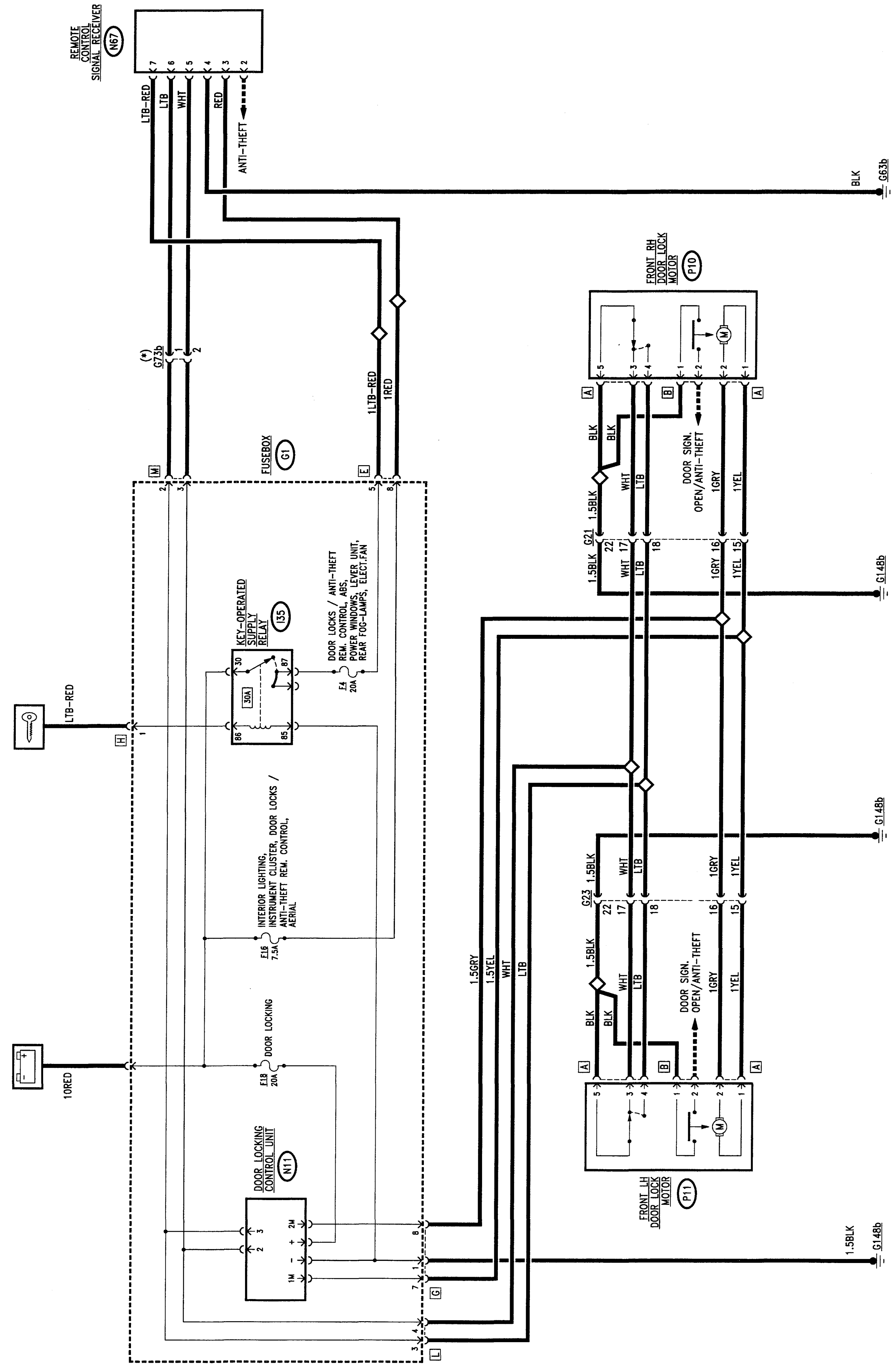

(*) from chassis no.____

GENERAL DESCRIPTION

The door locking system comprises an electronic control unit which controls and commands the door locks; each lock comprises a gear motor for locking/releasing the door lock, a control switch and a switch signalling that the doors is open.

The latter is used by the Instrument cluster (see "Instrument cluster") and by the alarm system (see "Alarm system").
The gear motors are both operated simultaneously by acting on one of the control switches either from inside through the knobs or from the outside using the key.

NOTE: the control unit logic comprises a series of check and security operations:

- if the power supply is cut off, the locked doors are not released: the doors will only open when the supply has been restored;
- during locking, if one of the control switches is mechanically impeded, this function is cut off;
- if a failure causes the supply to the door motors to last for over 4 seconds, this supply is cut off;
- if several opening/closing commands are received by the control unit in quick succession from the key, only the last one to be sent will be considered;
- in the event of contrary commands (e.g. one with the key and one with the inside knob) the control unit will oscillate: oscillation ends after 8 consecutive commands.

N.B.: In the **versions with alarm system** the door locking device is also operated via the remote control which works in the same way as manual locking/releasing. For further details see "Alarm system".

FUNCTIONAL DESCRIPTION

The door lock control unit **N11** is located in fusebox **G1**. It is supplied by the battery voltage (pin +) through fuse **F18**, while it is connected to earth (pin -).

It receives an earth signal at pins 2 and 3 which represents the locking or release command leading from the control switches of the right front lock **P10** and the left one **P11**:

- **locking signal**: if the earth passes from pin 2 to pin 3;
- **releasing signal**: viceversa from pin 3 to pin 2.

The logic of the control unit **N11** carries out the checks mentioned previously and sends the locking signal (pin 2M: 12V and pin 1M: earth) or releasing signal (pin 1M: 12V and pin 2M: earth) simultaneously to the door lock gear motors **P10** and **P11**.

LOCATION OF COMPONENTS

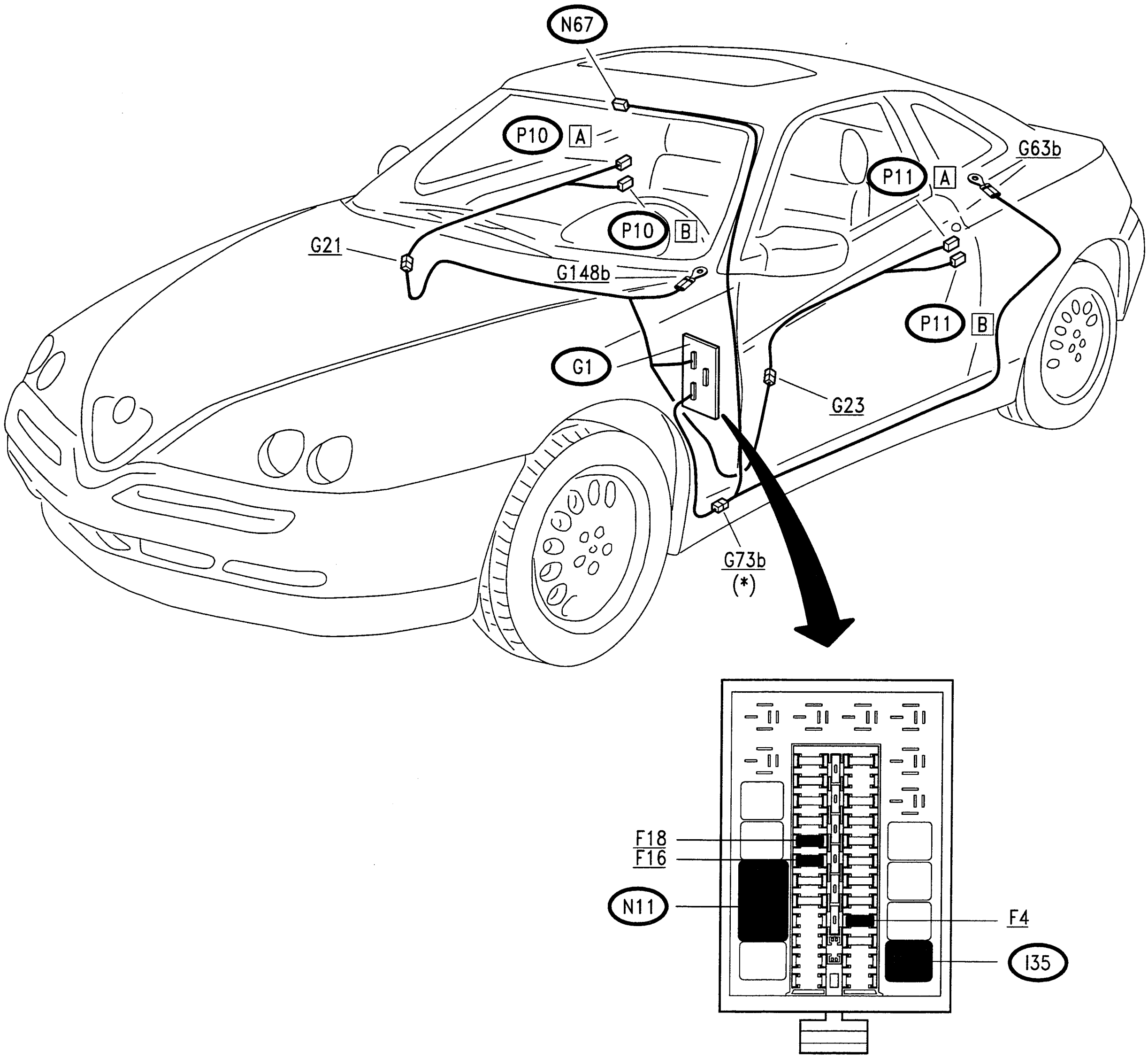

(*) from chassis no.___

FAULTFINDING TABLE

CAUTION: In the event of a mechanical failure on one of the door lock devices integrated with the lock, the control unit safety logic makes **the lock itself stay open**. In the unlikely event that the doors stay shut and locked, it is however still possible to open the lock manually: using the key from outside or raising the knob from inside.

N.B.: cutting off the supply does not "unlock" locked doors!! Locked doors will only open when the supply is received again.

Failure	Component to be checked						
	F4	F16	F18	N11	P10	P11	N67
Whole door locking system			•	•			
Door remote control not working	•	•					•
LH front door						•	
RH front door					•		

CHECKING COMPONENTS

Door locking control unit N11

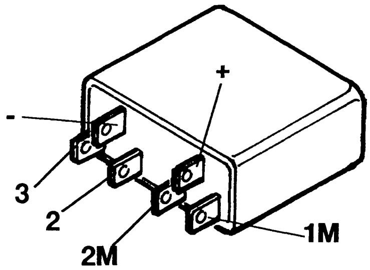

Checking the device: **TEST A**

Door lock gear motor P10 - P11

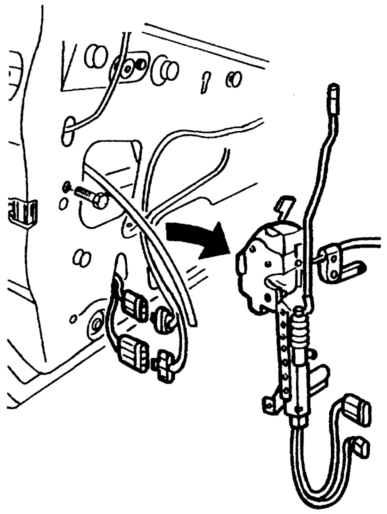

SPECIFICATIONS	
door closed	continuity between pin 1 and 2 of connector B
door open	a.c. between pin 1 and 2
lock command	cuts off continuity between pin 5 and 3 and establishes it between pin 5 and 4 of connector A
release command	cuts off continuity between pin 5 and 4 and establishes it between pin 5 and 3 of connector A
motor operation	applying 12V between pins 1 and 2 of connector A

CHECKING THE DOOR LOCK CONTROL UNIT N11

TEST A

TEST PROCEDURE	RESULT	CORRECTIVE ACTION
A1 CHECK VOLTAGE – Disconnect device **N11** and check on the base of fusebox **G1:** 12V between the + and - pins of **N11**	OK ▶	Carry out **step A2**
	~~OK~~ ▶	Check fuse **F18** of fusebox **G1**. Check that **G1** is connected to earth: from pin 1 of connector G towards earth **G148b**
A2 CHECK LOCK/RELEASE COMMAND – Operate the door locking or release and check that an earth passes from pin 2 to pin 3 of **N11** or viceversa	OK ▶	Insert device **N11** on the base of **G1** and continue with **step A3**
	~~OK~~ ▶	Restore the wiring between **N11** (**G1**) and the door lock motor (**P10** RH or **P11** LH) or change the latter
A3 CHECK LOCK/RELEASE ACTUATION – Operate the door lock or release device and check for 12V between pins 7 and 8 of connector G of fusebox **G1**	OK ▶	DEVICE **N11** IS WORKING PROPERLY: Check the door lock motor **P10** or **P11** and the corresponding connections
	~~OK~~ ▶	Change device **N11**

ALARM SYSTEM (V.A.S.)

INDEX

This section documents the alarm system with INFRARED CONTROL.
For the version with RADIO FREQUENCY CONTROL, refer to the special publication "ALARM SYSTEM" PA500500000000.

GENERAL DESCRIPTION

Upon request the car is fitted with an alarm system combined with the door locking system with remote control.

The Vehicle Alarm System V.A.S. is a system which offers perimeter protection: it is able to survey the state of the doors and bonnets; the system is controlled by a single compact unit which comprises the electronic control unit and siren.

The system is "universal" as it offers the possibility to configure the control unit according to the requirements of the different countries (alarm sound level and types of light flashing for activation/deactivation.

In addition, a sophisticated self-diagnosis system controls:

- intermittent and permanent errors or faults;
- number of activations of the system and the number of alarms sounded;
- specific faults of the control unit;

COMPONENTS

The **transmitter**, protected by a shockproof rubber cover, comprises a printed circuit and an infrared ray sender; it is battery-powered (2 3V lithium batteries) and, each time the control button is pressed, it sends a beam of rays in the direction in which it is pointed. This infrared ray device continuously transmits the code for the whole time in which the button is pressed. An indicator (led) turns on each time a signal is emitted.

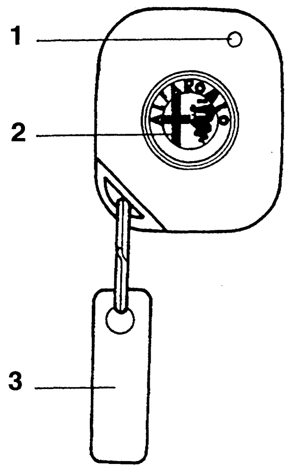

Transmitter

1 - Led
2 - Control button
3 - Transmitter code label

NOTE: the label is to be stuck in the speciai space provided on the CODE CARD supplied with the car.

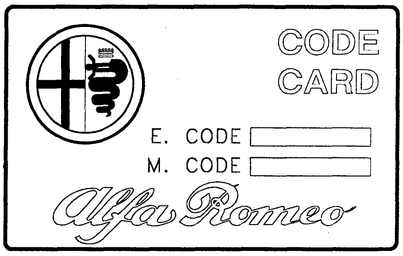

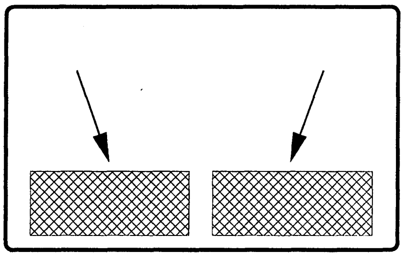

The **receiver**, incorporated in the front ceiling lamp, is an electronic device that picks up the infrared ray signal through a half-ball protruding from the receiver. There is also a led next to the receiver which lights up when the signal is received, while a special button makes it possible to memorise the secret control code (see "Programming the transmitter").
The special half round shape makes it possible to capture the signal through 360 degrees, provided that the transmitter is no more than 5 metres away.

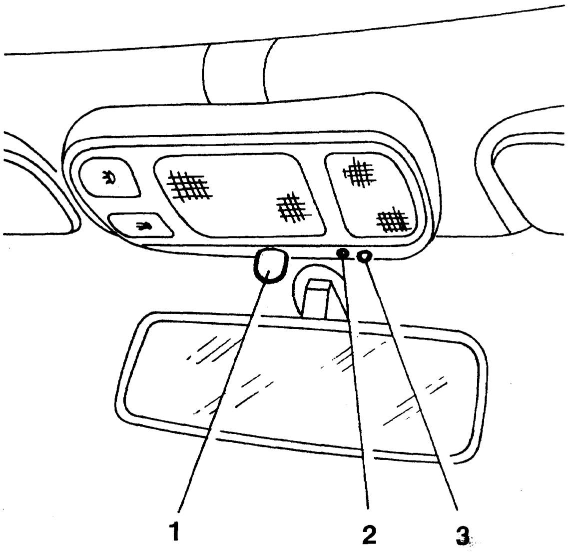

Receiver

1 - Half-ball receiver
2 - Memorising button
3 - Luminous led

The **electronic control unit** also comprises the compact **siren** : it is to be found inside the engine compartment.
The siren operates at different intensity depending on the programming for the different countries (see description below).

The lock for the emergency key for deactivating the system is located on the actual control unit, thus access to it is quick and easy.

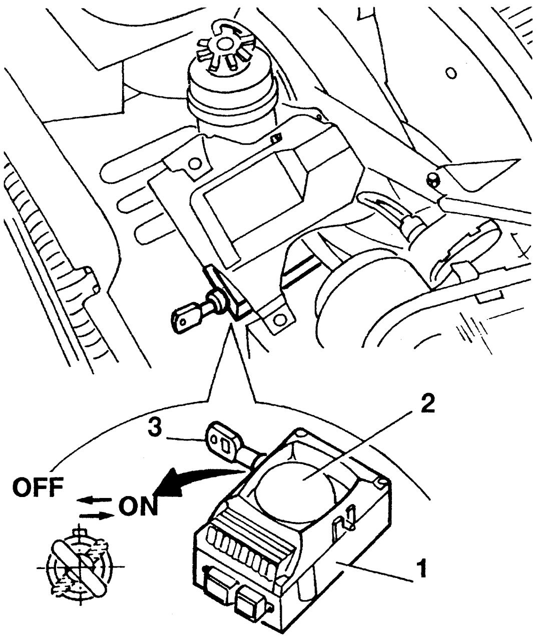

1 - Electronic control unit
2 - Siren
3 - Emergency key

For the control of the doors, bonnet and luggage compartment the same switches as for the door locking system and for the warning lights on the instrument cluster are used (see sections "Door locking system" and "Instrument cluster").

The system **signalling led** (red, of the high efficiency type), is located on the dashboard, next to the fog lamp and fog guard switches, and it signals the state of the system and any faults (see following description).

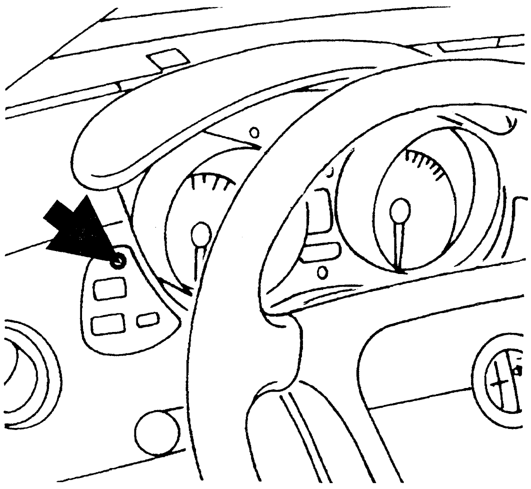

OPERATION

ENABLING/DISABLING

It is only possible to enable the alarm when the ignition key is in the STOP position.

ENABLING is possible by pressing the button on the transmitter.

DISABLING is obtained by pressing the same button once again.

To obtain the most efficient switching, press the button until a visual and acoustic signal are noted (feedback).

N.B. The system is protected against unauthorised recording of the secret code.

Enabling

Press the button whilst pointing the transmitter towards the receiver dome. Acoustic and optical signals will be noted (for the markets/versions foreseen).

Disabling

Press the button pointing the transmitter towards the receiver dome.
Also for disabling acoustic and optical signals will be noted (for the markets/versions foreseen).

COMPLETE DEACTIVATION OF THE SYSTEM

If the batteries of the transmitter are flat or the system is not working properly, the alarm system can be deactivated using the emergency key on the control unit.
When the car is delivered this emergency key must be in the "ON" position.
Turning the key to "OFF" the system is deactivated completely. In the specific version for some markets, only the batteries inside the control unit/siren are deactivated, leaving the alarm system activated as it is still supplied by the car battery.
With the key at "OFF" the surveillance of the cable cutting/battery disconnection is no longer activated.

Set this key to "OFF" and disconnect the battery cable if the vehicle is left unused for long periods (over 1 month).

"SURVEILLANCE" MODE

During the "surveillance" mode (car closed and alarm activated) the dissuasion led flashes at 0.8 Hz, in this condition, the system;

– checks the doors, bonnet and boot;

- checks that the battery positive terminal is connected and that the leads are intact;
- checks that the ignition key is not being tampered with;

ALARM MODE

The system enters the alarm mode when one of the surveillance sensors detects an abnormal situation.

The alarm mode activates the siren and hazard warning lights, for variable lengths of time depending on the versions/markets.

The alarm ceases:

- with a command from the transmitter (deactivation);
- 25 min. after the last activation of the alarm mode;
- by turning the emergency key.
  (N.B.: in this case the alarm activated condition is stored in the control unit memory).

SELF-DIAGNOSIS

UPON ACTIVATION the system carries out self-diagnosis (indicated by the flashing of the LED at 4 Hz). If a fault is found the LED will identify it through a special flashing code as shown in **table 1**.

When a door or bonnet/boot is found to be open/faulty the corresponding sensor is cut off by the surveillance mode and a beep signal is given one second after they are activated.

Type of flashing	Meaning
8 Hz, duration 2,5 sec.	Door/bonnet/boot left open or faulty switch
16 Hz, duration 2,5 sec.	Fault in electronic control unit

Table 1: Self-diagnosis

WHEN THE ALARM IS DISABLED the dissuasion LED flashes to indicate which of the sensors triggered an alarm during surveillance (see **table 2**).

N.B.: the signal is cancelled turning the ignition key to MARCIA

N. Flashes*	Component with alarm
1 Flash	Right door
2 Flashes	Left door
3 Flashes	-
4 Flashes	-
5 Flashes	-
6 Flashes	Bonnet
7 Flashes	Boot
8 Flashes	Key-operated supply cut off
9 Flashes	Battery supply cut off
10 Flashes	At least 3 causes of alarm contemporaneously

Table 2: Signals indicating alarms

(*) If there is more than one, the alarm codes are presented in sequence.

The flashes last for 0,5 sec. with an interval of 1.5 sec. between them.

In addition to the automatic SELF-DIAGNOSIS described here, it is also possible to check the system by MANUAL DIAGNOSIS (see "FAULT-FINDING).

PROGRAMMING THE TRANSMITTER

Upon leaving the factory the receiver contains a "UNIVERSAL" code which can be controlled by a "UNIVERSAL" transmitter for inspection and moving the car in the factory. On delivery it is therefore necessary to reprogramme the receiver with the transmitter code so that only the owner will have authorised use of the vehicle.

There are two possible programming modes:

- **SIMPLIFIED PROGRAMMING;**
- **PROTECTED PROGRAMMING;**

N.B. : The memorising of a transmitter must be carried out with:

- **the alarm system deactivated (by remote control): the signalling led on the dashboard must be off;**
- **the emergency key at "ON";**
- **the ignition key at STOP.**

Each transmitter has a sticker (*) with a four-figure number to protect the system from unauthorised programming (protected programming) which must be removed by the customer on delivery of the vehicle and kept in a safe place.

NOTE: this sticker can be kept on the back of the Code Card

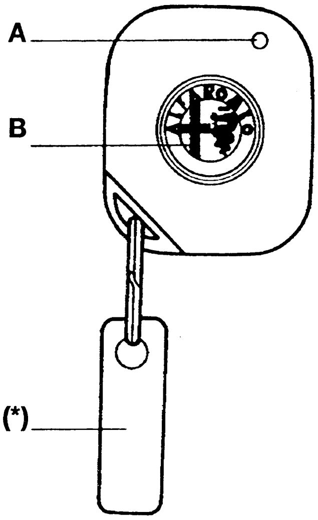

Transmitter
A - Luminous led
B - Control button
(*) - Code label

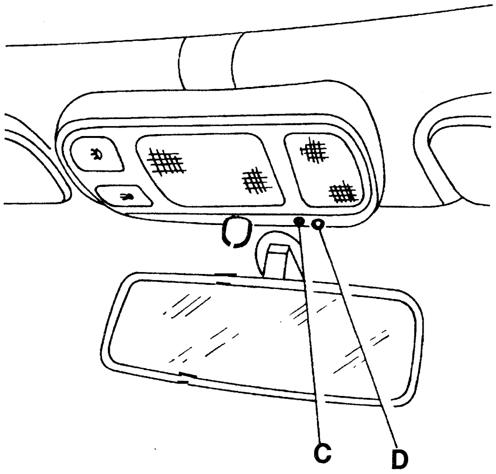

Receiver
C - Luminous led
D - memorising button

SIMPLIFIED PROGRAMMING

Simplified programming is for use when no remote controller data has previously been entered in the memory and the system needs to accept all transmitters, i.e. when the memory has not yet been "locked" by protected programming.

In this programming mode as many codes as required are recognised, but only the last four are memorised.

Proceed as follows:

1. press button **D** on the ceiling light: LED **C** flashes; **NOTE**: if the led fails to flash, check that the alarm is deactivated or that the receiver on the ceiling light is powered correctly.
2. keeping the receiver button **D** pushed, press the transmitter button **B**, point it towards the receiver, but at least 20 cm from it: the led of transmitter **A** must flash once;
3. LED **C** light continuously indicating that the code has been memorised: at this point the operator can release button **D** to end programming.

In the 3 sec. following the release of the button, it is possible to programme the country code to suit the country in which the car will be used.

This is performed by pressing in quick succession the button of the receiver **D**, as shown in **table 3**.

If the button is not pressed, the country code defaults to E.E.C.
In the event of further memory storage operations, the last one remains in the memory.

If the procedure has been carried out correctly, the LED on receiver **C** will flash 6 times, indicating that the code has been memorised on both the ceiling light receiver and in the control unit, if not, LED **C** will flash 18 times and it will be necessary to repeat the entire procedure starting from point 1 of simplified programming, after checking that the alarm control unit and ceiling light are connected correctly.

No. of presses	Country
1	ITALY
2	GERMANY
3	FRANCE
4	SWITZERLAND
5	UNITED KINGDOM
6	HOLLAND
7	USA
8	EEC
9 / 10	Others

Table 3: Country Codes

As it is not easy to carry out this procedure in such a short time as 3 seconds, a **different procedure for entering the Country code** is recommended. To do this, proceed as follows:

- open the bonnet;
- turn the ignition key from MARCIA to STOP: within 15 seconds the bonnet button must be pressed 7 times in quick succession in less than 10 seconds; 5 beeps will indicate entry in MANUAL DIAGNOSIS (see FAULT-FINDING). During these 5 beeps press the bonnet switch once again. A last long beep will signal the acceptance of this new operation;
- keep the button pressed throughout the duration of the long beep. The latter signals entry into the country programming mode, thus the possibility to enter the country code;
- release the switch and press it within 10 seconds the number of times mentioned in table 3 to select the operating mode of the country required (each press will have a feedback beep).

N.B. To enter another remote control repeat the operations from point 1 of simplified programming, provided that the memory has not been "locked", as described below.

PROTECTED PROGRAMMING

To prevent unauthorised persons from entering their own code, it is necessary to protect ("lock") the memory; this operation takes place automatically after 256 activations/deactivations of the alarm system, or by entering the password (locking the memory manually).

Locking the memory manually

Protected programming can be entered by the Owner by entering the Password (four digit code on the transmitter label) before 256 activations/deactivations (for example on a new car during pre-delivery, when all the codes of the remote controls given to the Customer have been entered).

To enter the Password:

1. press the button on receiver **D** for appr. 2 seconds; LED **C** will flash for the whole time in which the button is pressed.
2. release button **D**: after appr. 2 seconds LED **C** will flash once indicating the possibility to enter the first digit of the password.
3. press the button of the receiver **D** the number of times corresponding to the first figure of the password (for example if the Password is 5.2.0.3. press 5 times). Each time the button is pressed LED **C** lights up briefly to confirm;
4. after appr. 2 seconds from the last press on button **D** (the fifth in the example) led **C** will flash again to ask for the next figure;
5. proceed as described above for all the other figures.
   NOTE: When the password (see example) contains a "0" there is no need to press button **D**, simply wait for the request for entry indicated by the next flash.

When the four figures of the Password have been entered, the LED on the receiver **C** can behave as follows:

- **it does not light up**: this means that the Password has been entered correctly and that it belongs to one of the codes of the remote controls memorised;
- **it stays on continuously** for several seconds meaning that the password has not been entered correctly or it does not correspond to any of the remote controls memorised. In this case, when LED **C** goes off, the correct Password should be entered again beginning from point 1.

With the correct entry of the password the memory is "locked".

From now onwards, if attempts are made to memorise a new remote control, after transmitting the new code, LED **C** on the ceiling light will stop flashing to indicate that the operation is unsuccessful.

In this case, to enter the code of the new remote control the memory has to be "re-opened" by the following procedure.

Memory opening

When the memory has been "locked" further remote control codes are entered by "manual memory opening".

The memory is opened as follows:

1. press the button on receiver **D** for appr. 2 seconds; LED **C** will flash for the whole time in which the button is pressed;
2. release button **D;** after appr. 2 seconds LED **C** will flash once indicating the possibility to enter the first digit of the password.
3. press the button of the receiver **D** the number of times corresponding to the first figure of the password (for example if the Password is 5.2.0.3. press 5 times). Each time button **D** is pressed LED **C** lights up briefly to confirm;
4. after appr. 2 seconds from the last press on button **D** (the fifth in the example) the led will flash again to ask for the next figure.
5. proceed as described above for all the four figures. It should be noted that when the password (see example) contains a "0" there is no need to press the button, simply wait for the next request.

When the Password hase been entered, the LED **C** can behave as follows:

- **it stays on continuously** meaning that the password has not been entered correctly or it is not present in the memory. Repeat the memory opening operations (with the correct password) from point 1;
- **it starts flashing**; this means that the password has been entered correctly (memory opening) and that it belongs to one of the remote control codes memorised.

At this point to memorise the code of a new transmitter proceed as described at point 1 of "Simplified programming".

When the new remote control has been entered the memory returns to the "locked" mode.

N.B.:

The alarm control unit is activated (alarm enabling/disabling) by the receiver with the code of the last transmitter memorised correctly (with the key at "ON").

In fact this code is memorised simultaneously in both the receiver and electronic control unit.

Any other transmitters memorised previously in the receiver, though they possess different codes, they use the code of the last transmitter memorised to command the control unit.

If previously the receiver and control unit were controlled regularly by a transmitter and subsquently another transmitter is memorised with the emergency key at "OFF", the code of this transmitter is memorised by the receiver, which duly controls central door locking, whereas the code of the first transmitter remains in the control unit.

Under these conditions, the system can no longer be controlled by the transmitter, which can only open/close the doors.

Simply setting the emergency key to "ON" and memorising yet another new transmitter, the problem is not solved since the system can memorise a new code only if this has been memorised with the key at "ON" and in succession after the first transmitter.

The memory must be "opened" (see previous section) with the first transmitter, in order to correctly enter the other transmitters.

WARNING:

It should be noted that each single component of the alarm system installed on the car becomes an integral part of it and must not be altered or tested on other cars, even if of the same model.

Therefore never exchange control units and/or receivers between two cars.

If a control unit is changed, the memorising procedure must be repeated "re-opening" the memory.

If a receiver (ceiling light) is changed simplified programming followed by protected programming must be carried out.

WIRING DIAGRAM

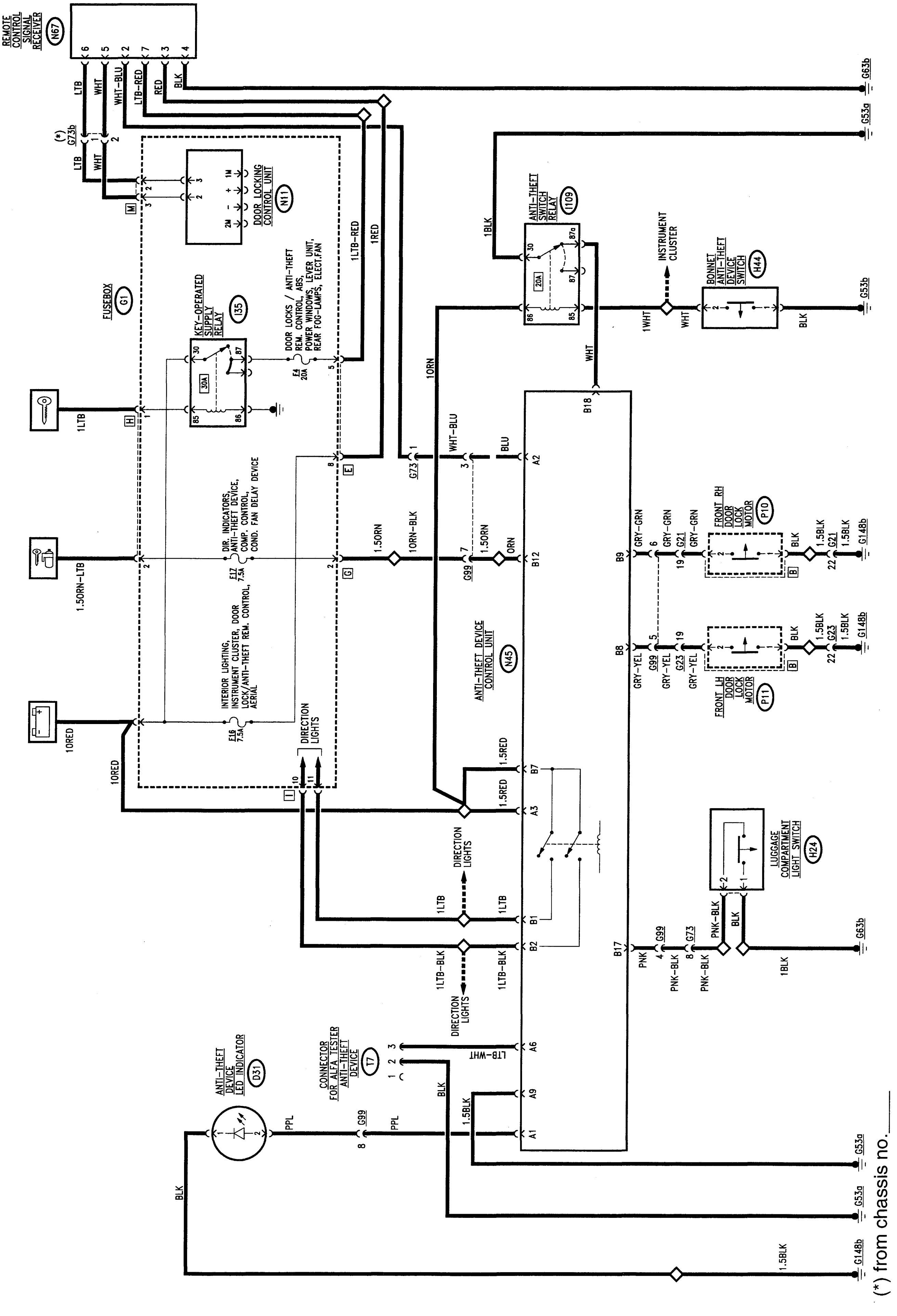

(*) from chassis no.____

FUNCTIONAL DESCRIPTION

The alarm system is controlled by electronic control unit **N45** integrated with the siren and the emergency key.

The control unit is supplied directly by the battery at pin A3; the key-operated supply reaches pin B12 via fuse **F17** of the fusebox **G1,** the same line also supplies pin B7 (blinker supply).

Pin A9 is earthed (**G53a**).

The system activation signal is sent from the receiver **N67** to pin A2 of the control unit, via the **serial connection line**.

Through the receiver **N67** door opening/closing is controlled, by means of the door lock control unit **N11** of fusebox **G1** (for further details see "Door locking System").

The control unit controls the closing of doors and bonnets via switches **P11** and **P10** of the doors (which are the same for the door locking device) which sends an earth respectively to pins B8C, B9. The bonnet is controlled by switch **H44**, which is connected at pin B18, and the boot by switch **H24** (the same that turns on the luggage compartment light) which is connected at pin B17.

The signal leading from the bonnet is "inverted" through a special relay **I109.**
N.B. The signals which reach the control unit from the doors and boot are a.c. when the door is closed and earth when the door is open. Conversely, the one from the bonnet is an earth signal when the bonnet is closed and a.c. when the bonnet is open.

In addition to the locking of the doors carried out directly by the receiver **N67**, the control unit activates the blinkers (flashing of the hazard warning lights) sending an intermittent signal from pin B1 for the righthand lights and from B2 for the lefthand lights.

Pin A1 of the control unit sends a "duty-cycle" signal to led **D31** when conditions so require.

Lastly the system can be connected with the Alfa Romeo Tester through connector **T7**; the diagnosis signal - line K - leaves from pin A6 of the control unit.

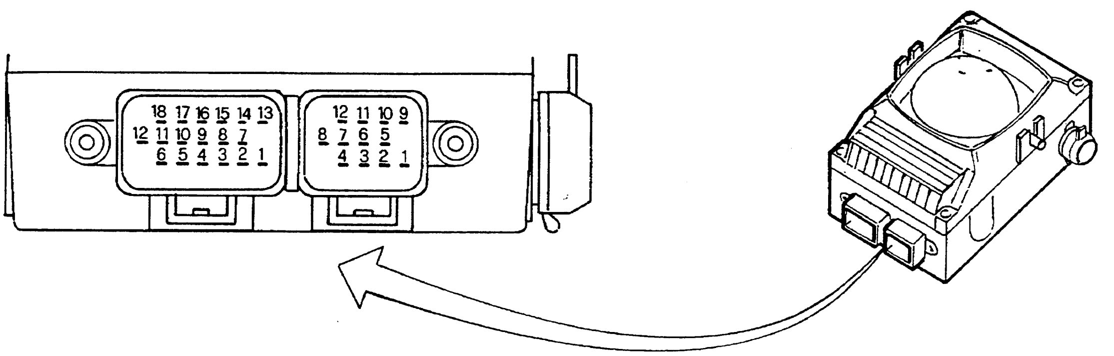

PIN-OUTS OF THE ALARM SYSTEM CONTROL UNIT

A1	Signalling led control
A2	Serial connection line with receiver (ceiling light)
A3	Direct supply
A4	N.C.
A5	N.C.
A6	Diagnosis line K
A7	N.C.
A8	N.C.
A9	Control unit earth
A10	N.C.
A11	N.C.
A12	N.C.

B1	RH direction indicators control
B2	LH direction indicators control
B3	N.C.
B4	N.C.
B5	N.C.
B6	N.C.
B7	Blinker supply
B8	LH door open signal
B9	RH door open signal
B10	N.C.
B11	N.C.
B12	"Key-operated" supply
B13	N.C.
B14	N.C.
B15	N.C.
B16	N.C.
B17	Tailgate open signal
B18	Bonnet closed signal

LOCATION OF COMPONENTS

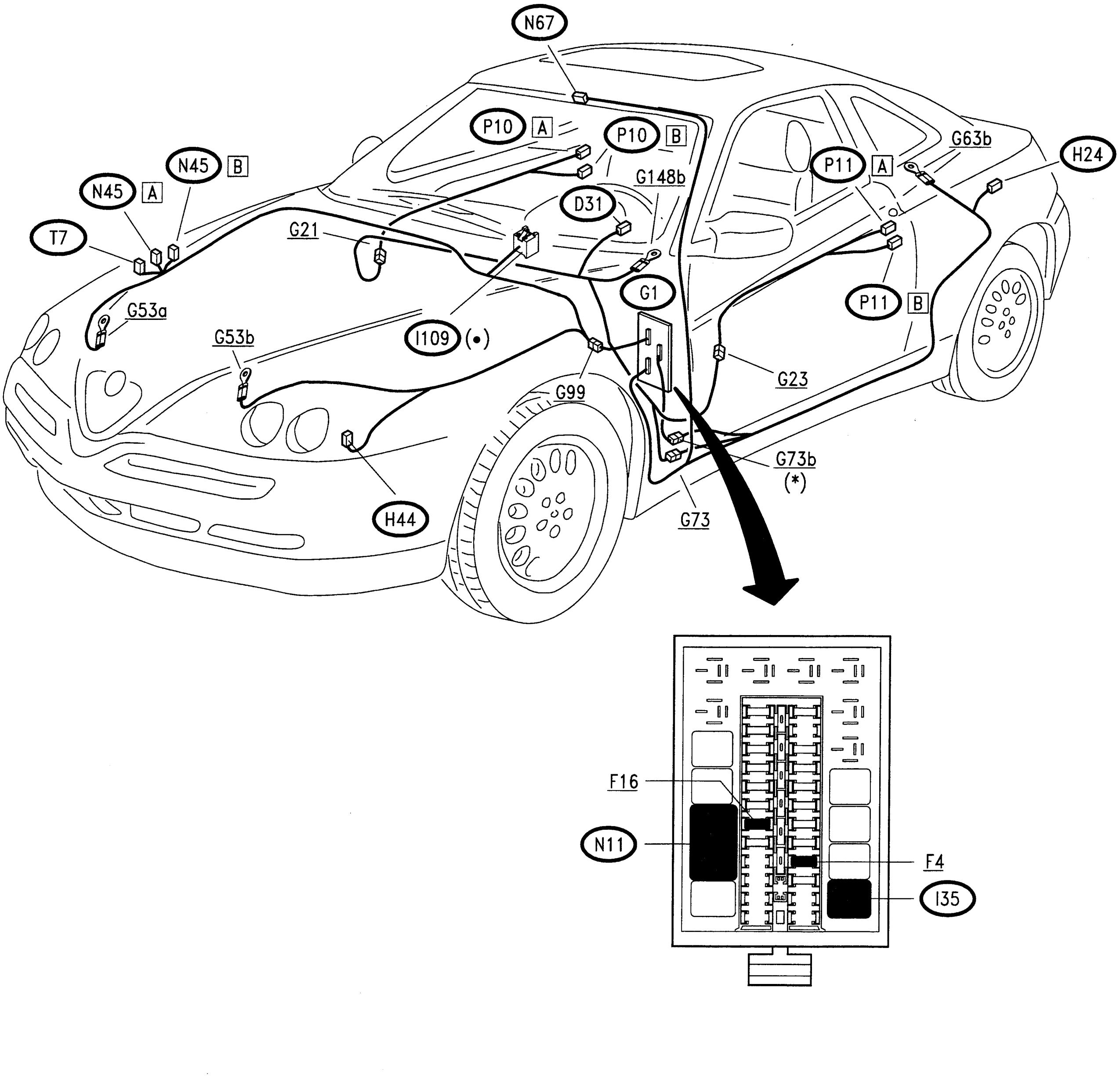

(•) Red base
(*) From chassis no.____

FAULT-FINDING

When the system is activated and deactivated it automatically carries out **SELF-DIAGNOSIS** which reveals certain possible faults by flashing the led as shown below:

ACTIVATION:

Type of led flashing	**Meaning**	**Test procedure**
8 Hz, duration 2.5 sec.	Door/bonnet/boot left open or faulty switch	Check that doors and bonnets are correctly shut. Activate and deactivate the system. Count the number of flashes of the led and proceed as described in the next table
Fixed light, duration 16 Hz, duration 2.5 sec.	Fault in the control unit electronics	Change the control unit **N45**
No flash	Fault of led	**B**

DEACTIVATION:

No. of Flashes of led	**Component with alarm**	Test to be carried out
1 Flash	RH front door	**C**
2 Flashes	LH front door	**D**
3 Flashes	--	(*)
4 Flashes	--	(*)
5 Flashes	--	(*)
6 Flashes	Bonnet	**E**
7 Flashes	Boot	**F**
8 Flashes	Key-operated supply cut off	**A**
9 Flashes	Battery supply cut off	**A**
10 Flashes	At least 3 causes of alarm contemporaneously	Repeat activation/deactivation of the system. If necessary

(*) function not foreseen for the version adopted here.

MANUAL DIAGNOSIS

It is possible to carry out MANUAL DIAGNOSIS, opening the bonnet and setting the ignition switch from the MARCIA position to the STOP position: within 15 seconds the bonnet pushbutton must be pressed 7 times in quick succession in less than 10 seconds; 5 beeps will signal the beginning of the manual diagnosis procedure. After 10 seconds the blinkers will flash once (500 ms).

Entering this mode, the self-diagnosis procedure of the volumetric sensors connected to the control unit is started automatically. if the test is positive, the direction indicators will flash three times and the control unit will sound 3 beeps simultaneously. After this initial phase, operate the different switches of the doors and boot; each change in the state of the switches will correspond to a brief flash of the direction indicators and a beep, accompanied by a flash of the signalling LED. When the MARCIA contact is engaged, the siren will sound briefly (500 msec.) and the blinkers will flash (2.5 sec.).

The latter will enable exit from the manual diagnosis procedure. It is also possible to exit MANUAL DIAGNOSIS by stopping all operations for 30 seconds: exit will be signalled by the turning on of the direction indicators for appr. 2.5 seconds and a beep.

FAULT FINDING USING THE ALFA ROMEO TESTER

In addition to the procedure described above, it is possible to quickly locate any faults by connecting the Alfa Romeo Tester to the control unit, using the special cartridge.

N.B.: Beforehand, carry out **TEST A**.

PRELIMINARY CONTROL UNIT CHECK N45

TEST A

TEST PROCEDURE		RESULT	CORRECTIVE ACTION
A1	CHECK FUSES	OK ▶	Carry out **step A2**
	– Check the intactness of fuses **F17, F4** and **F16** of fusebox **G1**	~~OK~~ ▶	Change fuses **F17, F4** and/or **F16**
A2	CHECK VOLTAGE	OK ▶	Carry out **step A3**
	– Check for 12 V at pin A3 of control unit **N45**	~~OK~~ ▶	Restore the wiring between pin A3 of **N45** and the branch fusebox **G1**
A3	CHECK VOLTAGE	OK ▶	Carry out **step A4**
	– With the ignition key turned, check for 12 V at pin B12 of control unit **N45**	~~OK~~ ▶	Restore the wiring between pin B12 of **N45** and the fusebox **G1**
A4	CHECK EARTH	OK ▶	Carry out **step A5**
	– Check that pin A9 of control unit **N45** is earthed (0 V)	~~OK~~ ▶	Restore the wiring between pin A9 of **N45** and earth **G53a**
A5	CHECK SERIAL CONNECTION	OK ▶	Carry out **step A6**
	– Check the continuity of the connection between pin A2 of **N45** and pin 2 of receiver **N67**	~~OK~~ ▶	Restore the wiring between **N67** and **N45**
A6	CHECK CONTINUITY	OK ▶	CONNECT TO THE DIAGNOSIS SOCKET **T7** AND CONTINUE OPERATIONS WITH THE ALFA TESTER, OR FOLLOW THE INSTRUCTIONS OF THE LED THAT SIGNALS THE RESULTS OF SYSTEM SELF-DIAGNOSIS
	– Check the continuity of the cables: - between pin A6 of **N45** and pin 3 of diagnosis connector **T7** - between pin 2 of **T7** and earth **G53a**	~~OK~~ ▶	Restore the wiring between **T7, N45** and **G53a**

CHECK WARNING LED D31

TEST B

TEST PROCEDURE		RESULT	CORRECTIVE ACTION
B1	CHECK LED	OK ▶	Carry out **step B2**
	– Disconnect led **D31** and check that it is working (applying for example 5 V at the terminals)	~~OK~~ ▶	Change the led **D31**
B2	CHECK CONTINUITY	OK ▶	Change the control unit **N45**
	– Check continuity between: - one of the terminals of led **D31** and earth **G148b** - the other terminal of led **D31** and pin A1 of control unit **N45**	~~OK~~ ▶	Restore the wiring between: - **D31** and earth **G148b** - **D31** and pin A1 of **N45**

CHECK RH FRONT DOOR CONTACT P10

TEST C

TEST PROCEDURE		RESULT	CORRECTIVE ACTION
C1	CHECK DOOR LOCKING DEVICE	OK ▶	Carry out **step C2**
	– Check that the door locking device is working properly, with regard to the RH front door	~~OK~~ ▶	Follow the instructions in FAULT-FINDING in the section "DOOR LOCKING SYSTEM"
C2	CHECK EARTH	OK ▶	Change the control unit **N45**
	– With the door open, check for 0 V (earth) at pin B9 of anti- theft control unit **N45**	~~OK~~ ▶	Restore the wiring between pin B9 of control unit **N45** and door lock **P10**

CHECK LH FRONT DOOR CONTACT P11

TEST D

TEST PROCEDURE		RESULT	CORRECTIVE ACTION
D1	CHECK DOOR LOCKING DEVICE	OK ▶	Carry out **step D2**
	– Check that the door locking device is working properly, with regard to the LH front door	~~OK~~ ▶	Follow the instructions given in FAULT-FINDING of the "DOOR LOCKING DEVICE" section
D2	CHECK EARTH	OK ▶	Change the control unit **N45**
	– With the door open, check for 0 V (earth) at pin B8 of the anti-theft control unit **N45**	~~OK~~ ▶	Restore the wiring between pin B8 of control unit **N45** and the door lock **P11**

CHECK BONNET CONTACT H44 — TEST E

TEST PROCEDURE	RESULT	CORRECTIVE ACTION
E1 CHECK CONTACT – Check the correct fastening of contact **H44** and of the striker on the bonnet	OK ▶	Carry out **step E2**
	~~OK~~ ▶	Fix or change contact **H44** or the corresponding striker
E2 CHECK EARTH – With the bonnet open, check for an earth on both terminals of switch **H44**	OK ▶	Carry out **step E3**
	~~OK~~ ▶	Restore the wiring between **H44** and earth **G53b**
E3 CHECK EARTH – With the bonnet closed, check for 0 V (earth) at pin B18 of anti-theft control unit **N45**; opening the bonnet the signal ceases	OK ▶	Change the control unit **N45**
	~~OK~~ ▶	Check relay **T109**; restore the wiring between switch **H44** and relay **T109**, and between this and pin B18 of control unit **N45**

CHECK BOOT CONTACT H24 — TEST F

TEST PROCEDURE	RESULT	CORRECTIVE ACTION
F1 CHECK LUGGAGE COMPARTMENT LIGHT – Check that the light turns on when the boot is opened	OK ▶	Carry out **step F2**
	~~OK~~ ▶	Follow the instructions given in FAULT-FINDING in the "CEILING LIGHTS" section
F2 CHECK EARTH – With the boot open, check for 0 V (earth) at pin B17 of anti-theft control unit **N45**	OK ▶	Change the control unit **N45**
	~~OK~~ ▶	Restore the wiring between contact **H24** and pin B17 of control unit **N45**

LUGGAGE COMPARTMENT AND FUEL FLAP OPENING CONTROL

INDEX

WIRING DIAGRAM

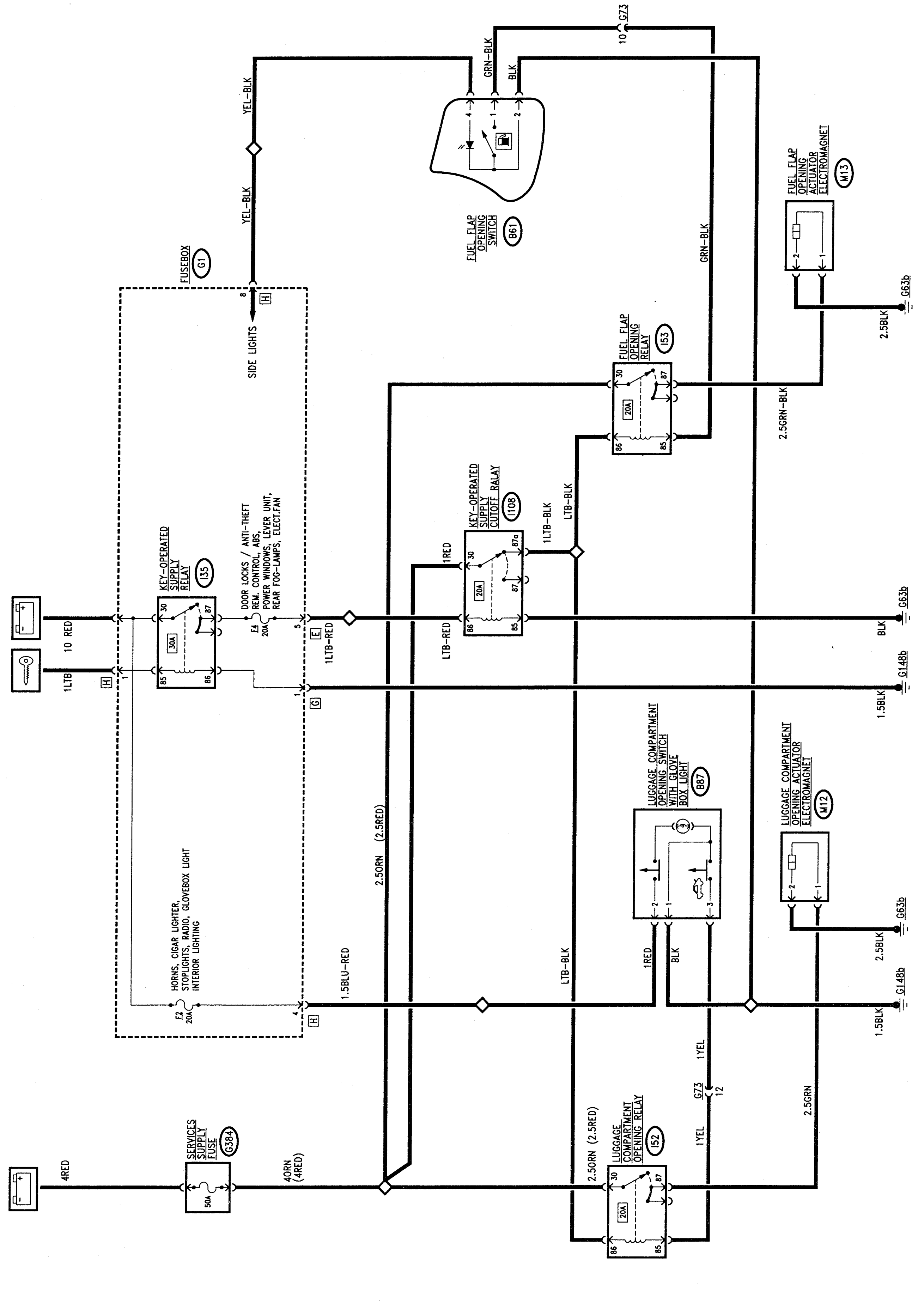

GENERAL DESCRIPTION

In addition to using the key in the rear lock, the **luggage compartment** can also be opened from inside the car through an electrical control.
The switch that opens the lock by an electromagnetic control is to be found in the glove box.
The glove box is illuminated automatically when it is opened by a light on the switch. This device only works with the ignition key at STOP, otherwise the lock must be opened manually.

The **fuel flap** is opened by an electrical control by the switch on the dashboard which operates the corresponding electromagnet.

This device too, only operates with the ignition key at STOP.

The two relays which operate the devices, the supply fuse and the "key-operated cut out" are located in the rear compartment.

FUNCTIONAL DESCRIPTION

The boot opening electromagnet **M12** is controlled by relay switch **I52**: this is supplied on the power line by battery voltage via floating fuse **G384** and on the energizing line by relay switch **I108**: this switch sends the supply to relay **I52** and to the other release devices if it does not "receive" the signal that the key is at "MARCIA"; in fact, when the key is turned it cuts off the supply; the command signal - earth signal to energize relay **I52** - leads from the special switch **B87** located in the glove box; the energized relay supplies electromagnet **M12** which triggers the boot lock.
The switch in **C16** is illuminated when the side lights are on.

NOTE: switch **B87** incorporates a pushbutton which turns on a light when the glovebox is opened; the supply line for this light leads from fuse **F2** of **G1**.

The fuel flap opening electromagnet **M13** is controlled by relay **I53** in the same way as described for the luggage compartment opening.

The control switch **B61** is to be found on the dashboard and it is illuminated when the side lights are on.

LOCATION OF COMPONENTS

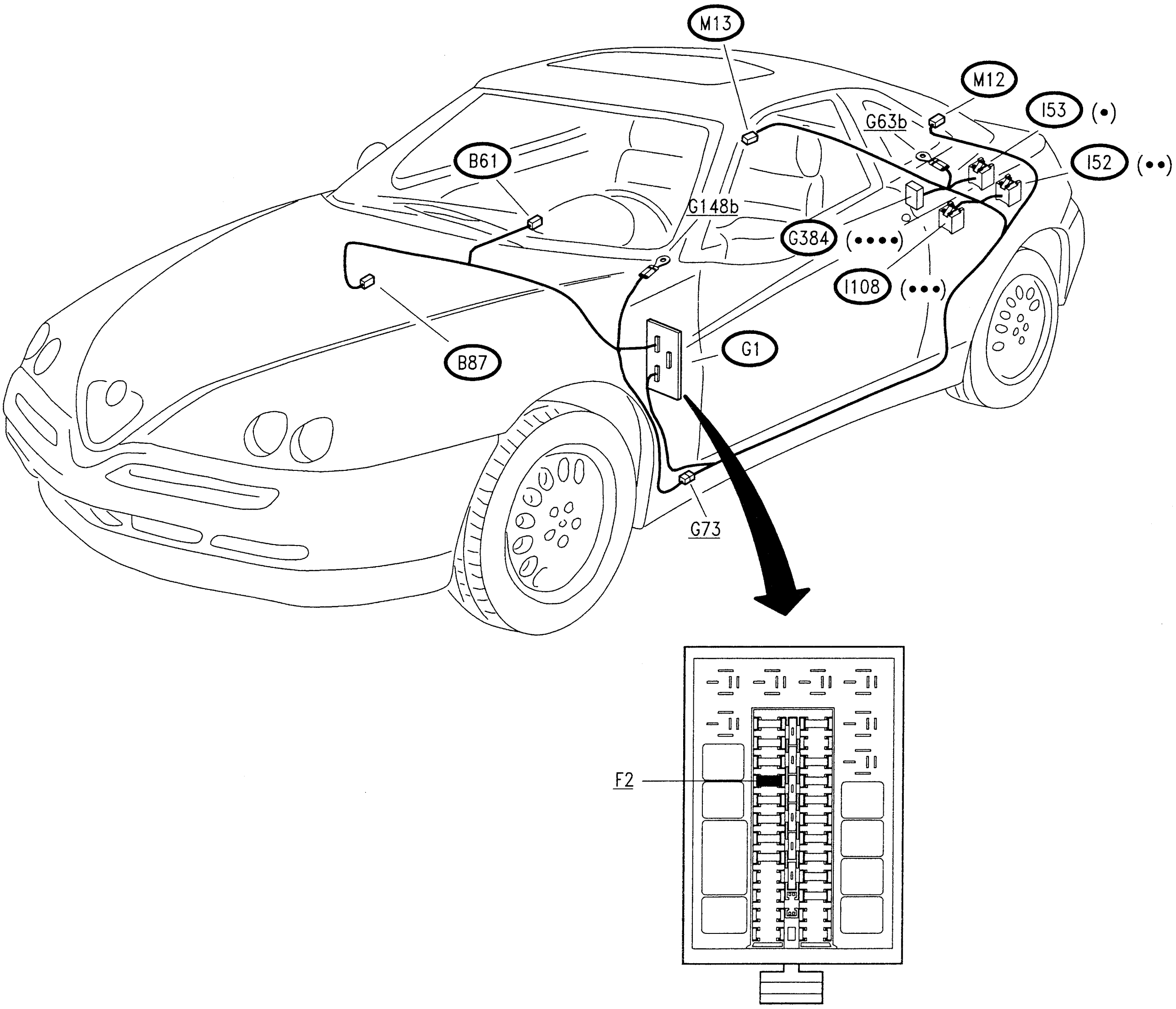

(•) White base
(••) Green base
(•••) Blue base
(••••) Black fuseholder

FAULTFINDING TABLE

Failure	Component to be checked								
	F2	G384	M12	M13	I52	I53	B87	B67	I108
Boot opening control		•	•		•		•		•
Fuel flap opening control		•		•		•		•	•
Fuel flap opening switch lighting (with sidelights on)								•	
Glove box lighting (with glove box open)	•						•		

CHECK COMPONENTS

Boot opening electromagnet M12

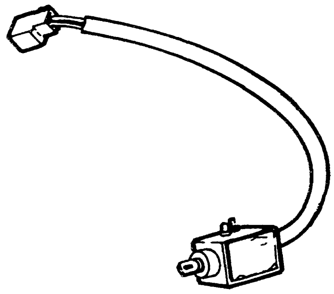

SPECIFICATIONS	
Nominal voltage	12V
Absorbed current	31A
Magnetic core stroke	7 ± 0.5 mm

Fuel flap opening electromagnet M13

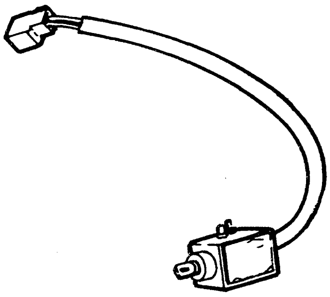

SPECIFICATIONS	
Nominal voltage	12V
Absorbed current	31A
Magnetic core stroke	7 ± 0.5 mm

HOOD (SPIDER only)

INDEX

WIRING DIAGRAM (up to chassis no.____)

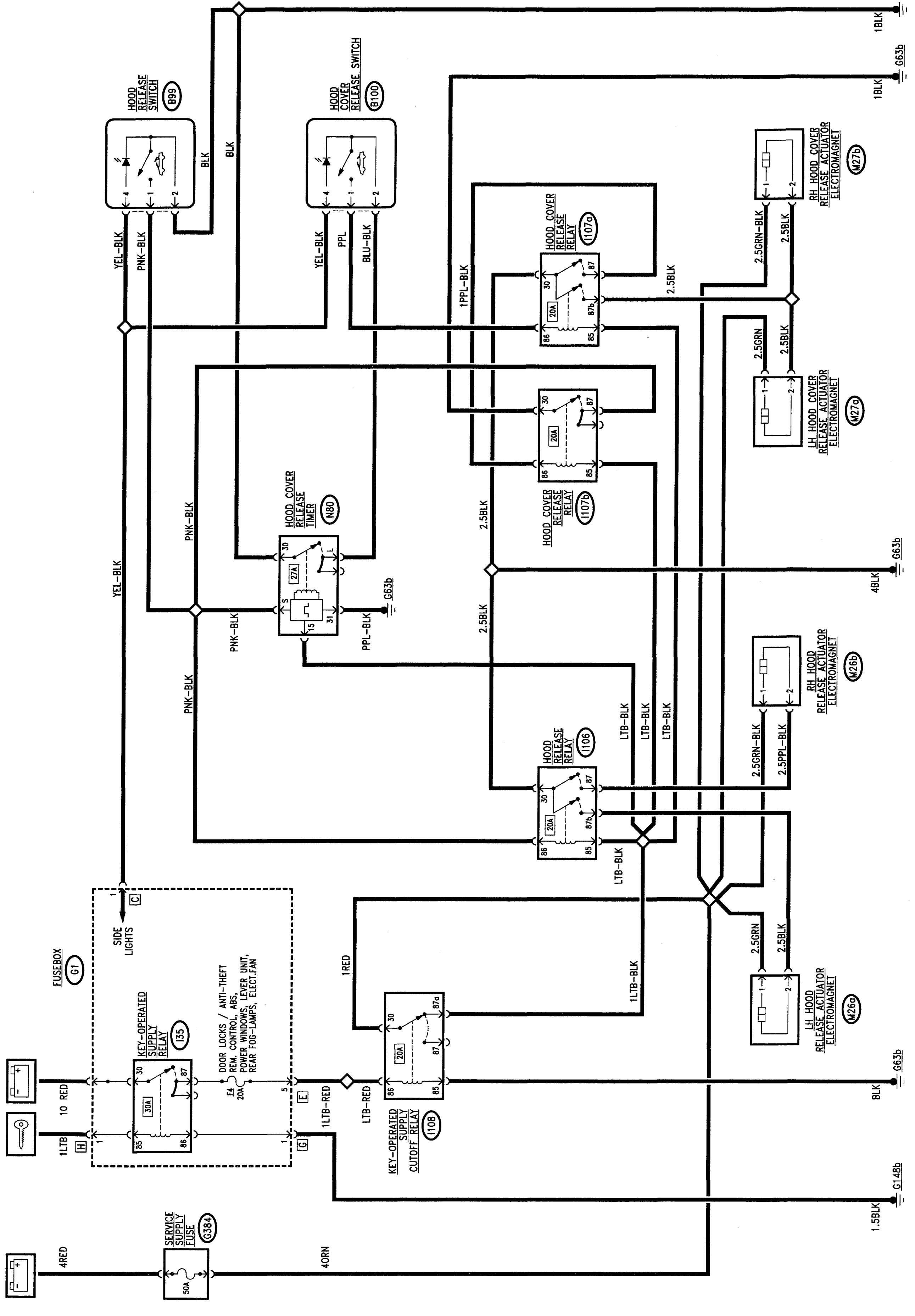

WIRING DIAGRAM (from chassis no.___)

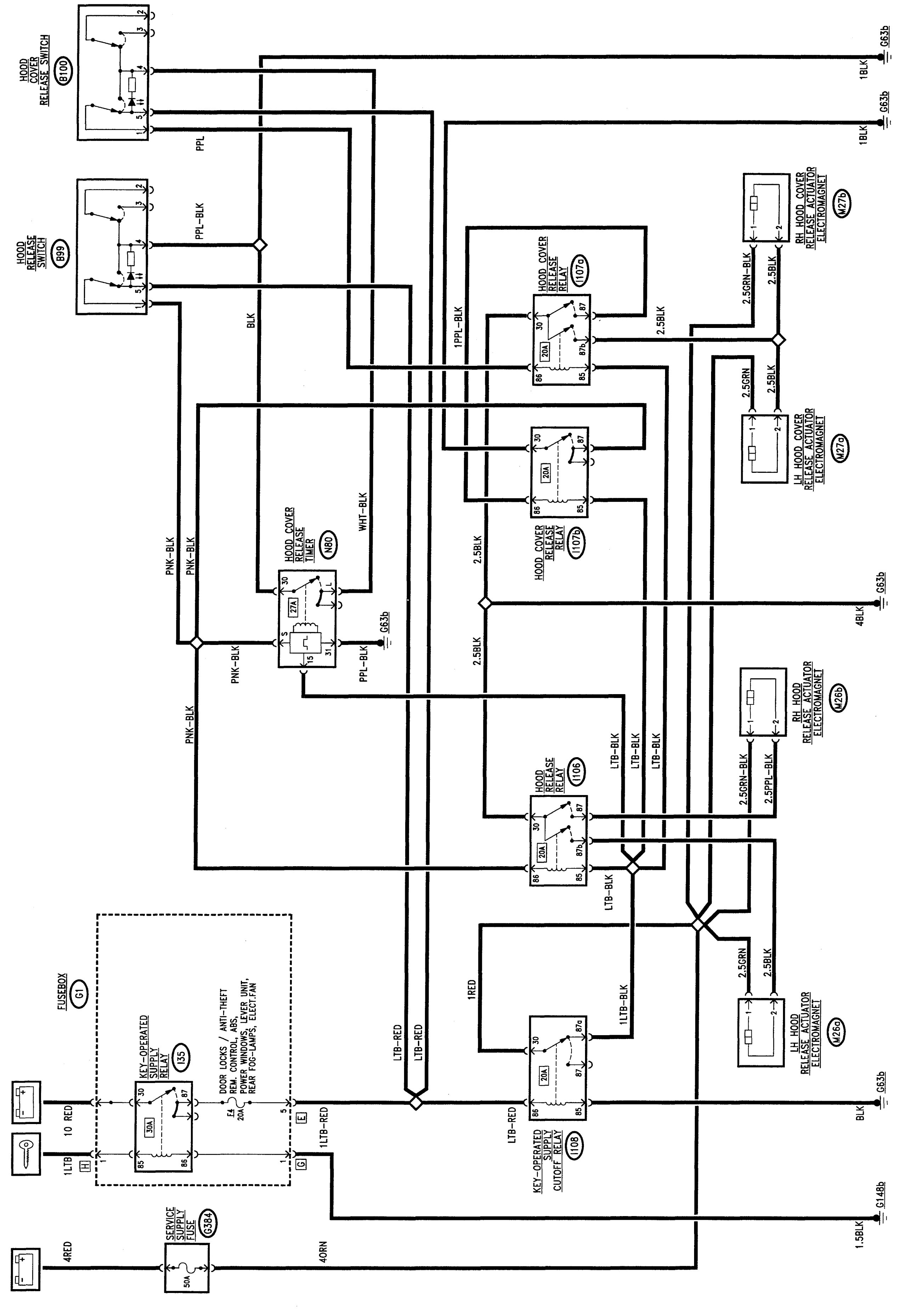

GENERAL DESCRIPTION

In the SPIDER, opening/closing the hood is facilitated by two electrical actuators: the first one releases the hood at the rear when it is closed; the second one opens the hood cover so that the hood can be folded in or taken out.

For each of these functions a special switch commands one or more relays which in turn operate a pair of release actuators. The switches are located on the rear side panel behind the driver's seat.

N.B. Both devices can be operated only with the ignition key removed or in the STOP position.
The hood cover can only be released after the hood has been released.

All the operating relays, the supply fuse and the "key-operated cutout" relay are to be found in the boot.

FUNCTIONAL DESCRIPTION

The electromagnets **M26a** and **M26b** which operate the release of the hood are powered with battery voltage via wander fuse **G384**; the earth signal is received from the corresponding relay **I106**, which has the energizing line leading from relay **I108** - this is a shunt which sends the power to **I106** and the other relays only when it "feels" the signal of the key turned to "MARCIA"; in fact when the key is turned this supply cuts out. The signal that energizes relay **I106** leads from switch **B99** behind the driver's seat: the energized relay supplies the two electromagnets **M26a** and **M26b** which release the rear fastening of the hood.

The hood cover is only released when the hood has been released previously: this takes place via the timer **N80** and the two relays **I107a** and I107b. The "hood release" control signal energizes timer **N80** (pin S) which for appr. 20 minutes sends an earth signal to switch **B100** which is active only in this case. This is the only possible way to send a control signal to energize relay **I107a** which sends an earth signal to the two electromagnets **M27a** and **M27b** which release the fastening of the hood cover - the two electromagnets are powered with battery voltage via wander fuse **G384** -.
The energizing line for relay **I107a**, like **I107b** leads from relay **I108**, therefore, their supply is cut out when the key is turned.
Simultaneously another earth signal - **I107a** has a double contact - is sent, via the other relay **I107b**, to pin S of timer **N80**, to cut out timing.

Up to chassis no.____, switch **B99** is lit when the side lights are on, from chassis no.____ it is lit up with the key at MARCIA, while switch **B100** lights up only when it is pressed.

LOCATION OF COMPONENTS

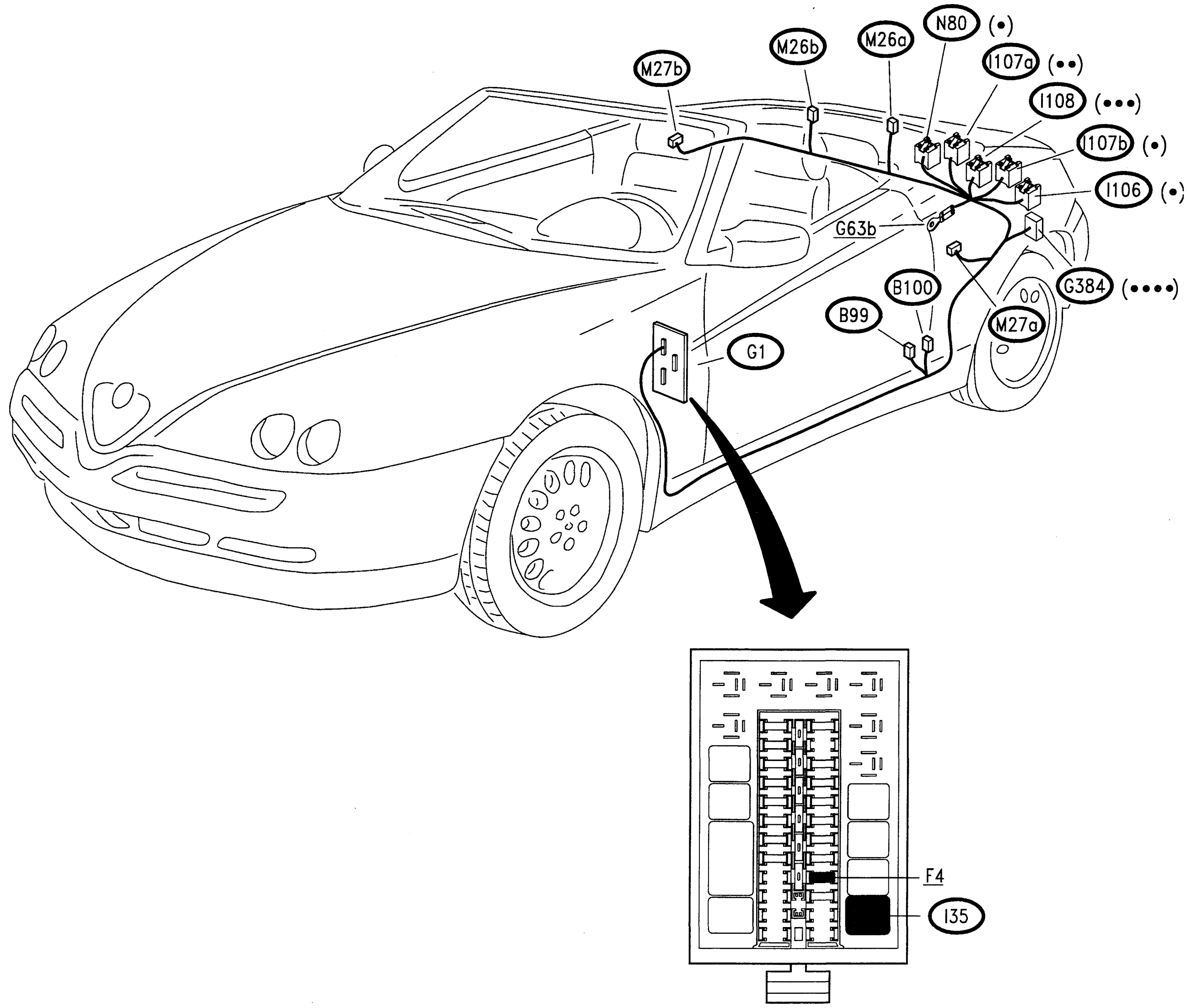

(•)	Black base
(••)	Red base
(•••)	Blue base
(••••)	Black fuseholder

FAULTFINDING TABLE

Fault	Component to be checked										
	G384	M26a	M26b	M27a	M27b	I106	I107a	I107b	B99	B100	N80
Hood release control	●	●	●			●			●		
Hood cover release control (*)	●			●	●		●	●		●	●
Release switches lighting (with sidelights on) (**)									●	●	

(*) N.B. this function can only be operated after releasing the hood.
(**) Switch B100 is only illuminated when hood cover releasing is possible (after the hood has been locked).

CHECK COMPONENTS

Hood release electromagnet M26a M26b

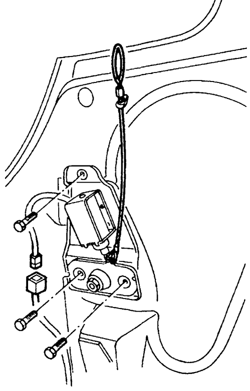

SPECIFICATIONS	
Nominal voltage	12V
Absorbed current	31A
Magnetic core stroke	10 ± 0.5 mm

Hood cover release electromagnet M27a M27b

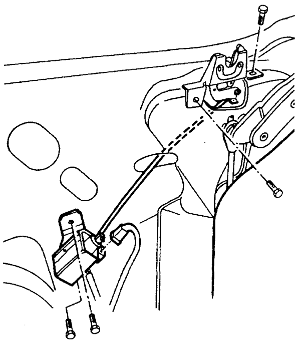

SPECIFICATIONS	
Nominal voltage	12V
Absorbed current	31A
Magnetic core stroke	7 ± 0.5 mm

Hood cover release timer N80

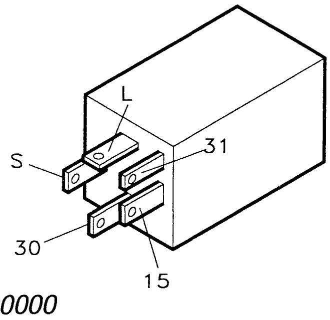

Check the device: see **TEST A**

CHECK HOOD COVER RELEASE TIMER N80

TEST A

TEST PROCEDURE		RESULT	CORRECTIVE ACTION
A1	CHECK VOLTAGE – Disconnect device **N80** and check on the base for 0V at pins 30 and 31; with the ignition key at MARCIA, 12V between pins 15 and 30	OK ▶	Carry out **step A2**
		~~OK~~ ▶	Check floating fuse **G384** and relay **I108**. Restore the wiring between **N80** and earth **G63b**
A2	CHECK COMMAND SIGNAL – Operate switch **B99** and check for an earth at pin S of **N80**	OK ▶	Insert device **N80** on the base and continue with **step A3**
		~~OK~~ ▶	Restore the wiring between **B99** and **N80**, and between **B99** and earth **G63b**
A3	CHECK HOOD COVER OPERATION – Operate switch **B99** and check for 12V at pin L of **N80**	OK ▶	DEVICE **N80** IS WORKING PROPERLY. Check the other components of the system and their connections
		~~OK~~ ▶	CHANGE DEVICE **N80**

AUTOMATICALLY-OPERATED HOOD

INDEX

INTRODUCTION

The entire electrohydraulic system is governed by a specific electronic control unit.

The control unit receives the position signals from the sensors (switched) located on the locks of the hood and of the hood cover and on the hood operating cylinders.

It also receives the consent signals to operate the system: key at MARCIA, handbrake engaged and car speed.

On the basis of the memorised logic and the command signal leading from the control button, the control unit controls the solenoid valves of the hydraulic system and the electric locks.

Other output signals are sent to the led and to the diagnosis connector.

The figure below summarizes the flow of signals going in and out of the control unit.

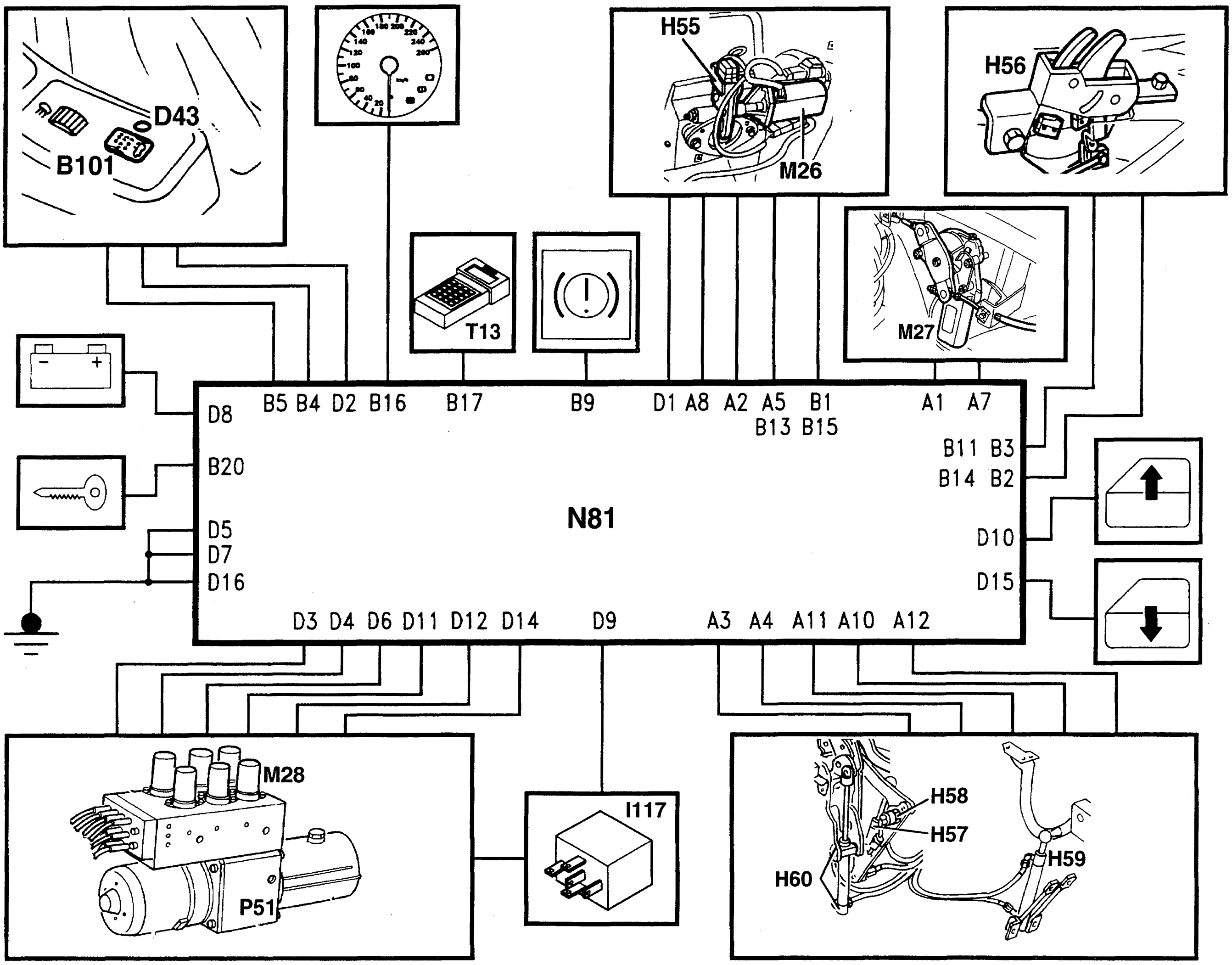

***NOTE:** the components are identified by the code used in the wiring diagrams*

B101	*Automatic hood control switch*
D43	*Signalling led for automatic hood*
H55a	*RH hood closing switch*
H55b	*LH hood closing switch*
H56a	*RH hood cover closing switch*
H56b	*LH hood cover closing switch*
H57	*5th arc raised switch*
H58	*Intermediate 5th arc switch*
H59	*Hood cover raised switch*
H60	*Hood position switch*
I117	*Automatic hood electric pump relay*
M26a	*LH hood release actuator*
M26b	*RH hood release actuator*
M27	*Hood cover release actuator*
M28	*Automatic hood solenoid valves*
N81	*Automatic hood control unit*
P51	*Automatic hood control pump*
T13	*Diagnosis connector for Alfa Romeo Tester*

Operating logic carried out by the control unit

OPENING CYCLE:

1. lowering of the windows

the windows are lowered for appr. 1 second.

2. hood closing

the hood closing solenoid valves (no.4) and the electric pump ae operated; the solenoid valve remains active also at the signal from "hood closed" switch;

3. opening of 5th arc locks

the release relay of the two locks is activated until the signal of the "5th arc lowered" switch is received. The hood closing solenoid valve (no.4) remains active to keep the hood in position;

4. 5th arc raising

the 5th arc raising solenoid valve (no.6) is actvated: after 0.6 seconds from the signal from the "5th arc raised" switch operations continue with step 5;

5. hood cover lock opening

the 5th arc raising solenoid valve (no. 6) remains active, and the hood cover lock release relay is activated: when the signal is received from the "hood cover release" switch the relay remains active for another 0.2 seconds;

6. hood cover opening

the 5th arc raising solenoid valve (no. 6) remains active while the hood cover opening solenoid valve (no. 1) is also activated: at the signal from the "hood cover raised" switch operations continue with the next step;

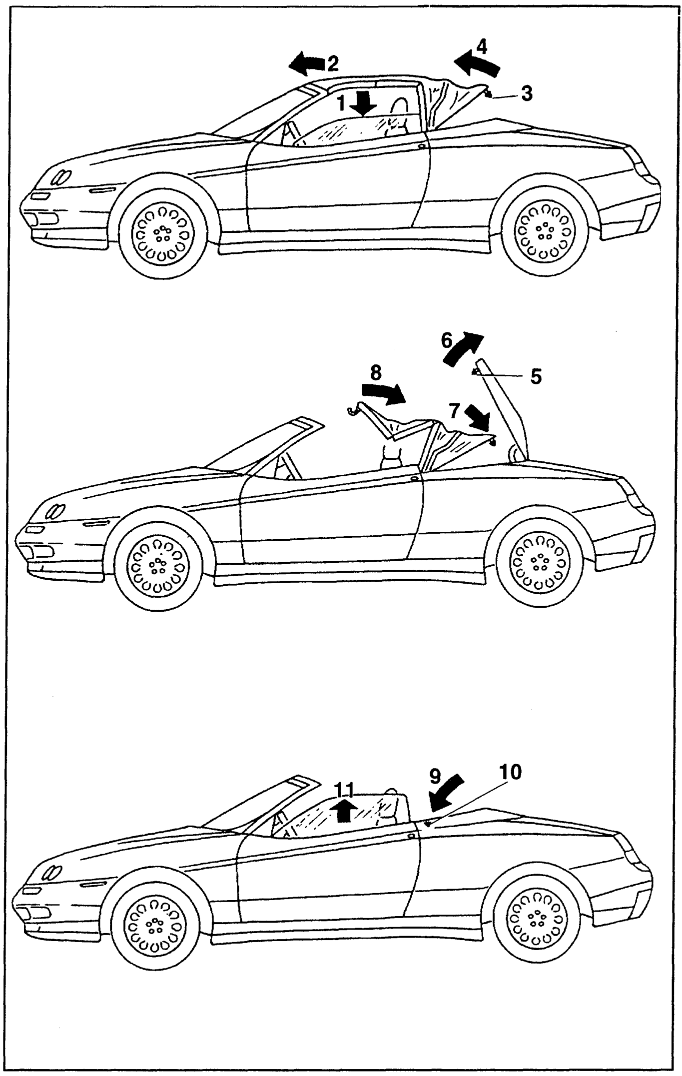

7. 5th arc lowering

the hood cover opening solenoid valve (no. 1) remains activated while the 5th arc lowering solenoid (no. 5) is also activated and then deactivated after 0.2 seconds from the signal from the "intermediate 5th arc" switch.

8. hood opening

the hood cover opening solenoid valve (no.1) remains activated while the hood opening solenoid valve (no. 4) is also activated; at the signal from the "hood open" switch the hood cover opening solenoid valve is deactivated, and after 0.5 seconds operations continue with step 9.

9. hood cover closing

the hood cover closing solenoid valve (no. 2) is activated: at the signal from the "hood cover closed" switch the electric pump is deactivated, while the solenoid valve remains active;

10. hood cover lock closing

the hood cover lock closing relay is activated: when the signal from the "hood cover lock closed" switches is received the relay remains active for another 0.2 seconds;

11. window closing

as soon as the hood cover is closed again, the windows are highered for a maximum of 12 seconds. Releasing the system operation button during this last operation the windows stop.

CLOSING CYCLE

1. hood cover lock opening and lowering of the windows

the hood cover lock release relay is activated: when the signal is received from the "hood cover release" switches the relay remains active for another 0.2 seconds.
Simultaneously the windows are lowered for appr. 1 second;

2. hood cover opening

the hood cover opening solenoid valve (no. 1) is activated: after 0.5 seconds from the signal from the "hood cover raised" switch operations continue with step 3;

3. hood closing

The hood cover opening solenoid valve (no. 1) remains activated while also the hood closing solenoid valve (no. 3) is activated and then deactivated at the signal from the "hood closed" switch;

4. 5th arc raising

The hood cover opening solenoid valve (no. 1) remains activated while the 5th arc raising solenoid valve (no. 6) is also activated; at the signal from the "5th arc raised" switch the hood cover opening solenoid valve is deactivated, and after 1 second operations continue with step 5;

5. hood cover closing

the 5th arc raising solenoid valve (no. 6) remains active while the hood cover closing solenoid valve (no. 2) is activated until receiving the signal from the "hood cover closed" switch;

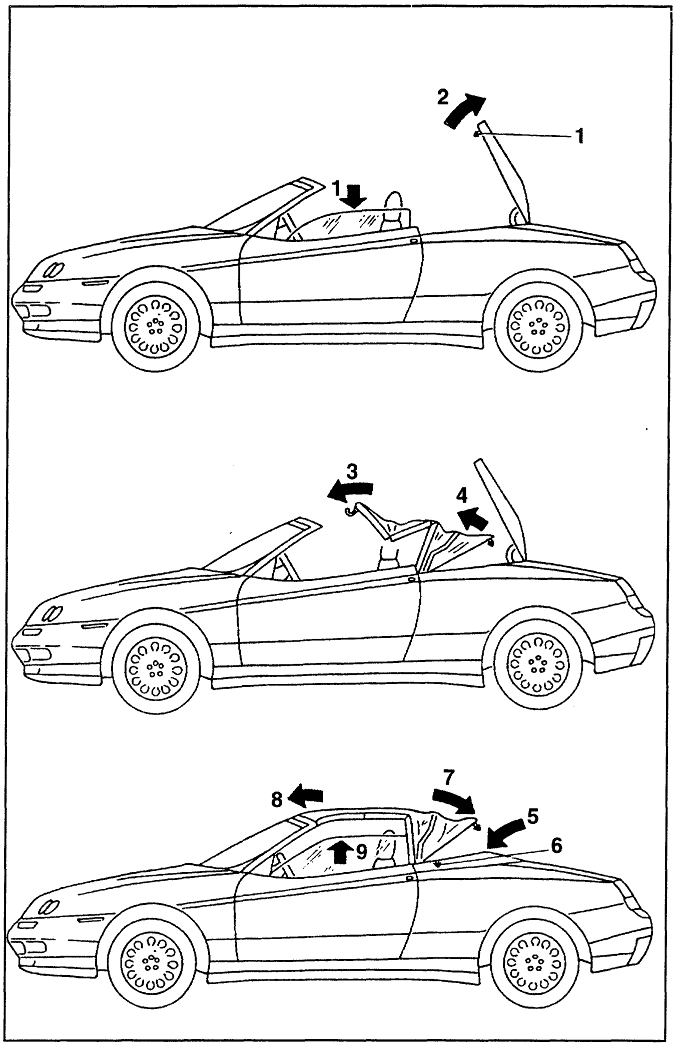

6. hood cover lock closing

the hood cover lock closing relay is activated: when the signal is received from the "hood cover lock closed" switches the relay remains active for another 0.2 seconds.

7. 5th arc lowering and locks closing

the hood opening and closing solenoid valves (no. 3 and 4) are activated to keep the hood in position; at the signal from the "intermediate 5th arc" switch the relay for closing the two locks is activated remaining active for 0.5 seconds from the signal of the "5th arc locks closed" switches.
The 5th arc lowering solenoid valve (no. 5) is also activated and then deactivated after 1 second from the signal from the "5th arc closed" switch

8. facilitated front catching

the hood opening solenoid valve (no. 4) is deactivated to lower the pressure in the hood cylinders, thereby facilitating manual catching of the hood to the windscreen.
At this point the led goes off, while the hood closing solenoid valve (no. 3) remains active for another 20 seconds;

9. windows closing

pressing the button again - within 25 seconds - the windows are highered for a maximum of 12 seconds.

Releasing the system operating button during this operation the windows stop.

Electronic control unit (N81)

The electronic control unit is housed in the rear console of the passenger compartment next to the electrohydraulic unit:

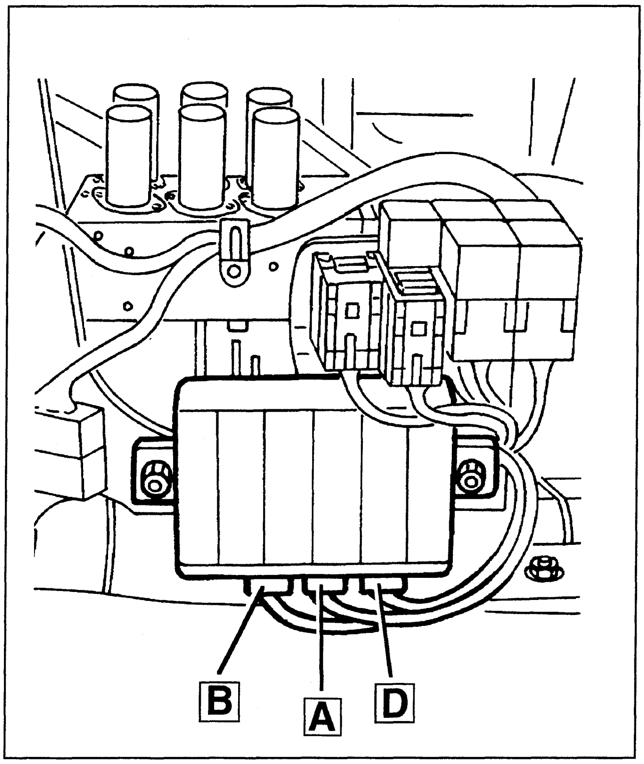

CONTROL UNIT PIN-OUTS:

connector A

1 hood cover release command
2 RH hood closing command
3 hood position switch signal (lowered)
4 hood position switch signal (raised)
5 LH hood closing switch signal (approached)
7 hood cover closing command
8 hood release command
10 5th arc intermediate switch signal
11 5th arc raised switch signal
12 hood cover raised switch signal connector B:

connector B

1 LH hood closing switch signal (locked)
2 RH hood cover closing switch signal (approached)
3 LH hood cover closing switch signal (locked)
4 command signal from switch (closing)
5 command signal from switch (opening)
9 handbrake engaged signal
11 RH hood cover closing switch signal (locked)
13 RH hood closing switch switch signal (locked)
14 LH hood cover closing switch signal (approached)
15 RH hood closing switch signal (approached)
16 tachometric signal
17 diagnosis line K
20 key-operated supply

connector D

1 LH hood closing command
2 luminous led signal
3 command for solenoid valve no. 6 (5th arc raising)
4 command for solenoid valve no. 2 (hood cover closing)
5 earth
6 command for solenoid valve no. 1 (hood cover opening)
7 earth
8 direct supply
9 pump relay command
10 power window rising command
11 command for solenoid valve no. 3 (hood opening)
12 command for solenoid valve no. 4 (hood closing)
14 command for solenoid valve no. 5 (5th arc lowering)
15 power window lowering command
16 earth

Hood locks

The two locks that lock the 5th arc of the hood on the hood cover are formed of a threaded pin (A) which engages on a lead screw (B) operated by a motor. **(M26a/b)**

On the lock there is a microswitch (**H55a/b**) with two contacts: the first (C) signals the "approach" of the 5th arc pin to the lead screw, while the second (D) signals the clamping of the lock.

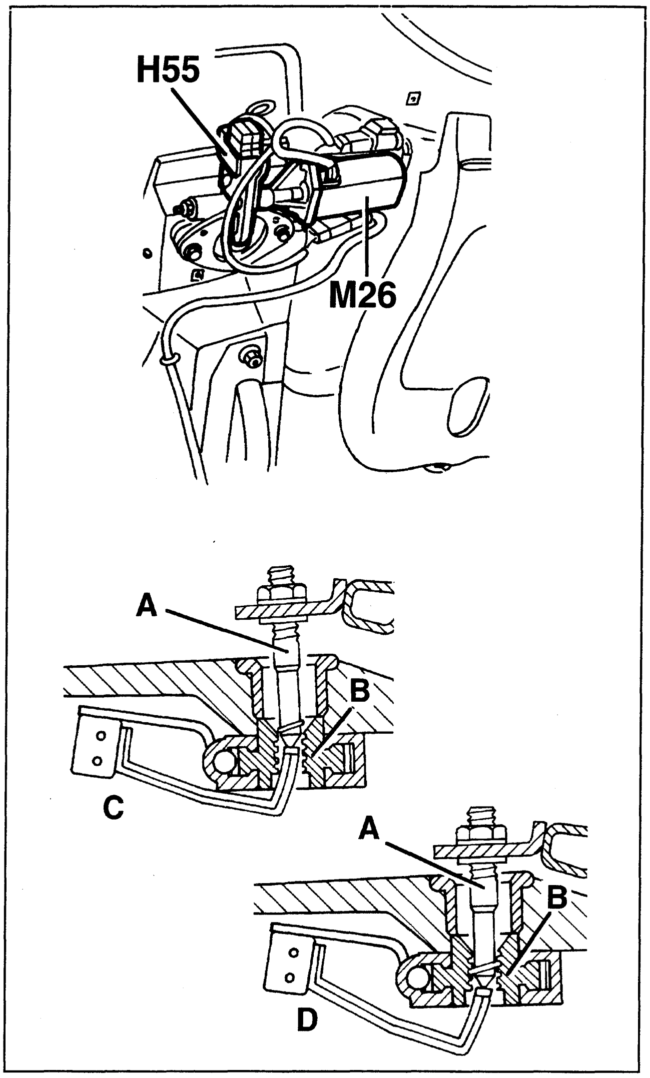

Hood cover locks

The two hood cover locks are controlled by the centre gear motor (**M27**) through cables (A).

Also on these locks there is a microswitch (**H56a/b**) with two contacts: the first (C) signals the "approach" of the hood cover to the lock, while the second (D) signals the clamping of the lock.

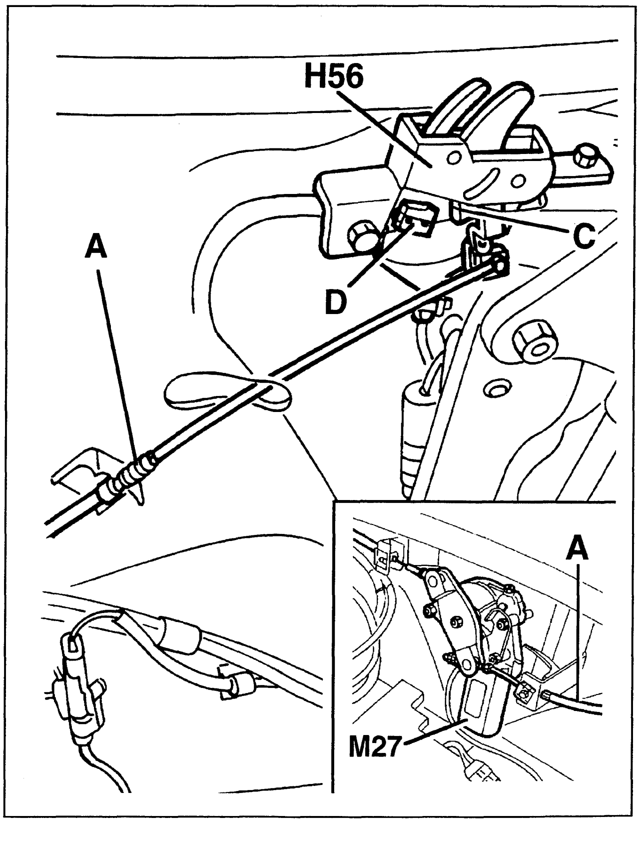

Switches on cylinders

On the operating cylinders of the **left hand side** there are four switches, namely:

- 5th arc raised switch (**H57**), on the 5th arc cylinder;
- hood cover raised switch (**H59**), on the hood cover cylinder;
- hood position switch (**H60**) on the hood cylinder: this comprises two contacts : the first (A) signals that the hood is lowered, the second (B) that the hood is raised.

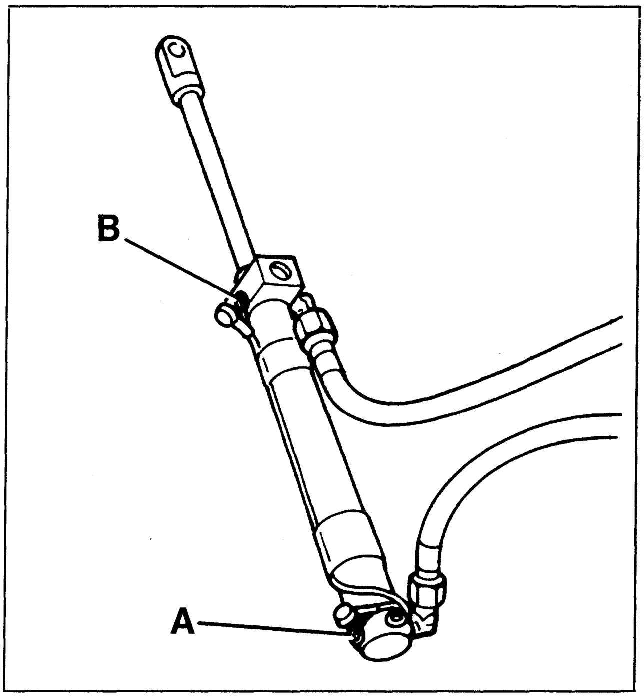

These four switches comprise an electric contact (1) which connects to earth via the spring (A) with the PISTON RAISED or (only for the hood cylinder) an electric contact (2) which connects to earth via spring (B) with the PISTON LOWERED.

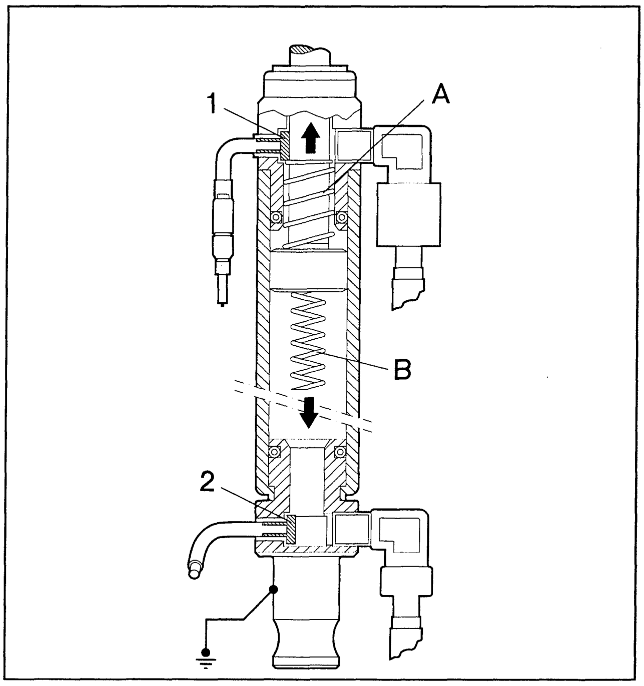

Intermediate 5th arc switch

This is a ball contact (**H58**) which connects to earth when the frame of the 5th arc takes a precise position during the closing of the 5th arc itself: this allows the control unit to operate the motors of the pins of the 5th arc locks a few seconds before the 5th arc is completely closed in order to obtain improved "catching" between the pin and the lock.

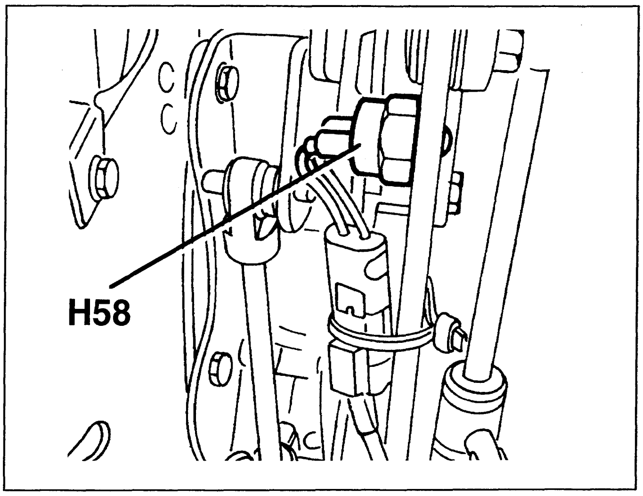

WIRING DIAGRAMS

1. CONTROL UNIT AND CONSENT SIGNALS

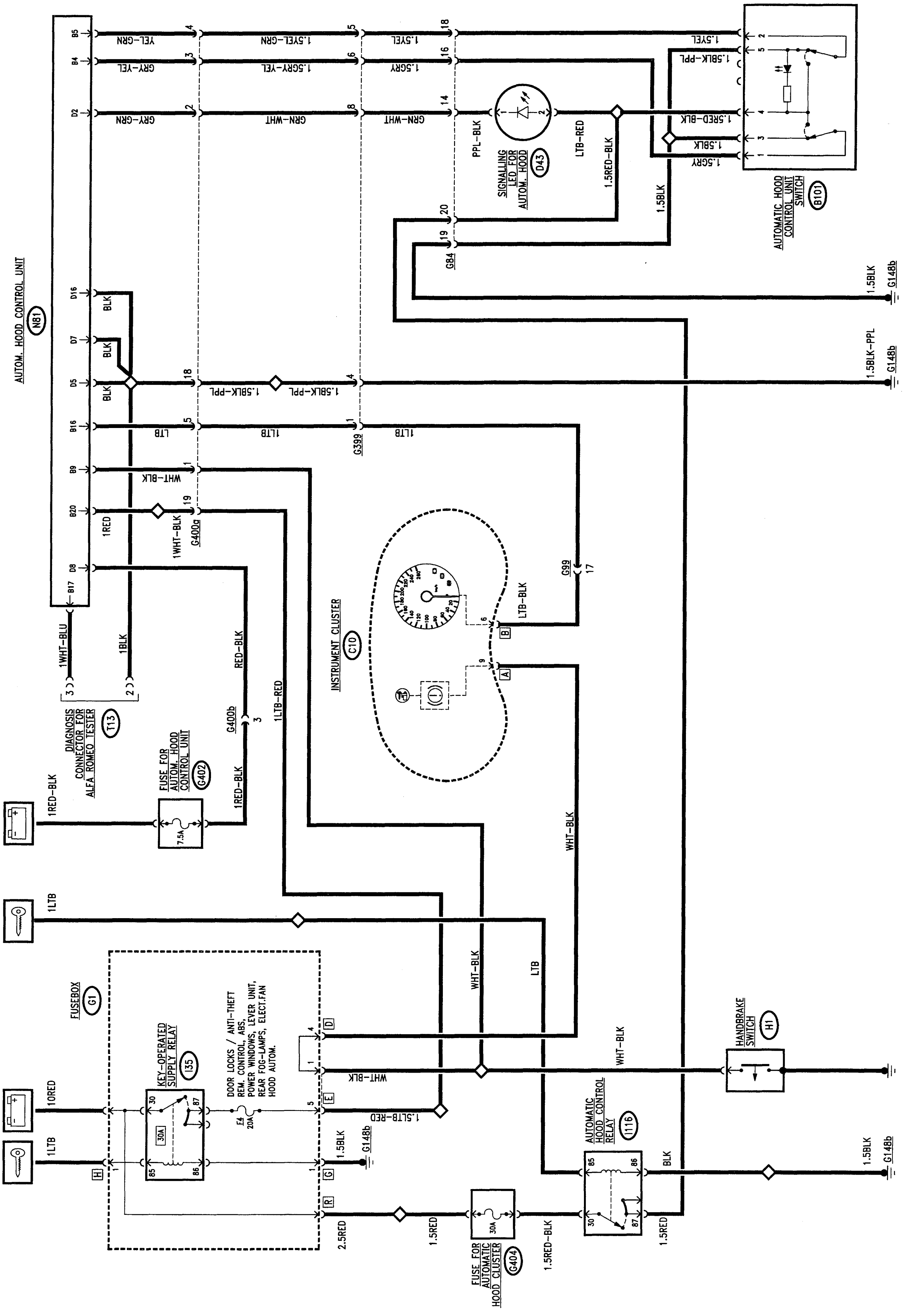

2. CONTROL SWITCHES

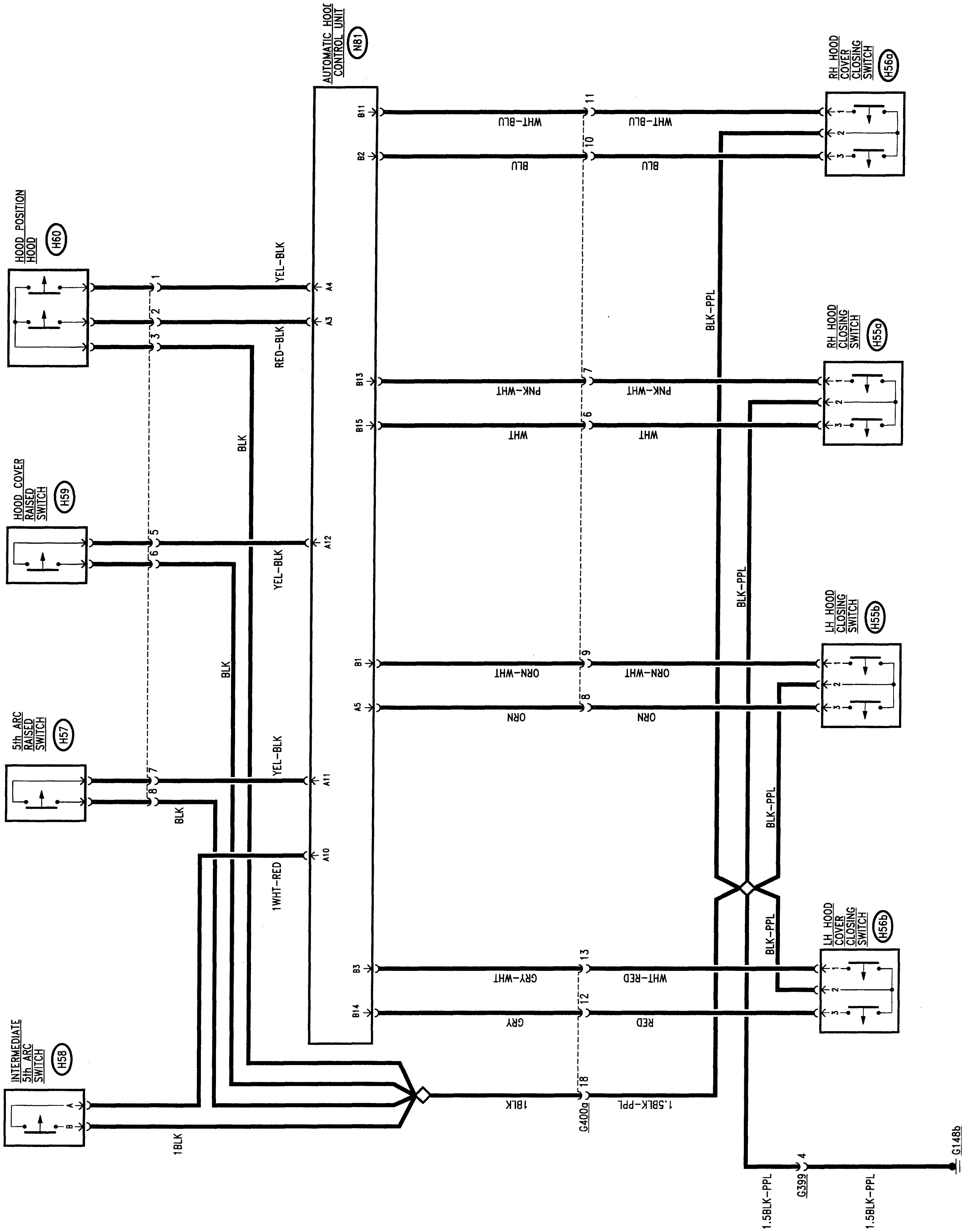

3. OPERATION OF LOCKS

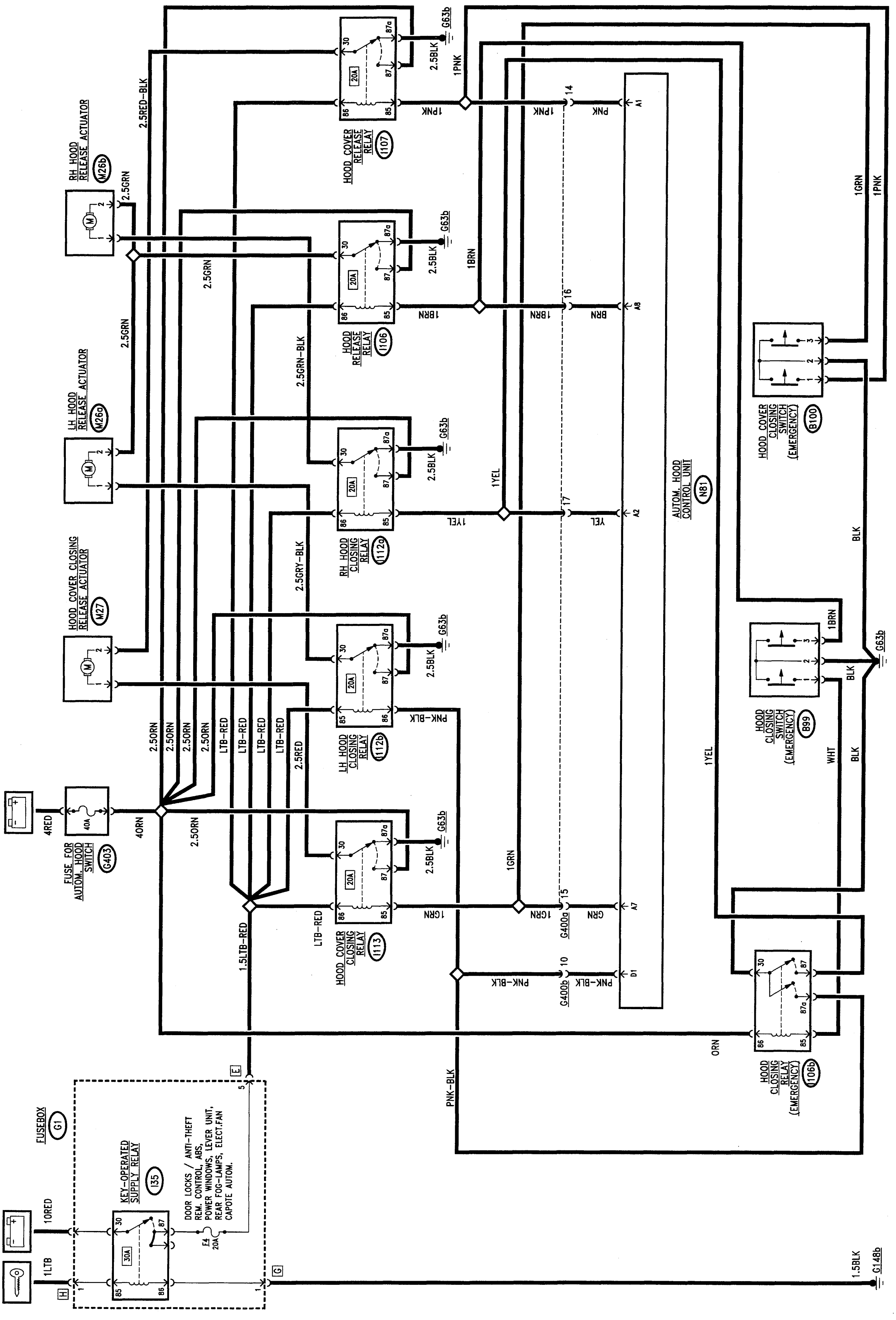

4. HYDRAULIC SYSTEM CONTROL

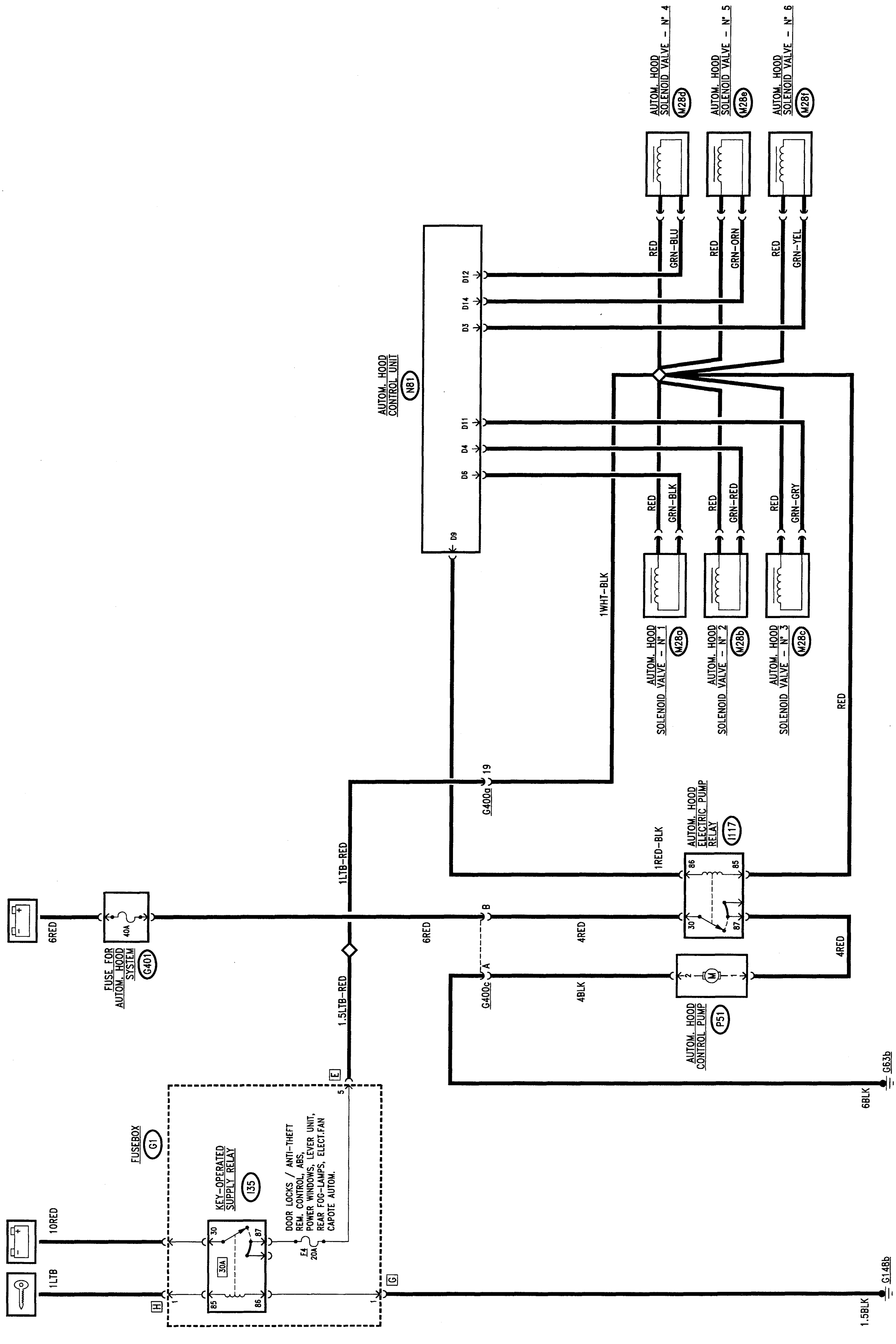

5. POWER WINDOWS CONTROL

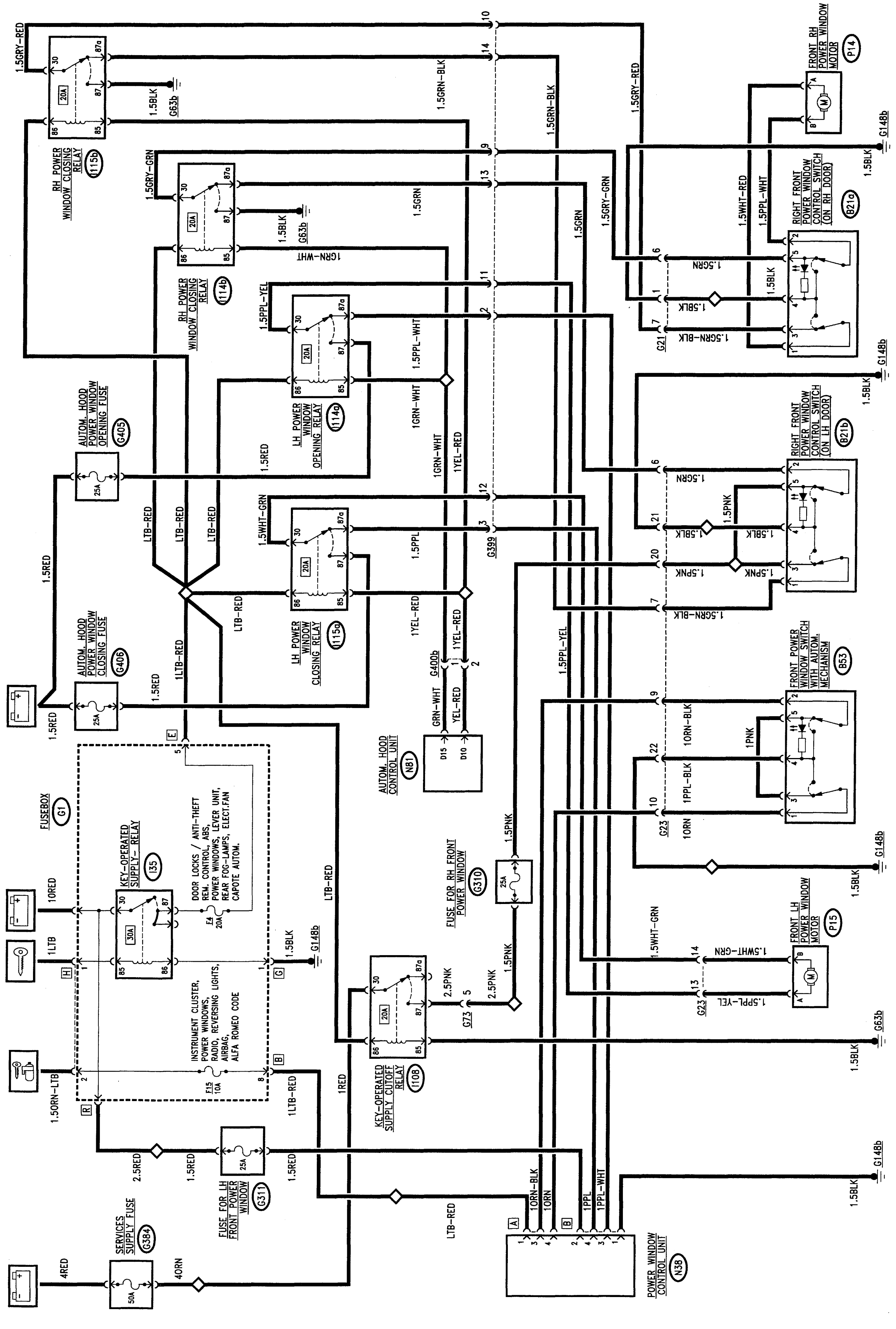

FUNCTIONAL DESCRIPTION

The electronic control unit **N81** controls the entire electrohydraulic system that automatically opens/closes the hood.

The control unit **N81** is supplied with 12V direct at pin D8 through the line protected by fuse **G402** (7.5A), and with "key-operated" 12V at pin B20 through the line of fuse **F4** of fusebox **G1**; pins D5, D7 and D16 are earthed.

Operation of the hood takes place pressing the special button **B101**, to be found on the centre tunnel. A 12V and an earth signal is sent alternately to indicate opening and closing: 12V to pin B4 (hood closing) and 12 V to pin B5 (hood opening); the 12V reach the "key-operated" switch through the hood control relay **I116** and fuse **G404** (30A).

Next to the button there is a luminous led **D43** supplied with "key-operated" 12V like button **B101**, and turned on by the control unit, from pin D2, to indicate that the system is working correctly or the occurrence of faults.

The control unit receives a series of consent signals from the switches and from the other systems of the car.

The "handbrake engaged" signal reaches pin B9 : this is the same signal that switch **H1** sends to the warning light on the instrument cluster **C10.**; pin B16 receives the tachometric signal picked up especially from the cluster **C10.**

Two sets of switches are located on the locks of the hood and hood cover and on the hood operating cylinders.

NOTE : all the switches are N.O. and, if they are closed, they send an earth signal to the control unit.

The switches on the lock of the left-hand hood **H55b** and the right-hand hood **H55a** send two earth signals: one indicates that the hood has approached the lock (signals to pin A5 and B15), the other that the lock is actually closed (signals at pin B1 and B13).

In the same way for the locks of the left-hand **H56b** and right-hand hood cover **H56a**, "approach" signals are sent to pin B14 and B2 and the closing ones to pin B3 and B11.

The hood cover raised switch **H59** is to be found on the left control cylinder and it signals the control unit - pin A12 - the maximum raising position.

The double hood position switch **H60** is located on the left control cylinder and signals the control unit the hood maximum raising position - pin A4 - and the maximum lowering position - pin A3.

The 5th arc raised switch **H57** is located on the left control cylinder and signals the control unit - pin A11 - the maximum raising position of the 5th arc.

The 5th arc intermediate switch **H58** (ball contact) is located on the control linkage in such a position as to signal the control unit - pin A10 - that the 5th arc is lowering so as to operate the lock motors.

As a result of the information received by the sensors, the control unit commands the locking and releasing of the locks of the hood and hood cover, and adjusts, through an electric pump and six solenoid valves, the hydraulic hood raising and lowering system.

The two hood locks (right and left) are controlled by two motors **M26a** and **M26b** which close or open the lock as the 12V/earth supply at the two terminals varies: this takes place via the hood release relay **I106** and the two hood closing relays **I112a** and **I112b**.

These are diverters which are energised by the "key-operated" line of fuse **F4** of fusebox **G1** and by a command signal leading from the control unit **N81**: respectively from pin A2 for closing the RH lock, D1 for closing the LH lock, and A8 for releasing the hood: if energised the relay reverses the supply on the motors, the direct supply of which leads from a special fuse **G403** (40A).

In the same way the hood cover lock - only one, in the central position - is controlled by motor **M27** which closes or opens the lock as the 12V/earth supply at the terminals varies: this takes place via the hood cover release relay **I107** and locking relay **I113**. These are diverters energised by the "key-operated" of fuse **F4** of fusebox **G1** and by a command signal leading from the control unit **N81**: respectively from pin A7 for closing the lock and A1 for releasing: if energised the relay reverses the supply on the motors, the direct supply of which leads from a special fuse **G403** (40A).

Two emergency switches make it possible to manually operate the hood, locking and releasing the locks. Switch **B100** corresponding to the hood cover lock sends an earth signal to the release relay **I107** or to the locking one **I113** in the same way as takes place through the control unit during automatic operation. Switch **B99** corresponding to the hood lock sends an earth signal to the release relay **I106** orto the locking relay **I112a** and **I112b**.

The control unit also controls the operation of the hydraulic circuit that controls the six pistons for raising/lowering the hood cover, 5th arc and the hood itself.

The electric pump **P51** pressurises the hydraulic operating fluid when it is supplied by the control unit **N81** via the power relay **I117**; this is supplied by the line of fuse **G401** (40A) and energised with the "key-operated" supply and by command signal of the control unit - pin D9.

The six solenoid valves which also receive the "key-operated" supply are controlled directly by the control unit:

- pin D6 controls solenoid valve no. 1 **M28a** (hood cover opening)
- pin D4 controls solenoid valve no. 2 **M28b** (hood cover closing)
- pin D11 controls solenoid valve no. 3 **M28c** (hood closing)
- pin D12 controls solenoid valve no. 4 **M28d** (hood opening)
- pin D14 controls solenoid valve no. 5 **M28e** (5th arc lowering)
- pin D3 controls solenoid valve no. 6 **M28f** (5th arc raising)

During the hood opening/closing sequence, the control unit **N81** also controls the raising or lowering of the door windows. This takes place via two relays for each window; the command signal for lowering the windows - pin D15 - energises two relays **I114a** and **I114b**, which receive the "key-operated" supply from the line of fuse **F4** of fusebox **G1**: there are two diverters which in the rest position "relay" the signal leading from the "normal" circuit of the power windows, which are thus operated manually through the switches **B53**, **B21a** and **B21b** and the control unit **N38** which controls the motors **P15** and **P14** (for further details, see the "Power windows" section). Conversely, if energised they control motors **P15** and **P14** directly, via a supply leading from a special fuse **G405** (25A).

In the same way they command signal of the control unit for highering the windows - pin D10 - energises two relays **I115a** and **I115b**, which receive the "key-operated" supply from the line of fuse **F4** of fusebox **G1**: there are two diverters which in the rest position "relay" the signal leading from the "normal" circuit of the power windows. Conversely, if energised they control motors **P15** and **P14** directly, via a supply leading from a special fuse **G405** (25A).

The control unit **N81** memorises any faults detected during operation: this information may be read using the ALFA ROMEO TESTER connected with the diagnosis socket **T13**, and the outgoing signal - line K - from pin B17 of the control unit itself.

LOCATION OF COMPONENTS (1/2)

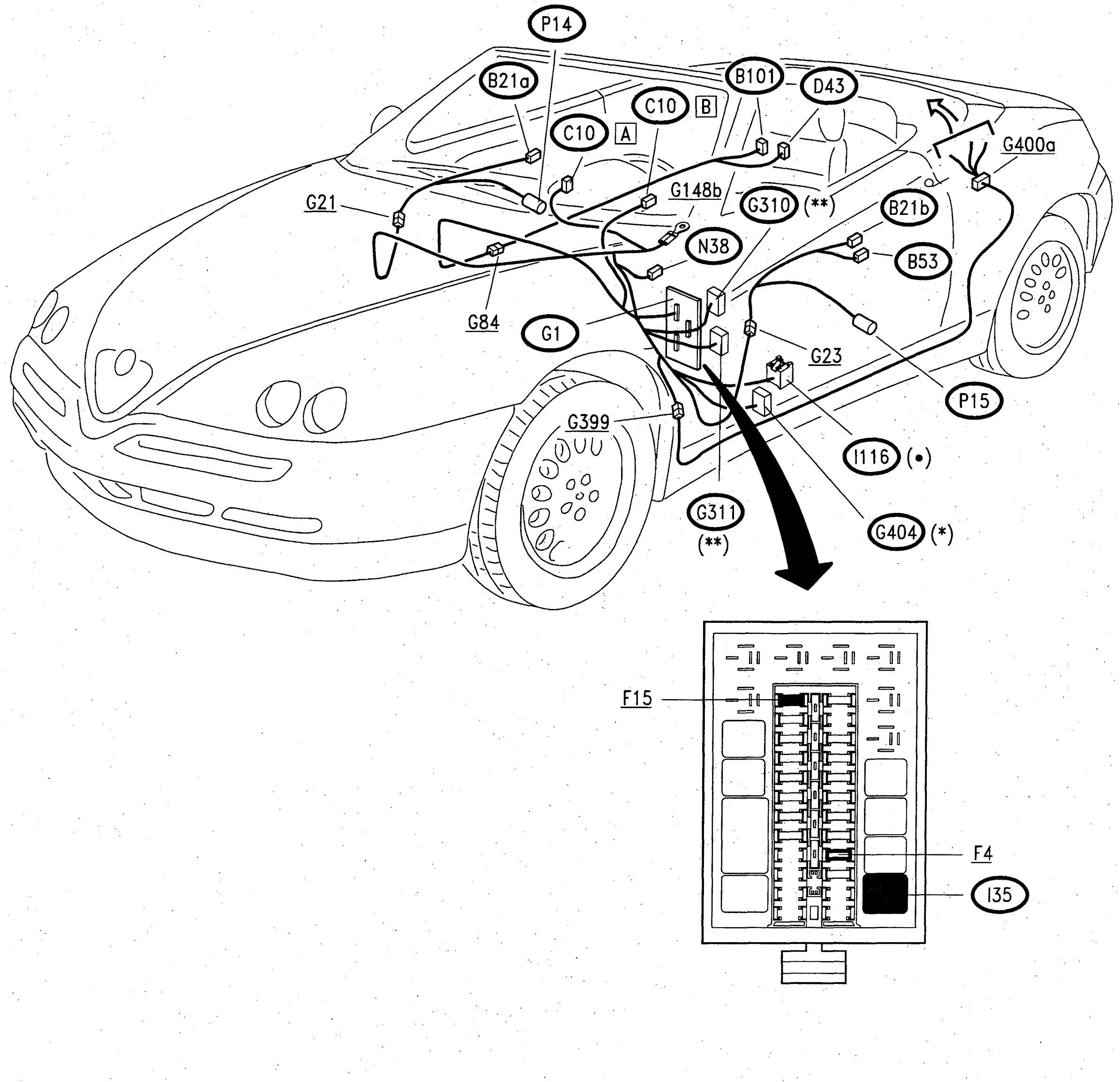

(•)	Green base
(*)	Green fuse holder
(**)	White fuse holder

LOCATION OF COMPONENTS (2/2)

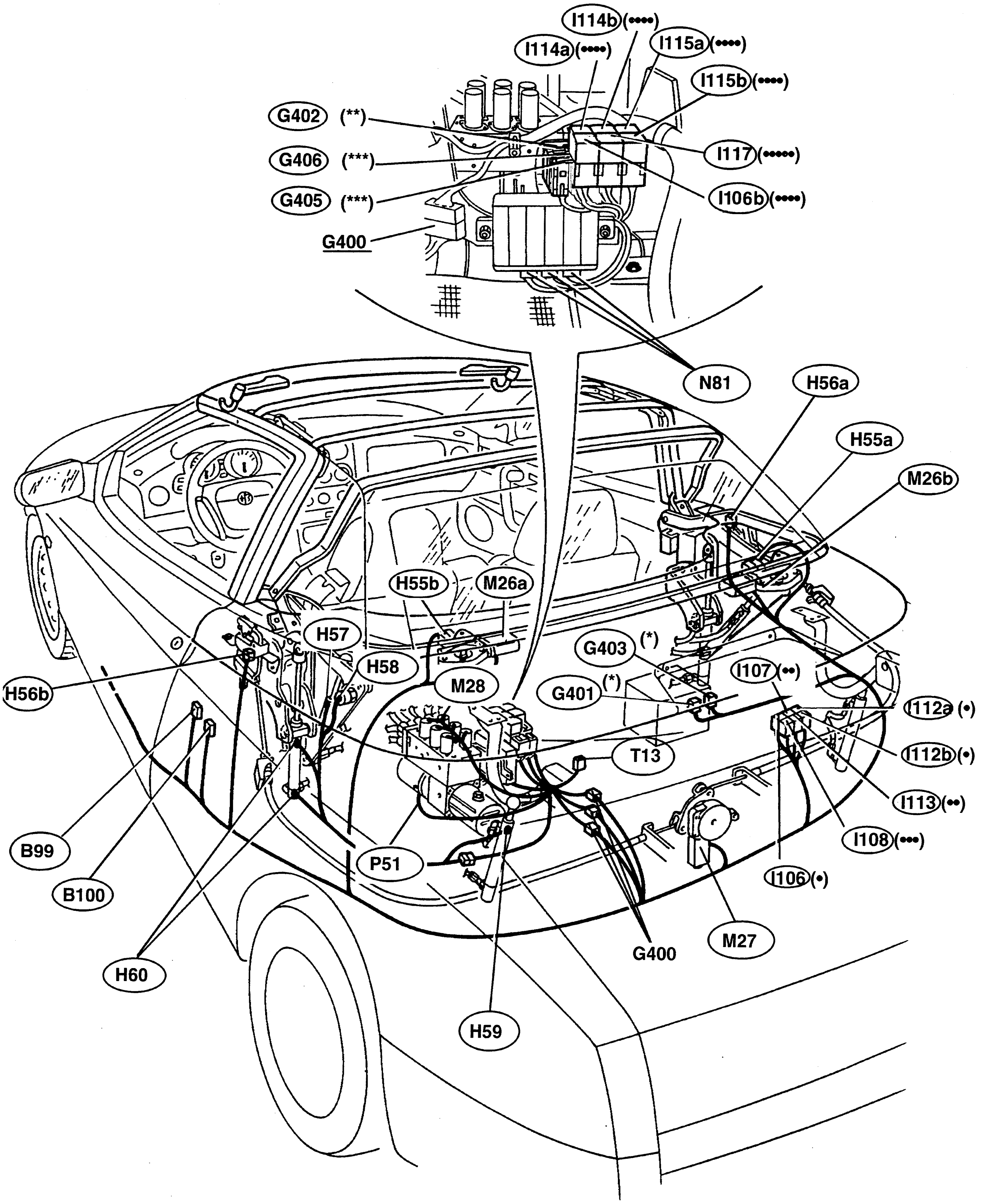

(•)	Red base
(••)	Brown base
(•••)	Blue base
(••••)	Grey base
(•••••)	Black base

(*)	Black fuse holder
(**)	Brown fuse holder
(***)	White fuse holder

FAULT FINDING

INITIAL TEST: turning the ignition key to MARCIA, the control unit carries out a self-diagnosis test of the entire system. If the result of this test is positive, the led at the side of the control button flashes for 1.5 seconds then goes off: conversely, if faults are detected, the led flashes for 10 seconds

- If the **led starts to flash**, this means that the system has memorised an operating fault. Try again moving the key to STOP and back to MARCIA, then proceed with Fault-finding as described in the following pages.

- If the **led flashes only with the button pressed**, this means that a manoeuvre error has been detected. For instance the handbrake has not been engaged.

- If the **led flashes upon completion of the operation**, or stays on permanently, this means that the hood is not correctly locked (open or closed).

The errors memorised may be "read" using the ALFA ROMEO TESTER connected to the diagnosis socket with the outgoing signal - line K - of the control unit itself.

When the control unit detects an error, the system is blocked and sets to "PAUSE":
this means that all the solenoid valves are supplied, while the pump is stopped: this way the hydraulic pistons are locked and the hood stops in the position in which it was. This lasts only 5 minutes (to avoid draining the battery), after which the valves are de-activated, but the led stays on.

In this case it is necessary to release the control button, press it again, or move the key to STOP, then back to MARCIA and press the button again.

Types of detectable errors:

- **sequence performance times too long**: each step of the operating sequences has a maximum available time: upon exceeding this limit the control unit detects an error and flashes the led;
- **input signal not consistent**: as the whole sequence is pre-programmed, the control unit detects an abnormal signal, i.e. unforeseen: for example certain signals must not change during a certain step of the sequence: in this case the control unit detects an error and flashes the led;
- **short circuit on output signals:** any short circuits or overloads on the outputs are detected: in this case it is necessary to move the key to STOP and then back to MARCIA: if the led flashes for 10 seconds and then goes off, the fault persists and it is necessary to carry out the fault-finding procedure using the ALFA ROMEO TESTER.
- **open circuit on output signals:** any open circuits or breaks on the outputs are detected: in this case the control unit detects an error and flashes the led;

POWER WINDOWS

INDEX

WIRING DIAGRAM

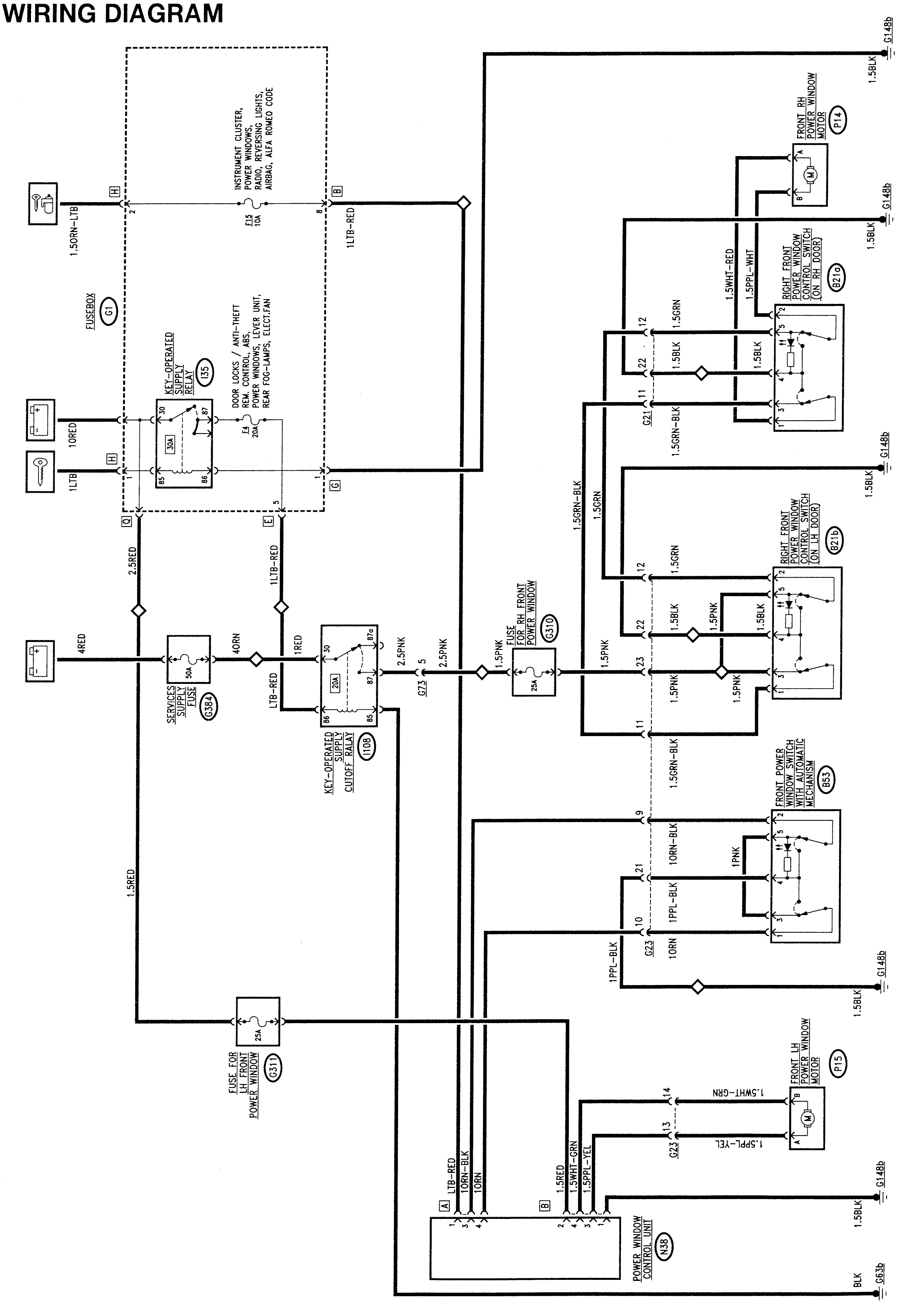

GENERAL DESCRIPTION

The operation of the left electric window (driver's side) is automatic, controlled by a control unit which actuates it according to the following logic:

- pressing the button and keeping it pressed (over 300 ms), the window opens or closes normally until the pushbutton is released;
- a short pulse (below appr. 300 ms.) operates the motor which automatically stops when the stop limit is reached (window open or closed completely);
- an even shorter pulse (less than appr. 50 ms.) is considered by the control unit as an accidental shock and no action will result.

This operating logic takes place through the "key-operated" supply". The electrical mechanism that operates the right front window is of the conventional type: when the button is pressed the window rises or drops; it is fitted with two control switches: one on the right-hand door and one on the left-hand door; in this case, too, operation is only possible with the ignition key engaged.

FUNCTIONAL DESCRIPTION

The power window control unit **38** is supplied at pin 2 of connector B by the battery voltage through wander fuse **G311** near the fusebox.
The "key-operated" consensus signal reaches pin 1 of connector A via fuse **F157** of **G1**.
The control signals for the upward and downard stroke respectively reach pins 4 and 3 of connector A from the left-hand window control switch **B53**.
In fact, this double switch sends an earth to the control unit from the part in which the contact has been closed (pin 1 = up; pin 2 = down).
The operating signals (up or down) leave pins 3 and 4 of connector B of **N38** for the left-hand window motor **P15:** 12 V and earth are inverted to change the direction of rotation
Pin 1 of connector B of **N38** is connected to earth.

Conversely, the operation of the right-hand motor is controlled directly by one of the two switches **B21** (**B21a** located on the right-hand door, **B21b** on the left) which are connected in series.
The "key-operated" supply passes through wander fuse **G310**, also located next to the fusebox. The righthand window motor **P14** is operated by one of the two switches **B21** in one direction or the other depending on the origin of the 12V or earth signal.

LOCATION OF COMPONENTS

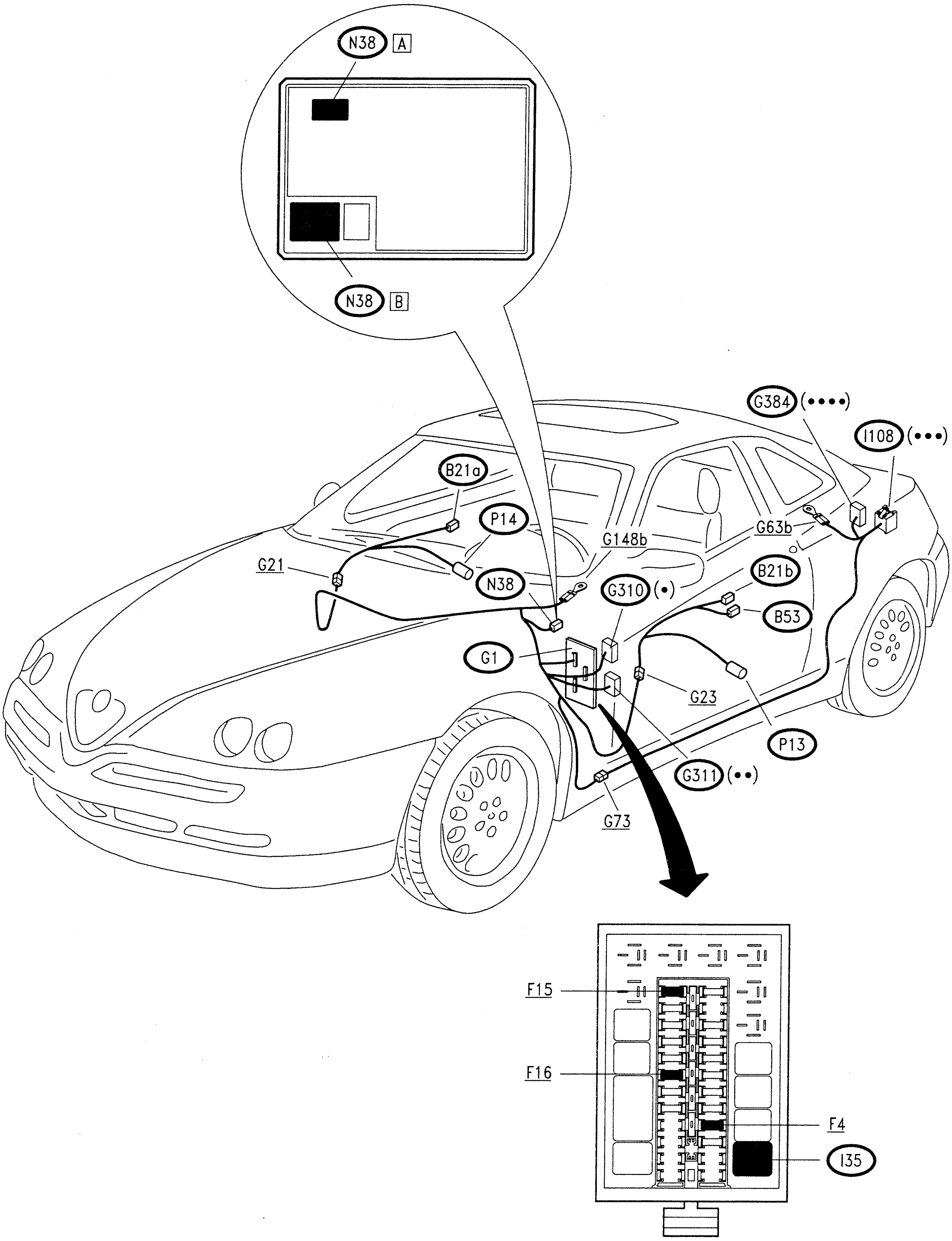

(•) White fuseholder
(••) White fuseholder
(•••) Blue base
(••••) Black fuseholder

FAULT-FINDING TABLE

Fault	Component to be checked								
	G310	G311	F15	P14	P15	N38	B53	B21a	B21b
LH power window, under all circumstances		●	●		●	●	●		
LH power window, automatic operation		●				●			
RH power window	●			●				●	●

CHECKING COMPONENTS

Power window control unit N38

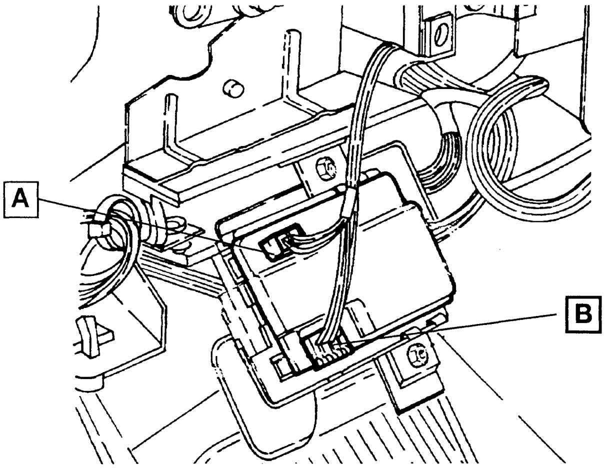

Checking the device: **test A**

Power window switches B21a B21b B53

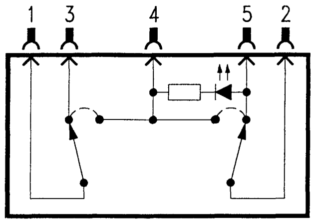

SPECIFICATIONS
Checking operation: **at rest** : continuity between pin 3 and 1 and between pins 2 and 5, a.c. between the other pins operating **up** button: continuity between pins 4 and 1; a.c. between the other pins operation **down** button: continuity between pins 4 and 2; a.c. between the other pins

CHECK POWER WINDOW CONTROL UNIT N38

TEST A

Work with the component fitted on its connector, from the cable inlet side

TEST PROCEDURE		RESULT	CORRECTIVE ACTION
A1	CHECK VOLTAGE – Check for 12V between pins 2 and 1 of connector B of **N38**	OK ►	Carry out **step A2**
		~~OK~~ ►	Check wander fuse **G311**. Restore the wiring between **N38 B** and **G311** and between **N38 B** and earth **G148b**
A2	CHECK VOLTAGE – With the key turned to MARCIA, check for 12V between pin 1 of connector B and pin 1 of connector A of **N38**	OK ►	Carry out **step A3**
		~~OK~~ ►	Check fuse **F15** of **G1**. Restore the wiring between **N38 A** and **G1**
A3	CHECK MANUAL OPERATION – Operating the switch of the driver's side front window **B53,** check for 12V between pins 3 and 4 of connector B of **N38**; this voltage ceases as the action of the pushbutton ceases	OK ►	Carry out **step A5**
		~~OK~~ ►	Carry out **step A4**
A4	CHECK MANUAL OPERATION – Operating switch **B53**, check for a voltage of 12V between pins 3 and 4 of connector A of **N38**	OK ►	Change device **N38**
		~~OK~~ ►	Restore the wiring between **N38 A** and switch **B53**, or change the latter
A5	CHECK AUTOMATIC OPERATION – With the key turned to MARCIA, operating switch **B53** check for: • continuous 12V between pins 3 and 4 of connector B if the button is pressed for less then 300 ms • no voltage if the button is pressed for less than 50 ms • continuous 12V between pins 3 and 4 of connector B keeping the button pressed	OK ►	DEVICE **N38** NOT WORKING PROPERLY. Check the connections with the other components
		~~OK~~ ►	Change device **N38**

HEATED REARSCREEN AND WING MIRROR DEFROSTING AND ADJUSTMENT

INDEX

WIRING DIAGRAM

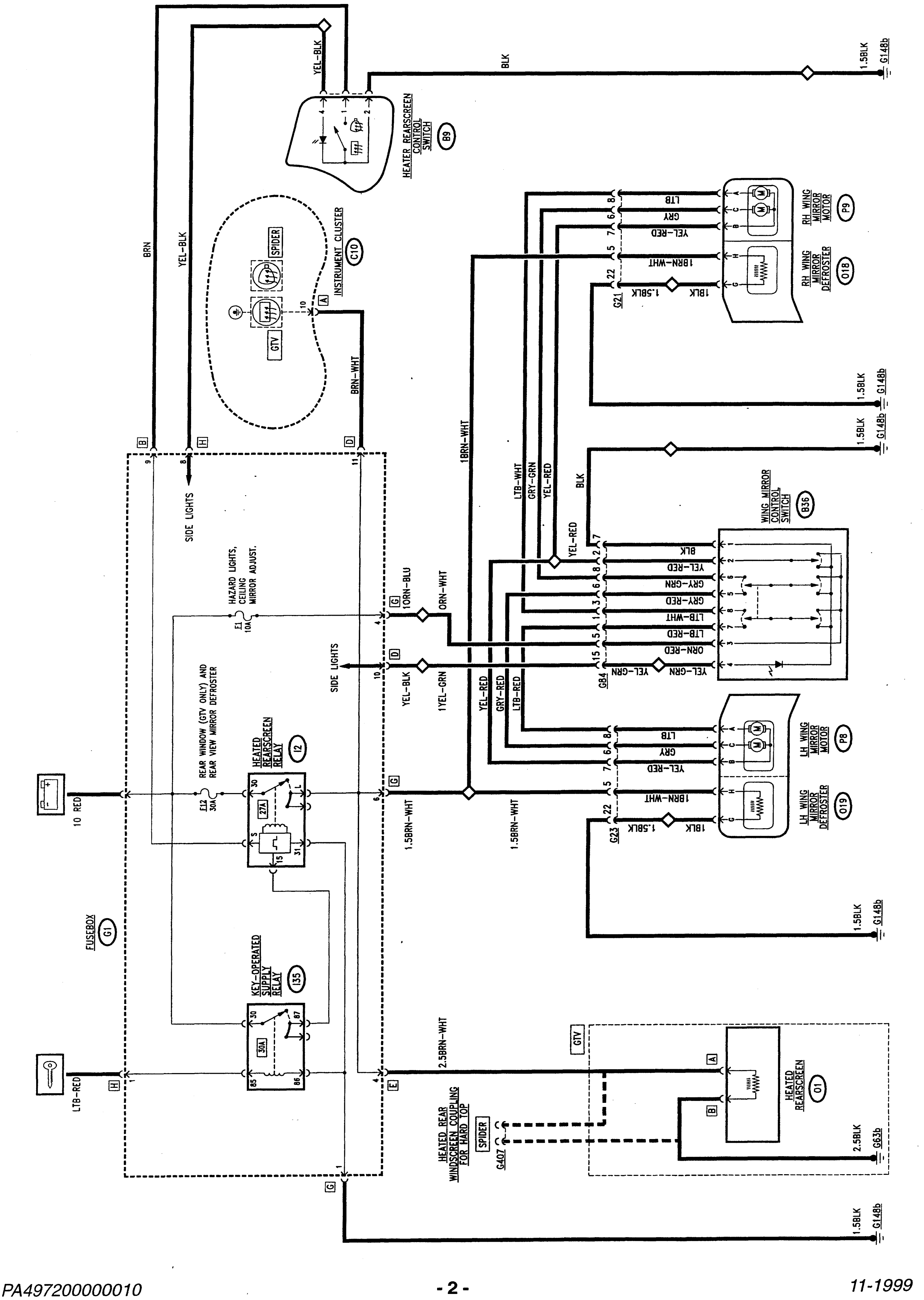

GENERAL DESCRIPTION

Defrosting

The rearscreen **(GTV only)** and wing mirrors incorporate a wire that heats the surfaces it contacts when it is crossed by current, thereby quickly demisting and/or defrosting them.
The device is actuated by pressing the corresponding switch on the panel which controls the heated rearscreen relay.
A warning light on the instrument cluster indicates when the device is operating.

For SPIDERS with a Hard Top, there is a special socket for connecting the rear windscreen incorporated in the actual Hard Top, located on the left panel.

Actuation of the heated rearscreen also turns on the wing mirror defrosting function.

N.B. The ideogram in the switch and on the warning light is different for the GTV ⊞ which also includes the rearscreen and for the SPIDER ⊜ which involves the wind mirrors only.

Wing mirror adjustment

The two wing mirrors are adjusted through the switch that operates two electric motors in each of the two mirrors (one motor turns the mirror on a horizontal axis, the other on a vertical axis.

A single switch operates both the left-hand and right-hand mirrors, as a selector makes it possible to switch from one to the other.

FUNCTIONAL DESCRIPTION

Defrosting

The line of fuse **F12** of fusebox **G1** supplies the rearscreen heating relay switch **I2**, the coil of which is supplied from the ignition switch and energized by an earth signal leading from switch **B9** ⊞ or ⊜ .
Relay switch **I2** to be found in fusebox **G1**, includes an electronic timing device which turns off the device after 20 minutes from the first time it is turned on and after 10 minutes if it is turned on again.

When the contact of relay switch **I2** closes the battery voltage supplies the line, which reaches the rearscreen heating **O1** (GTV only) and the resistances of the wing mirrors **O19** (left) and **O18** (right).
For SPIDERS, the supply is sent to socket **G407** to which the Hard Top is connected.
The same rearscreen supply signal is also sent to the instrument cluster **C10** to turn on the corresponding warning light.

Wing mirror adjustment

The double switch **B36** controls the two electric mirrors in the mirrors **P8** (left) and **P9** (right).
The switch is supplied with direct voltage - pin 3 - which crosses fuse **F1** of the fusebox **G1**; pin 1 is earthed.
Operating switch **B36** in one direction or in the other one of the motors receives positive and earth, in addition to the shared signal - pin 2, thereby determining the direction of rotation. Depending on the position of the selector, the right-hand motor **P9** (signals from pins 6 and 8 of **B36**) or the left-hand motor **P8** (signals from pins 5 and 7 of **B36**) is connected; the switch is illuminated by a led which is turned on when the sidelights are on (pin 4).

LOCATION OF COMPONENTS

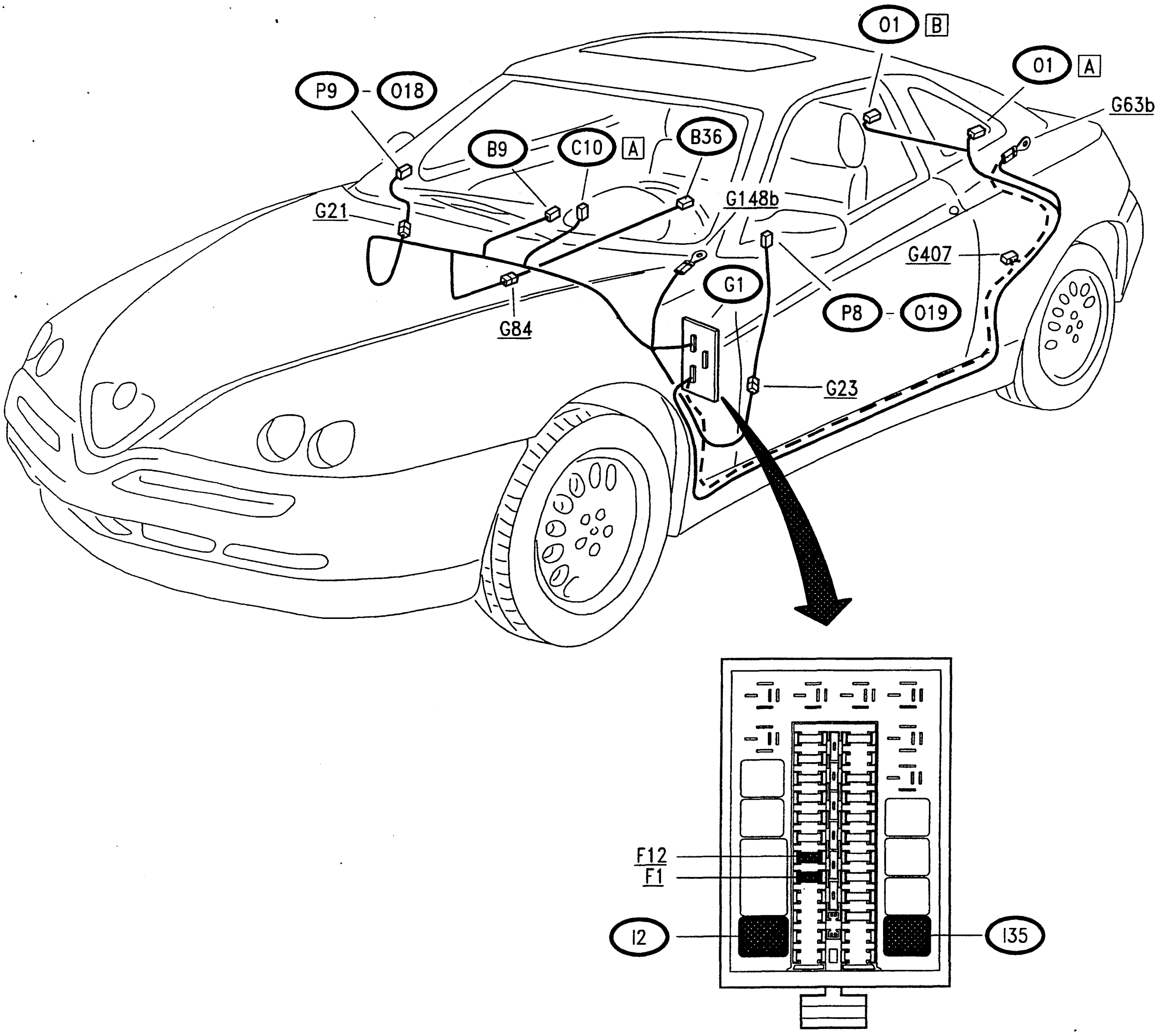

– – – Spider with "Hard Top"

FAULTFINDING TABLE

Failure	Component to be checked										
	E12	I2	B9	O1	O19	O18	C10 (1)	F1	P8	P9	B36
Defrosting, under all circumstances	●	●	●								
Rearscreen defrosting (GTV only)				●							
LH wing mirror defrosting					●						
RH wing mirror defrosting						●					
Rearscreen warning light							●				
Wing mirror adjustment, under all circumstances								●			●
LH wing mirror adjustment									●		●
RH wing mirror adjustment										●	●

(1) The instrument cluster **C10** cannot be repaired. Therefore, in the event of a failure it is not possible to change the single warning light and a new, complete cluster must be fitted.

CHECKING COMPONENTS

Heated rearscreen relay I2

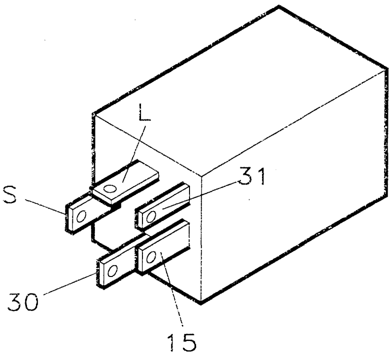

check device: see **test A**

Wing mirror (O18-P9) (O19-P8)

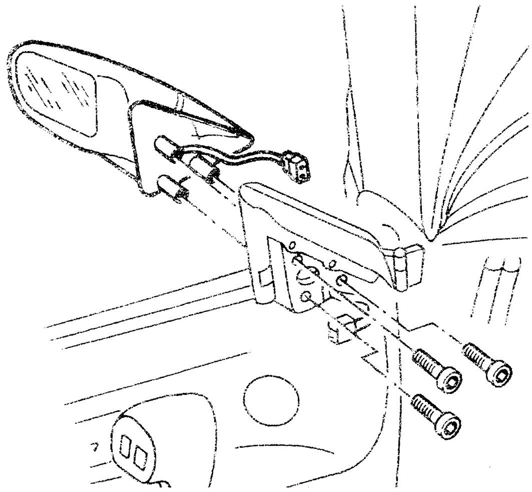

SPECIFICATIONS	
Defrosting resistance (between pins G and H of the connector)	10 Ω

SPECIFICATIONS	
rotation upwards	12V at pin C, earth at pin B
rotation downwards	12V at pin B, earth at pin C
rotation rightwards	12V at pin B, earth at pin A
rotation leftwards	12V at pin A, earth at pin B

Double wing mirror control switch (B36)

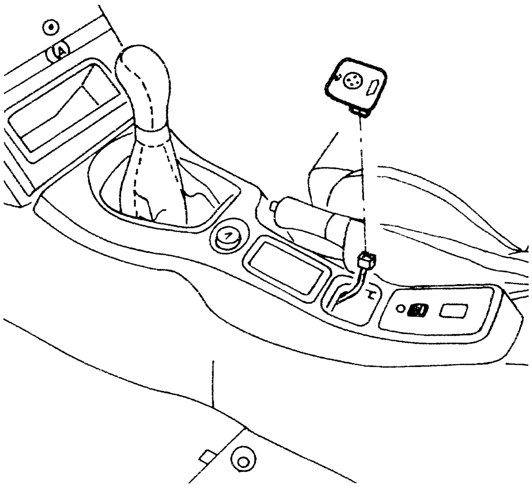

Checking the device: see **test B**

CHECK REARSCREEN RELAY (I2)	TEST A

TEST PROCEDURE		RESULT	CORRECTIVE ACTION
A1	CHECK VOLTAGE – Disconnect device **I2** and check on the base of fusebox **G1** for: 12V between pins 30 and 31. With the key at MARCIA: check for 12V between pins 15 and 31	OK ▶	Carry out **step A2**
		~~OK~~ ▶	Check fuse **F12** of **G1**. If necessary check relay **I35**
A2	CHECK CONTROL SIGNAL – Insert rearscreen defrosting: check earth at pin S of I2	OK ▶	Insert device **I2** on the base of **G1** and continue with **step A3**
		~~OK~~ ▶	Restore the wiring between **G1** and switch **B9**
A3	CHECK DEFROSTING CONTROL – Insert rearscreen defrosting: check 12V between pin 1 and 6 of connector G of **G1**: this voltage disappears after 20 minutes	OK ▶	DEVICE **I2** WORKS PROPERLY. Check other components.
		~~OK~~ ▶	Replace relay **I2**

CHECKING DOUBLE WING MIRROR CONTROL SWITCH (B36) — TEST B

TEST PROCEDURE		RESULT	CORRECTIVE ACTION
B1	CHECK VOLTAGE – Check for 12V between pins 1 and 3 of **B36**	OK ▶	Carry out **step B2**
		~~OK~~ ▶	Check fuse **F15** (15A). Restore the wiring between **B36** and fusebox **G1** and earth **G148b**.
B2	CHECK VOLTAGE – With the side lights on, check for 12V at pin 4 of **B36**	OK ▶	Carry out **step B3**
		~~OK~~ ▶	Check that the side lights are working properly; also check the wiring between **B36** and **G1**
B3	CHECK VOLTAGE – Set the selector to the position for operating the **left** mirror and check: - 12V between pins A and B of mirror **P9** moving the switch rightward and leftward - 12V between pins B and C of mirror **P9** moving the switch upwards and downwards In the same way, moving the **right** mirror check: - 12V between pins A and B of mirror **P8** moving the switch leftward and rightward - 12V between pins B and C of mirror **P8** moving the switch upward and downward	OK ▶	THE SWITCH IS WORKING CORRECTLY. Check the connection with the other components
		~~OK~~ ▶	Carry out **step B4**
B4	CHECK VOLTAGE – Set the selector to the position for operating the **left** mirror and check on **B36** for: - 12V between pins 7 and 2 moving the switch leftward and rightward - 12V between pins 5 and 2 moving the switch upward and downward In the same way, operating the **right** mirror check for: - 12V between pins 8 and 2 moving the switch leftward and rightward - 12V between pins 6 and 2 moving the switch upward and downward	OK ▶	Restore the wiring between **B36** and **P9** (RH) or **P8** (LH), or change one of the two motors
		~~OK~~ ▶	Change switch **B36**

HEADLAMP AIMING DEVICE

INDEX

WIRING DIAGRAM

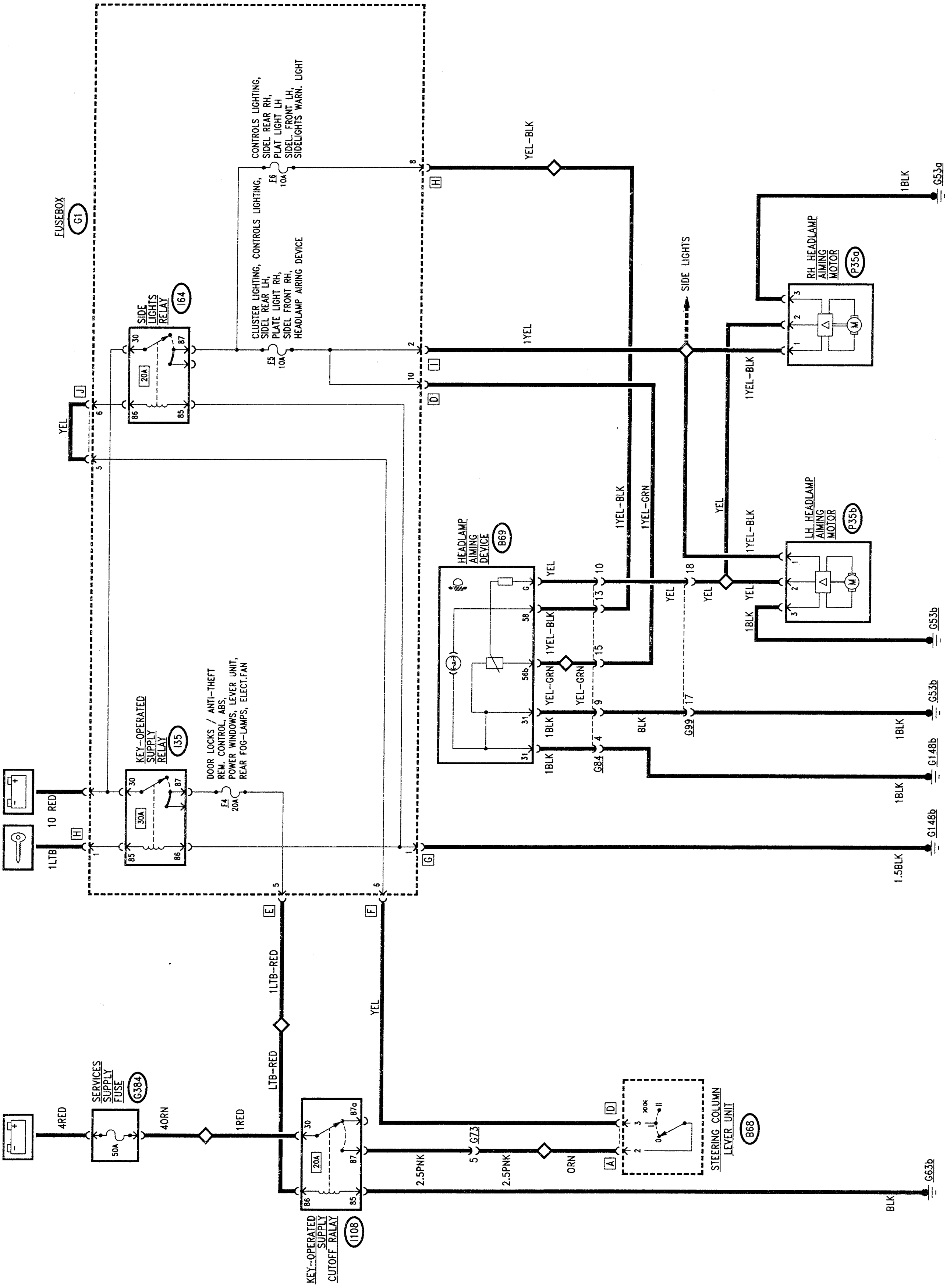

GENERAL DESCRIPTION

The car offers the possibility to adjust the headlight beam in relation to the load directly from the driver's seat.
In this way the problem or invonveniences caused by incorrect headlamp aiming is avoided and the delicate task of direct lamp adjustment is simplified (this is not substituted by the electrical device but integrated with it).

The adjustment device consists of a motor fitted on each of the two headlamps which suitably slopes them to lower the beam when the car is heavily loaded and raise it when the load is lightened.
The driver operates the system directly by turning a knob on the the centre console, which allows four positions to be chosen according to the following table:

Position of knob	**Load conditions**
0	driver only or driver and passenger on front seat
1	all seats occupied
2	all seats occupied plus load in luggage compartment (until reaching max.allowed load on rear axle)
3	driver plus load in luggage compartment until reaching max. allowed load on rear axle)

The system can be operated only when the side lights are on; it is completely de-activated when they are off.

NOTE: for safety reasons the system is designed so that in the event of a failure it cannot be moved to a higher position than the one it is already at.

FUNCTIONAL DESCRIPTION

The headlamp aiming device **B69** is supplied at pin 56b by a line leading from the side lights circuit from fuse **F5**: this line receives voltage only when the side lights are on.
The same supply (pin 58) turns on the led inside device **B69** itself which illuminates the ideogram identifying the function.
Pins 31 of device **B69** are earthed, while the adjustment signal obtained by pressing the four-position selection knob leads from pin G. This signal varies the output voltage through a potentiometer (100% voltage at position "0"; with voltage decreasing for the successive positions).

Motors **P35a** and **P35b** are formed by a motor in the strict sense of the word controlled by a transducer and an electronic control unit which establishes the stroke on the basis of the voltage of the adjustment signal reaching pins 2, from device **B69**.
The devices are supplied at pins 1, by the same line as fuse **F5**, while pins 3 are earthed.

LOCATION OF COMPONENTS

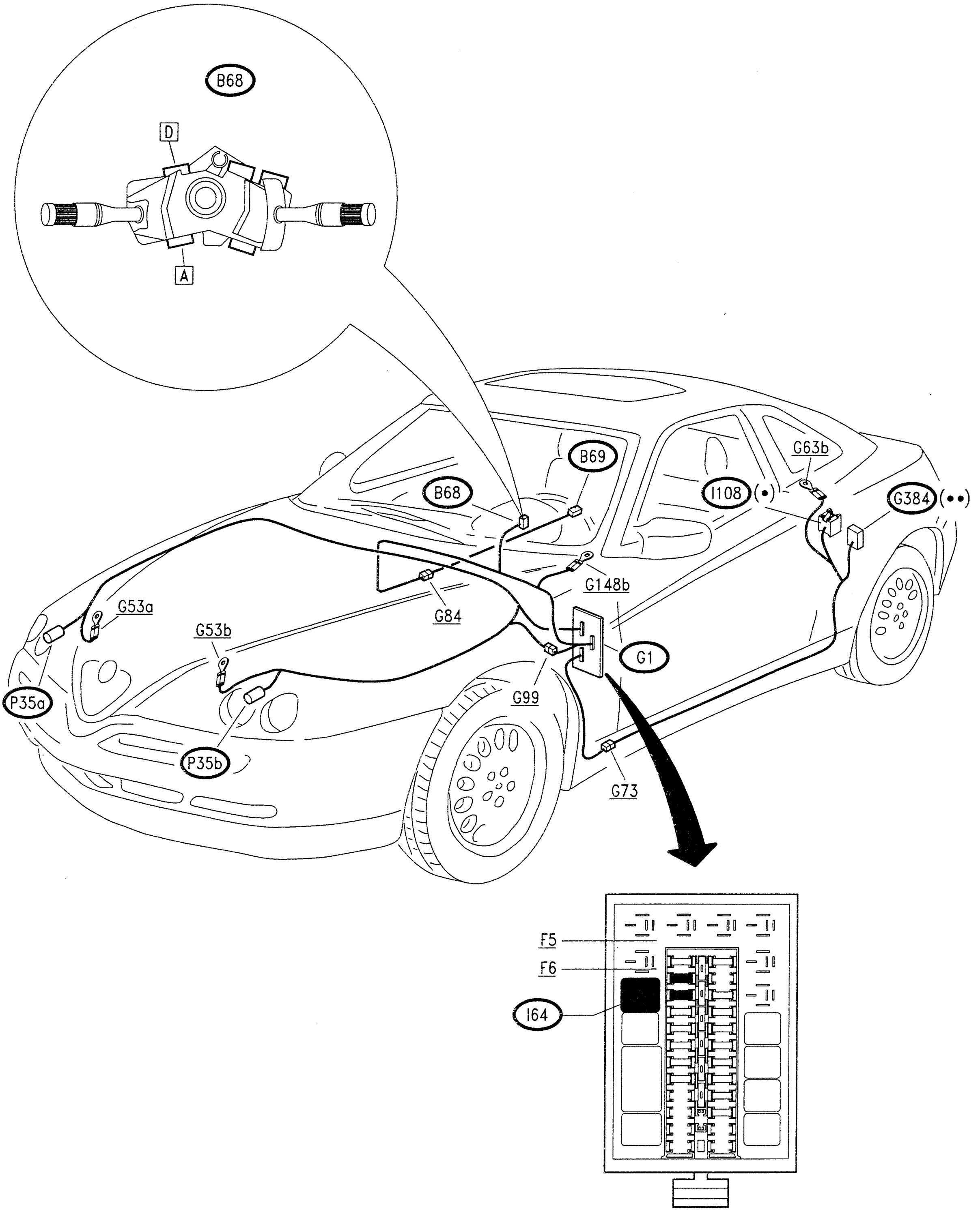

(•) Blue base
(••) Black fuseholder

FAULTFINDING TABLE

Failure	Component to be checked				
	F5	F6	P35a	P35b	B69
Complete adjustment	•				•
RH headlamp aiming device			•		
LH headlamp aiming device				•	
Control device lighting		•			•

CHECKING COMPONENTS

RH/LH hedlamp adjustment motor P35a P35b

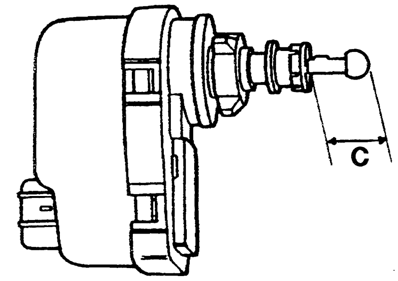

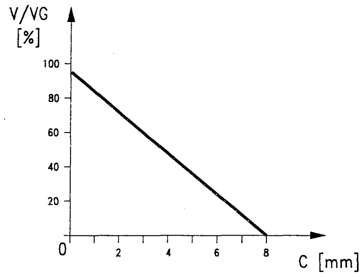

Operating diagram: course of stroke C in relation to the voltage V/VG

V = voltage between pin 56b and pin 31 (12V)

VG = voltage between pin G and pin 31

Headlamp aiming device B69

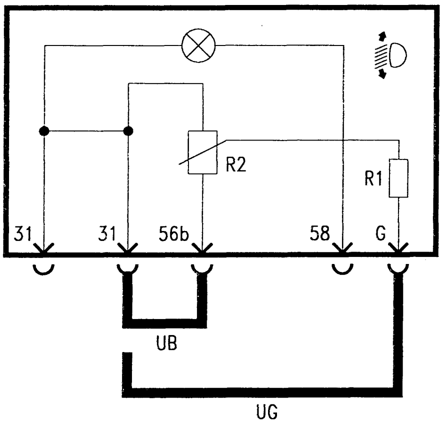

SPECIFICATIONS	
R1	390 Ω ± 2%
R2	4.7 kΩ

Knob position	Voltage between terminals G and 31 (UG)
0	94.9% UB ± 3%
1	88.3% UB ± 7%
2	82.7% UB ± 7%
3	75.1% UB ± 7%
4	51.2% UB ± 7%

(UB: voltage between pins 31 and 56b = 12V)

TOWING ARRANGEMENT

INDEX

WIRING DIAGRAM

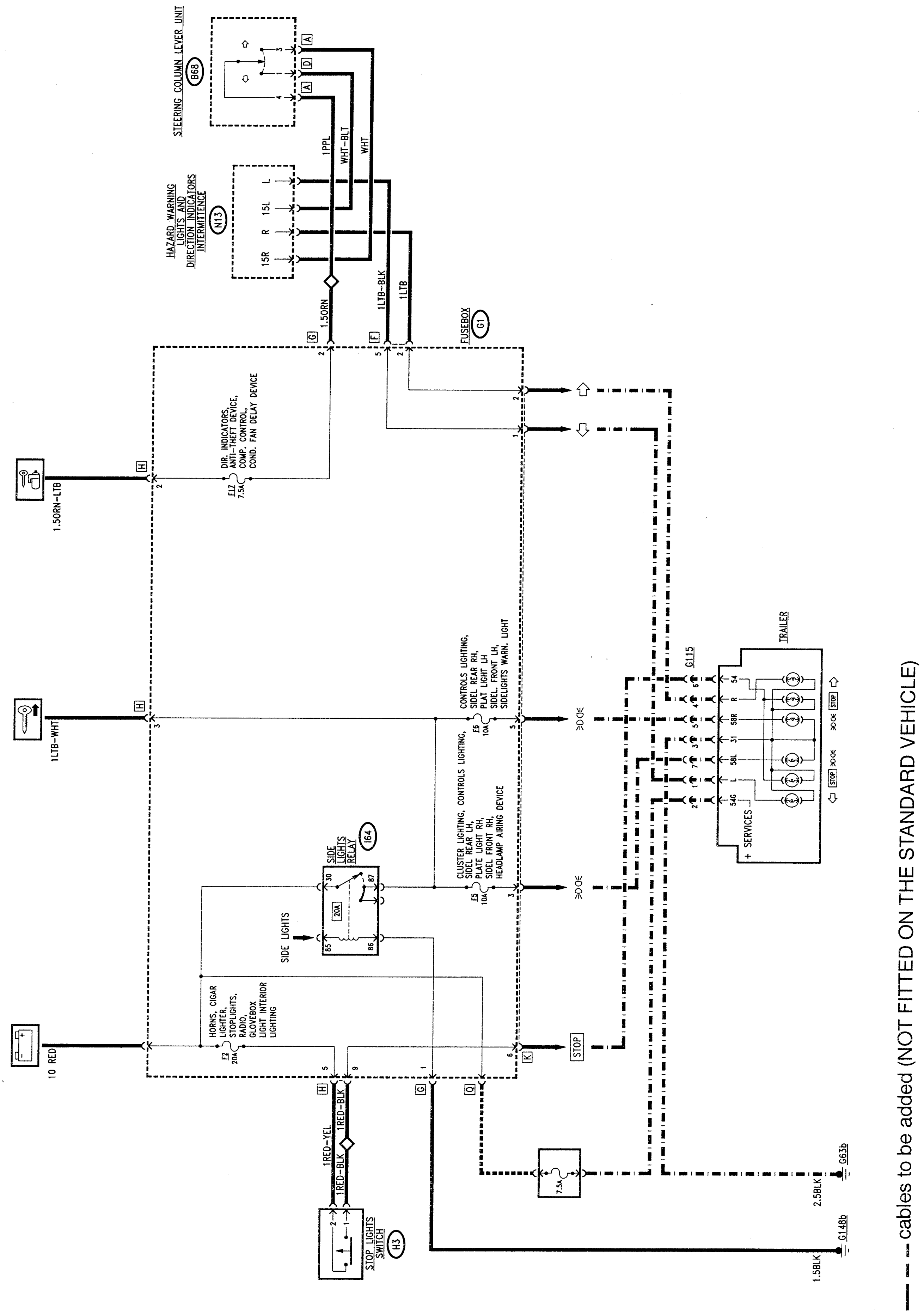

— — cables to be added (NOT FITTED ON THE STANDARD VEHICLE)

GENERAL DESCRIPTION

The fusebox **G1** is fitted with a special connector (**connector K**) provided with all the lines needed for connecting the trailer. Following the indications of the wiring diagram, connect this connector with the socket for the tow hook **G115** which is then connected with the standardized connector on the trailer.

WARNINGS:
For connection with the trailer a 7-pole 12V connector must be used according to CUNA - UNI 9128 Standards.

The socket must then be connected with a direct supply - in this case protect the line with a special fuse - and with an earth.

When making the connections on the car adhere to the following precautions:

- avoid interferences between electrical cables and the exhaust pipe
- protect any holes for passing the cables with appropriate grommets;
- connect the car earth with the trailer earth through the 7-pole connector using a 2.5 sq.mm cable.
- replace the direction indicator electronic intermittent device **N13** with one of higher capacity, to withstand the additional load of two 21W bulbs.

With the exception of the regulation warning devices - and an electric brake that must be directly supplied from the battery, using a cable of no less than 2.5 sq.mm and a 30A fuse - **it is prohibited to connect the services installed on the trailer to the car's electric system** (fan, fridge, interior lighting, etc.), with the exception of a light bulb with a power rating of no more than 15W.

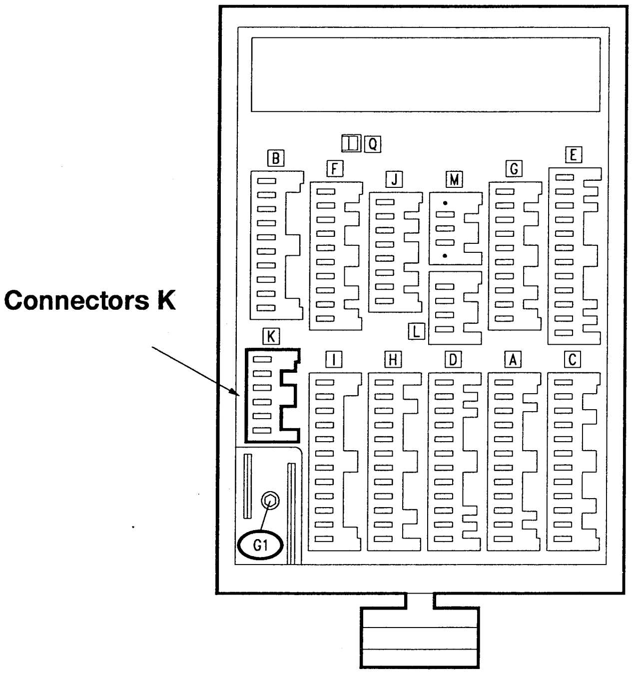

SAFETY SYSTEM AIR BAG AND PRETENSIONERS

INDEX

SAFETY SYSTEM AIR BAG AND PRETENSIONERS

This car is fitted with an electronic safety system which, in the event of an impact, operates one or two Air Bags and two safety belt pretensioners.

The **AIR BAG** is a passive safety device formed of one or two cushions which automatically inflate between the body of the occupants of the front seats of the vehicle and the front structures of the passenger compartment, in the event of a head- on crash.

The safety belts **PRETENSIONER** is a pyrotechnic device integrated in the safety belt buckle, which operates in the event of a head-on collision taking up the inevitable slack in the belts caused by the action of the weight of the body or its adherence to the seat back.

The system as a whole comprises the following components:

1. Electronic control unit.
2. .Driver's side Air Bag module.
3. Passenger's side Air Bag Module.
4. Safety belt pretensioners.
5. Warning light on the instrument cluster that indicates any faults and the diagnosis code
6. Connector for the ALFA TESTER.

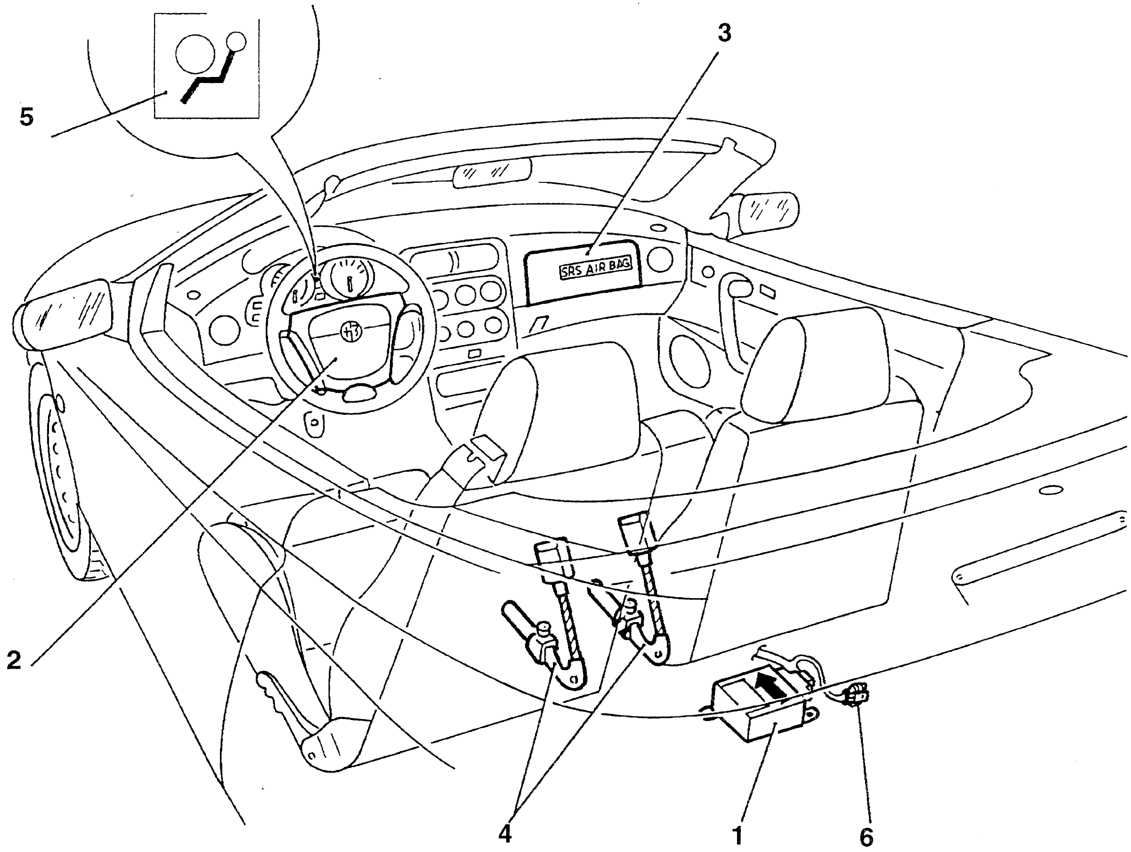

The electronic control unit is equipped with suitably calibrated deceleration sensors, through which it detects a collision situation and triggers the reaction of a chemical compound which produces nitrogen through two electric detonators. The gas inflates the two synthetic fibre cushions respectively housed at the centre of the steering wheel and in a compartment of the dashboard in front of the passenger.

Simultaneously, the control unit triggers the pretensioners which prevent the belts from unreeling by a piston operated by a gas generator which pulls the steel cable fastening the buckle.

SAFETY RULES TO BE FOLLOWED FOR OPERATIONS ON CARS FITTED WITH AIR BAG SYSTEM

✖ **Below we are giving some rules which MUST BE STRICTLY ADHERED TO during any type of operation concerning vehicles fitted with Air Bag safety systems.**

PRELIMINARY RULES

You are reminded that Air Bag modules should be handled with care. The use, transport and storage of them are ruled by the following procedures for handling these components.

- Before starting to carry out:
  - body repair work;
  - welding operations;
  - work requiring the removal of Air Bag modules or the control unit.
- Remove the key from the ignition switch
- Always disconnect the battery, i.e.: disconnect the two terminals from their posts and isolate them taping carefully.
- Disconnect the control unit connector waiting at least 10 minutes after disconnecting the battery.
- When removing one of the inflating devices, closely follow the procedure given below:

1. Wait for at least 10 minutes after disconnecting the battery before starting to disassemble the module.
2. Slacken the fastening screws.
3. Disconnect the coupling of the inflation devices
4. Store the devices with the cover upwards in a key-locked metal cabinet. This cabinet, to be used only for this purpose, must never be used for storing any other type of material, especially if inflammable. The cabinet must possess all the requisites foreseen for containing pyrotechnical charges (shockproof metal cabinet with air vents to allow natural ventilation inside) and it must be labelled according to the laws in force (DANGER EXPLOSIVES - USE OF NAKED FLAMES PROHIBITED - DO NOT OPEN UNLESS DULY AUTHORISED).

- All the connectors used and wired on Air Bag modules contain a short circuit clip, until the moment in which the Air Bag modules are connected to a suitable power source through the appropriate connector there is no possibility of unduly activating the units.

⚠ A component of the system that was not activated during an accident is to be considered still "active" therefore unexploded components due to faults or guarantee expiry or other causes which make their replacement necessary must be returned to the special centre following the procedure described below

✖ Assembly and disassembly of components of the safety system must be carried out SOLELY by competent, authorised technical staff.
The failure to abide by the instructions herein may involve undesired activation of the system, personal injury or unneccessary system repairs.
IT IS STRICTLY PROHIBITED TO DISASSEMBLE THE COMPONENTS OF AIR BAG MODULES.

All the system components have been designed specifically to work on a car of specific make and model, therefore Air Bags cannot be adapted, re-used or installed on other vehicles, but only on those for which they were designed and produced.

Any attempt to re-use, adapt or install an Air Bag on a different model may cause serious or lethal harm to the occupants of the vehicle in the event of an accident.

Changing the Air Bag (owing to a fault or expiry of the terms of guarantee)

When replacing an Air Bag module due to a fault or expiry of the terms of guarantee it is necessary to:

1. Remove the sticker label from the new module, stick it in the special file with the vehicle data (chassis no., date of registration, model, etc.) and add the serial number of the old module. The file with the recorded data must be kept for any inspections over time.
2. Before glueing the label it should be perforated in correspondence with the month and the ten years following the year in which the module is fitted (e.g. 1996 will correspond to 2006).
3. Connect the module to the special connector.
4. Fit the Air Bag module in its housing checking the correct arrangement of the connection cable and fasten the screws to the specified torque.

Control unit replacement

The electronic control unit must ALWAYS be replaced in the event of a crash involving activation of the complete system (Air Bag and pretensioners)

Never attempt to re-use the electronic control unit.

Also when replacing the control unit it is necessary to stick the label in the file mentioned previously.

After working on the system it must be checked using the ALFA ROMEO Tester.

OPERATIONS AFTER AN ACCIDENT

Should any component of the safety system be damaged after an accident, it MUST be replaced.

Do not attempt to repair the control unit, clock spring contact and Air Bag modules.

ACCIDENTS WITH OR WITHOUT AIR BAG ACTIVATION

Some system components should be inspected whether the system has been activated or NOT. These components are:

- Steering column;
- Steering column supports;
- Control unit and modules anchorage area;
- Clock spring contact;
- Dashboard (in the area of the passenger's Air Bag).

The presence of distortion, breaks and flexing necessarily involves replacement of the component.

ACCIDENTS WITH ACTIVATION OF AIR BAGS

Some system components must be replaced if the car has suffered a head-on crash involving total or partial system activation

In the event of partial activation (only pretensioners), these components are:

- Pretensioners
- Electronic control unit (only after the third activation of the pretensioners)

In the event of total activation (Air Bag and pretensioners), these components are:

- Air Bag modules
- Pretensioners
- Electronic control unit.

As far as the wiring and connectors are concerned, these should be checked for any signs of burns, melting of the outer insulation or damage due to excessive heat.

Any signs of damage on the clock spring contact and electronic control unit and Air Bag module anchorage areas necessarily involve replacement of the damaged components.

Painting work

There are no particular safety instructions to be followed for painting work followed by oven drying since the modules have been designed in such a way that heating the outside surfaces of the car using normal paint drying systems will not damage them.

The use of naked flames near modules is prohibited.
All the electronic control units (including the one for the Air Bag system) should in any case be removed if their temperature in certain environments may reach or exceed 85°C.

HEALTH HAZARDS

The precautions to be taken when handling activated Air Bags are the following:

- wear protective polyethylene gloves and safety glasses;
- after touching triggered Air Bags, wash your hands and any exposed parts of the body with soap and water.

Effects of over exposure

There is no potential harm in exposure to the propellent as the system is completely sealed.

The mixture of propellents is in the solid state, therefore inhalation is impossible also in the case of breakage of the gas generator cartridge.

Should any gas leak, there is no danger for human health.

At all events avoid contact with the skin and do not swallow the propellent.

- <u>Contact with the skin</u>: wash immediately with soap and water.
- <u>Contact with the eyes</u>: Wash the eyes immediately under running water for at least 15 minutes.

- Inhalation: take the person involved outdoors immediately.
- Swallowing: induce vomit if the person is conscious.

Under all these circumstances always call a doctor.

SAFETY RULES FOR HANDLING AIR BAG MODULES

Under normal conditions the driver's and passenger's Air Bag are activated by the action of an electronic ignition device during the crash. The gas developed under these conditions is harmless.

Personnel carrying out operations on the device fitted on the car must strictly adhere to the following rules of safety.

Personnel working on the devices must be appropriately trained.

- During open (exploded) Air Bag removing and replacement operations handle only one module at a time and when removing wear gloves and glasses.
- Always rest the Air Bag module with the opening lid and the pre-breakage groove upwards. Never place anything above this lid.
- At the end of operations always wash the hands carefully with neutral soap and in the event of contact of residual powder with the eyes rinse immediatly with plenty of running water.
- In all versions with Air Bag it is prohibited to work from the front seats without firstly rendering the system inoperational by disconnecting the two battery cables and waiting for 10 minutes.
- The metal components of an Air Bag that has just exploded are very hot. Avoid touching these components for 20 minutes from the time in which the Air Bag was activated.
- Do not power the Air Bag module with electricity unless as specified for installation and servicing.
- Do not carry out repairs on Air Bag modules. Send all faulty modules to the manufacturer. - Do not subject the Air Bag module to heat for example by welding, hammering, drilling, mechanical machining, etc.
- Never install on cars Air Bag units that have fallen or reveal signs of any type of damage whatsoever.
- It is prohibited to keep Air Bag modules together with inflammable materials or fuel.
- The gas generators must not come into contact with acids, greases and heavy metals: contact with these substances may cause the formation of poisonous, harmful gas or explosive compounds.

Any storage of spare parts must be carried out in the original packing and temporary storage should follow the same procedure as an Air Bag removed from the car and not activated, i.e. in any case a key-locked metal cabinet specially for this purpose must be used (shockproof metal cabinet with vents to allow natural ventilation inside).
The cabinet must have warning notices (DANGER EXPLOSIVES - DO NOT USE NAKED FLAMES - ONLY TO BE OPENED BY AUTHORISED PERSONNEL).

SCRAPPING AIR BAG MODULES

Air Bag modules fitted on the car must not be scrapped with the vehicle, they must be removed.

Air Bag units must be deployed before scrapping.

If an Air Bag module has not been deployed during a crash the device is to be considered still charged. All unexploded material MUST NOT BE DEPLOYED, it should be sent to a specialised centre - for ITALY to GECMA, Chivasso - stating "AIR BAG CONTAINING PYROTECHNICAL CHARGE TO BE DEPLOYED" on the delivery note.

For FOREIGN MARKETS, observe current local laws.

The devices must be shipped in the wrapping/packing with which the spare parts were received and if this is no longer available it is possible to ask the Spares Division for the packing only.

Of course, when replacing Air Bag devices, the original packing should be kept intact to be able to return the undeployed device.

WARNING: The failure to follow the procedures listed here may cause undue triggering of Air Bag units and personal injury. Undeployed Air Bag units must NOT be disposed of through the usual refuse disposal channels. Undeployed Air Bag units contain harmful substances for the health which may cause personal injury if the sealed container containing them is damaged during disposal. Disposal of Air Bag units without following this procedure may infringe current laws on the subject.

Ordering procedure

In the case of need, the devices are to be requested individually from Direzione Post-vendita Ricambi-Volvera only through the "depannage" procedure as the Network must not keep these parts in stock. At all events, for in-house handling an in-out register should be kept recording the unit serial numbers and vehicle data (chassis no., date of registration, model, etc.)

CONTROL UNIT (BECKER) - up to chassis n°6016878

The electronic control unit (1) is located in the rear centre section of the car and is rigidly fastened to the floor.

It is fitted with a 10-pin connector (2) used for connection to the electric system.
It is supplied with 12V when the ignition key is in the MARCIA position. However, it still functions for appr. 100 msec after the power is cut off, thereby ensuring operation in an accident which cuts the power off; this is possible due to a buffer condenser within its circuits, which accumulates electrical energy.

This way operation of the Air Bag is guaranteed if the accident causes a fall in the system voltage (eg. battery damage or breakage, supply cables cut off. etc.).

The control unit must be directed with the arrow (3), printed on the sticker pointed in the direction of travel of the vehicle.

This position must always be closely adhered to, since it determines the direction in which the acceleration sensor receives the negative acceleration values to determine a collision situation and trigger the system:

The ECU is equipped with an accelerometer sensor. The sensor signal is processed by a microprocessor and detects the severity of an impact. The ECU, consequently, triggers the pretensioners and the airbags. A second safety sensor enables airbag triggering.

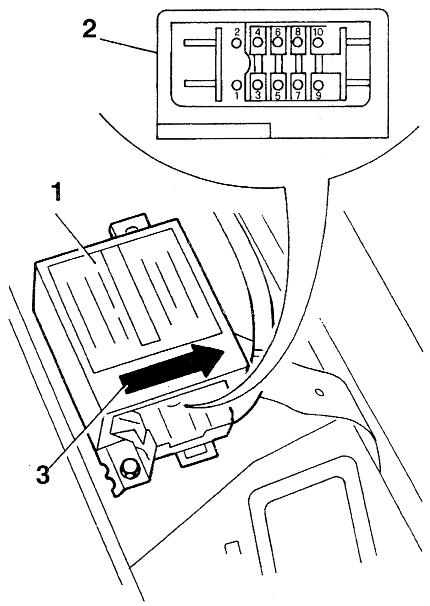

CONTROL UNIT PIN-OUTS

1. Pretensioner activation circuit (+)
2. Modules activation circuit (+)
3. Warning light signal (and diagnosis connector)
4. Diagnosis connector signal
5. Activation (-) of passenger's module
6. Activation (-) of steering wheel module
7. Activation (-) of RH pretensioner
8. Earth
9. Key-operated supply
10. Activation (-) of LH pretensioner

CONTROL UNIT (TRW) - from chassis n°6016879 -

The electronic control unit (1) is located in the centre rear of the car, and it is fastened rigidly to the floor.

It has a 10 pin connector (2) used for connection to the electric system.
It is supplied at 12 V with the ignition key at MARCIA. Activation of the Air Bags is still ensured for appr. 100 msec after a power failure due to a crash; this has been made possible due to a buffer condenser contained in the circuits which accumulates electricity.

This guarantees operation of the Air Bag also in the event of a crash causing a lowering of the voltage in the system (eg. battery damage or breakage, supply cables cut off, etc.).

The control unit must be directed with the arrow (3), stamped on the sticker, in the direction of TRAVEL of the vehicle.

This is absolutely necessary, because it determines the direction in which the acceleration sensor reads the negative acceleration value to define the crash condition and thus operate the system.

The ECU is equipped with an accelerometer sensor. The sensor signal is processed by a microprocessor and detects the severity of an impact. The ECU, consequently, triggers the pretensioners and the airbags. A second safety sensor enables airbag triggering.

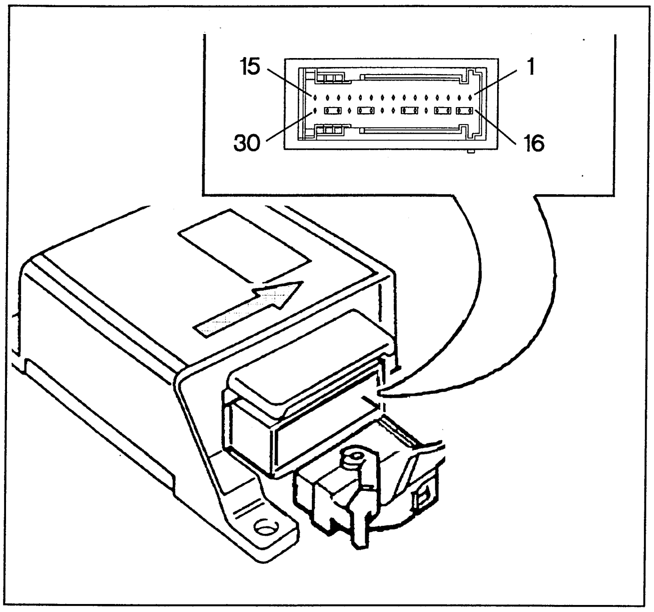

CONTROL UNIT PIN-OUT
1. Driver's Air Bag (-)
2. Driver's Air Bag (+)
3. Passenger's Air Bag (-)
4. Passenger's Air Bag (+)
5. N.C.
6. Passenger's pretensioner (+)
7. Passenger's pretensioner (-)
8. Line L for Tester
9. Line K for Tester
10. Driver's pretensioner (+)
11. Driver's pretensioner (-)
12. N.C.
13. Warning light (fault and diagnosis)
14. Control unit earth
15. Control unit supply (+15)
16. Bridge for driver's Air Bag (-)
17. Bridge for driver's Air Bag (+)
18. Bridge for passenger's Air Bag (-)
19. Bridge for passenger's Air Bag (+)
20. N.C.
21. Bridge for passenger's pretensioner (+)
22. Bridge for passenger's pretensioner (-)
23. N.C.
24. N.C.
25. Bridge for driver's pretensioner (+)
26. Bridge for driver's pretensioner (-)
27. N.C.
28. Bridge for warning light
29. Bridge for control unit earth
30. N.C.

Failure memory

While the vehicle is running, the ECU carries out a continuous system test, checking the continuity in the circuits and the components. All identified faults are memorised and the "Airbag failure" warning light simultaneously lights up on the instrument panel. The failure memory can be consulted during Servicing by connecting a diagnostic tool to the built-in diagnostic socket (refer to following specifications).

Impact memory

As stated, the ECU microprocessor applies complex control and calculation algorithms to the accelerometer sensor signal and identifies the level of severity of an impact. According to the level of severity and when enabled by the safety sensor, the ECU sends a trigger signal to the pretensioners and to the airbags. The trigger sequence is memorised in a specific impact memory containing the information regarding trigger thresholds and safety sensor enables.

Air Bag fault warning light

The Air Bag warning light located in the instrument cluster of the car is powered when the ignition switch is turned to the MARCIA position and it earthed via the electronic control unit.

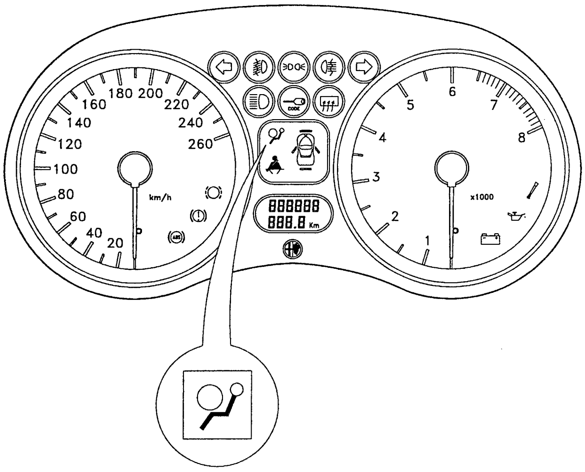

It lights up for about 4 seconds when the vehicle is started (initial test phase).

If the light does NOT light or does NOT go out after 4 seconds, then there is a fault in the Air Bag system.

If the electronic control unit detects a fault during self-diagnosis tests it will immediately light up the Air Bag warning light.

Once a fault has been signalled, the warning light will remain on until the fault has been repaired and cancelled in the fault memory.

PAGE 9

TO PAGE 12

ANNULLED

WIRING DIAGRAM (BECKER control unit - up to chassis no.6016878)

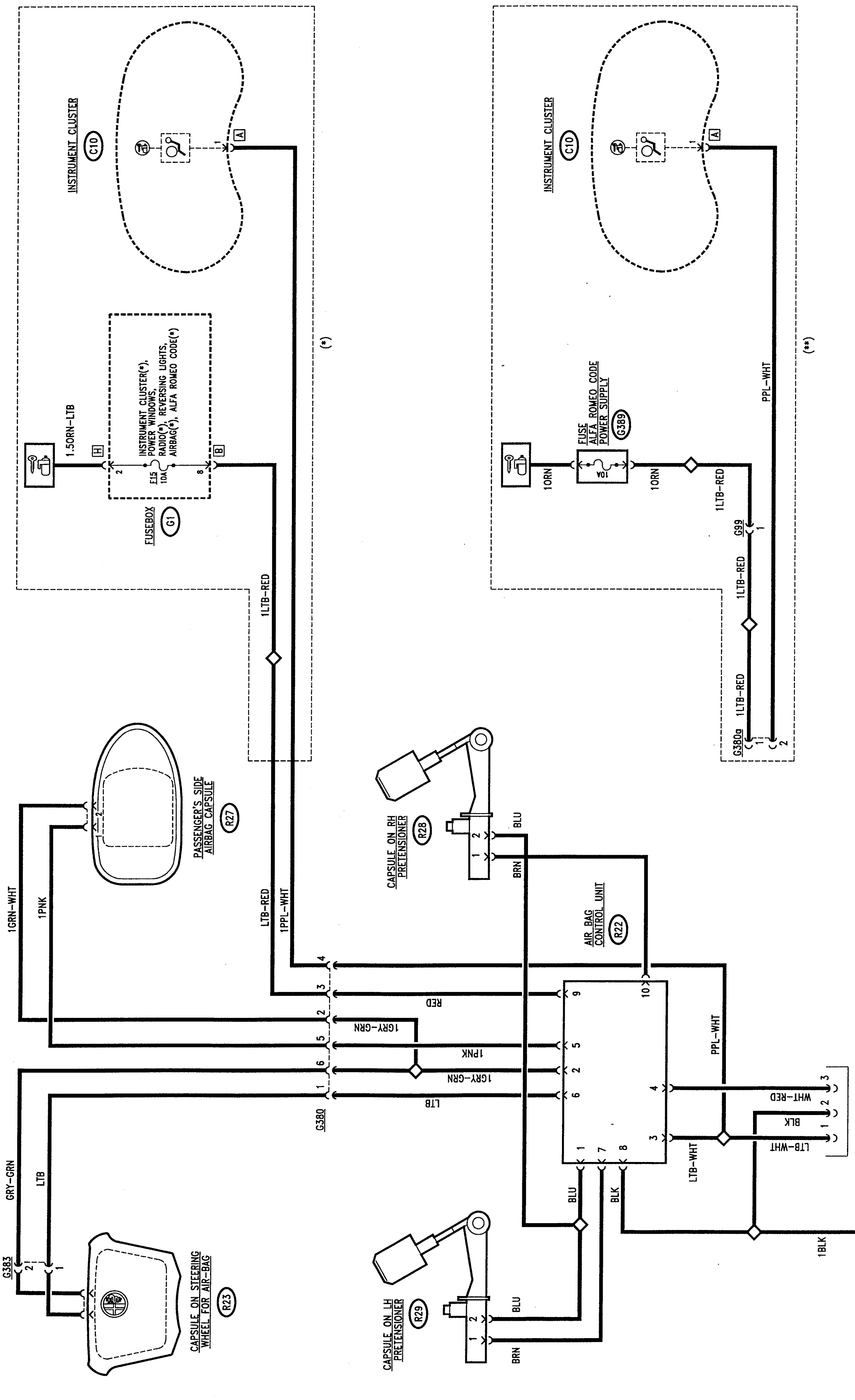

(*) up to chassis no._____

(**) from chassis no._____

WIRING DIAGRAM (TRW control unit - from chassis no.6016879)

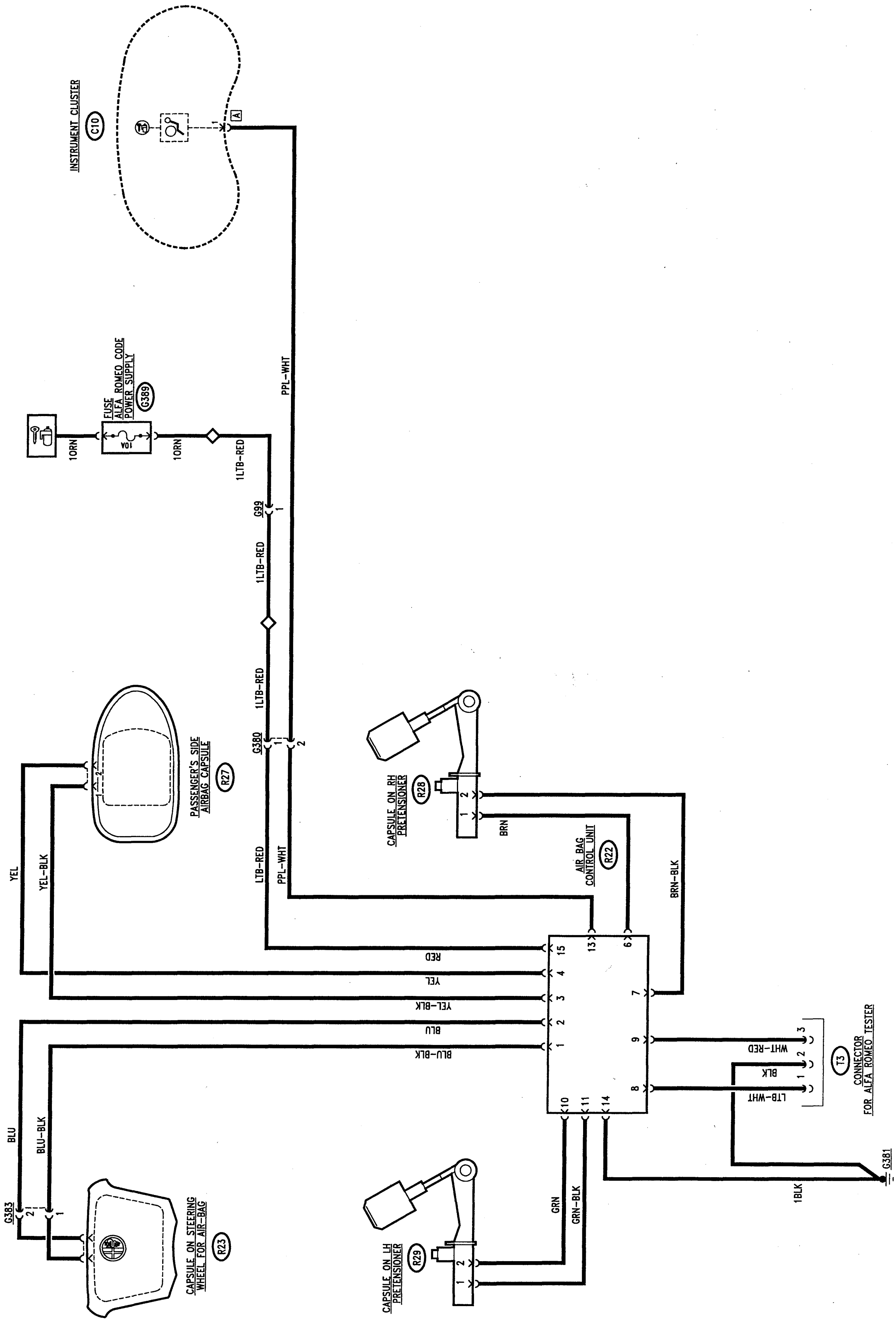

FUNCTIONAL DESCRIPTION (BECKER control unit - up to chassis no.6016878)

The control unit **R22** is supplied at pin 9 by the "key-operated" supply, - up to chassis no.___ - with a circuit protected by fuse **F15** located in fusebox **G1** and from chassis no.___ via wander fuse **G389** (10A).

The system comprises two cushions, one in front of the driver **R23** (at the centre of the steering wheel) and one in the dashboard in front of the passenger **R27** and the two pretensioner modules **R28** and **R29** respectively located on the passenger seat and the driver seat.
While the car travels, the control unit **R22** continuously diagnoses the system, thereby checking the continuity of the circuits and of the components.

In the event of a crash detected by the two internal sensors (one piezoelectric and one mechanical) the control unit commands the triggering of the two modules sending a voltage via two signals: one earth (from pin 5 for the passenger's module and from pin 6 for the module on the steering wheel) and a 12 V supply (pin 2).

When a fault or system malfunction is detected, the type of fault is logged and the warning light on the instrument panel **C10** is turned on to alert the driver of the presence of a fault in the system.

Lastly, connector **T3** allows connection with the ALFA TESTER.

FUNCTIONAL DESCRIPTION (TRW control unit - from chassis no.6016879)

The control unit **R22** receives the "key-operated" supply at pin 15, with the circuit protected by wander fuse **G389** (10A), while pin 14 is connected to earth on the specific point **G381** connected near the control unit.

The system comprises two cushions, one for the driver **R23** (at the centre of the steering wheel) and one in the dashboard in front of the passenger **R27** and the two pretensioner modules **R28** and **R29** located on the passenger's and driver's seats respectively.

While the car is travelling, the control unit **R22** continuously diagnoses the system checking the continuity of the circuts and components.

If a crash is detected by the two internal sensors (one piezoelectrical and one mechanical), the control unit commands activation of the two modules sending a current via two signals from pin 3 and 4 for the passenger's module and from pin 1 and 2 for the module on the steering wheel.

In the same way, for the pretensioners, two signals are sent from pin 6 and 7 for the passenger's side and from pin 10 and 11 for the driver's side.

When a system fault or malfunction is detected, the type of fault is memorised and the Air Bag warning light on the instrument cluster **C10** is turned on to alert the driver of the presence of a system fault.

Lastly, connector **T3** allows connection to the ALFA TESTER via pin 8 (line L) and 9 (line K).

LOCATION OF COMPONENTS
(BECKER control unit - up to chassis no.6016878)

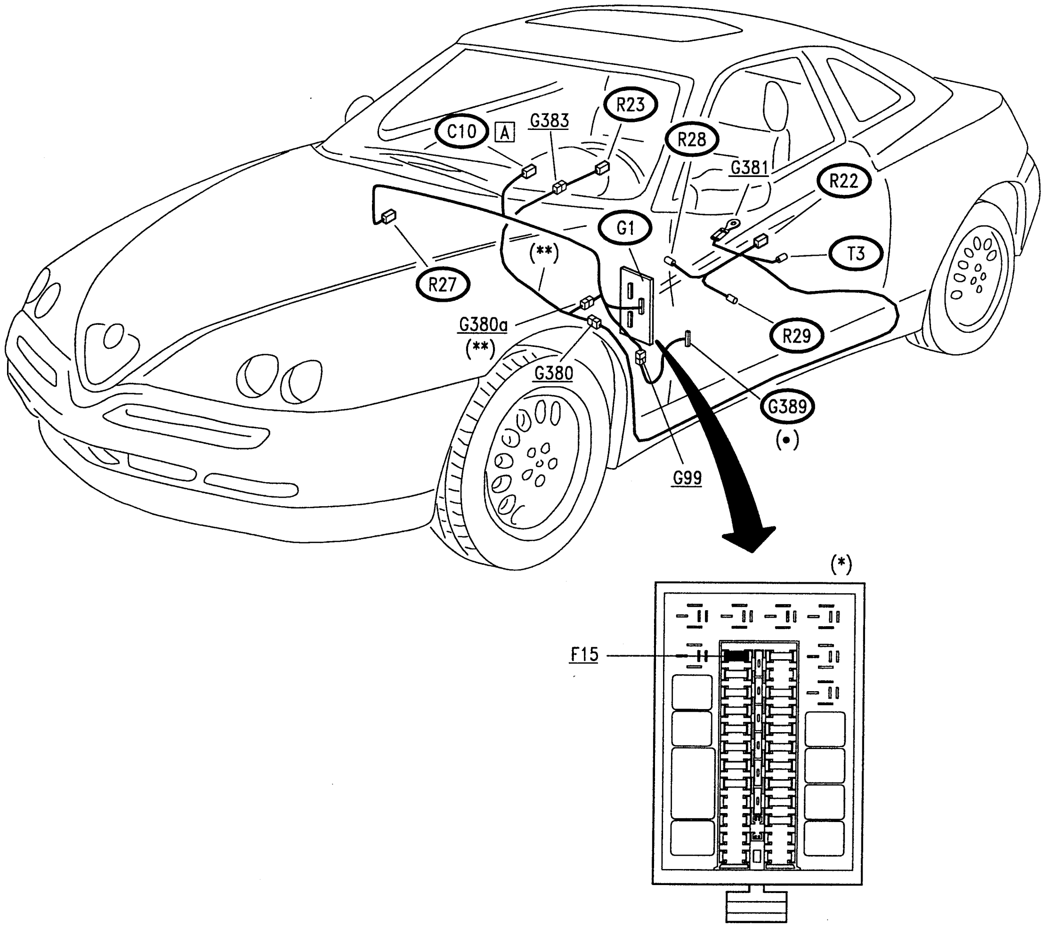

(*) Up to chassis no.___
(**) From chassis no.____

(•) Red fuse holder

LOCATION OF COMPONENTS
(TRW control unit - from chassis no.6016879)

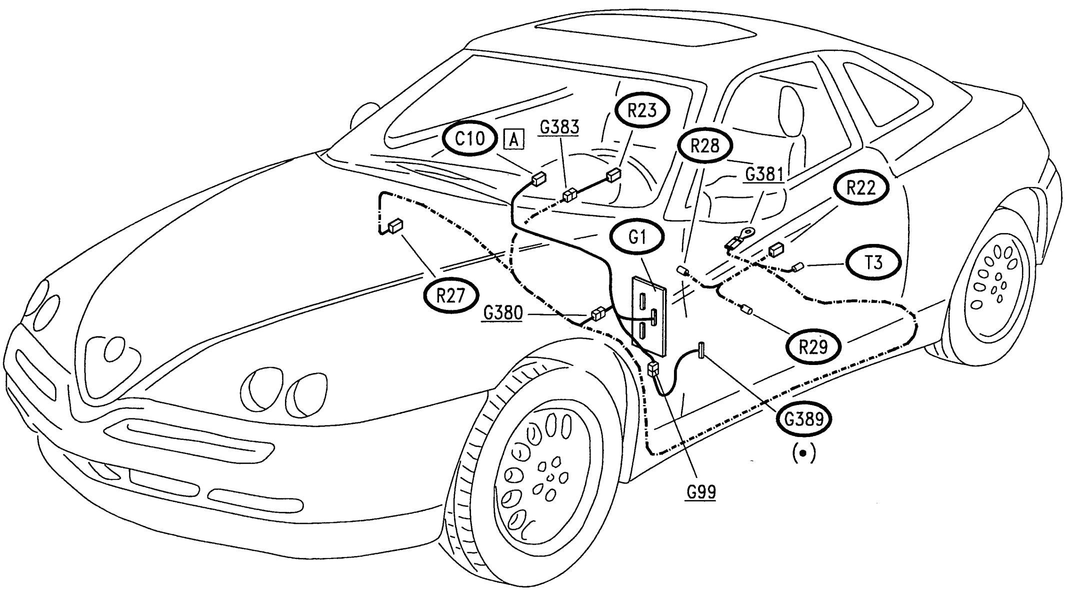

----	Specific cable for Air Bag, with yellow sheath
(•)	Red fuseholder

SYSTEM DIAGNOSIS

During the whole time the vehicle is travelling the electronic control unit performs a diagnosis cycle every 100 msec. checking the Air Bag system and memorising any faults in the FAULT-MEMORY whether they are momentaneous or continuous. The moment the fault is detected, besides memorising it, the control unit turns on the Air Bag warning light to inform the driver that the fault may prevent the use of this system. The User must then take the vehicle **at the soonest** to the nearest Service Centre to have the system checked with the ALFA TESTER.

Diagnosis using the ALFA TESTER

N.B. Before carrying out diagnosis using the flashing code, carry out the preliminary test described later (TEST A).

To prevent the accidental deployment of Air Bags or pre- tensioners during diagnosis, it is necessary to disconnect their wiring and connect the dummy resistances supplied with the ALFA TESTER Cartridge to the connectors.

NOTE:
When the ignition key is disengaged the time and type of fault or error code are kept in the FAULT MEMORY. Once the fault has been repaired the memory will be cancelled by the TESTER. Intermittent faults are stored in the FAULT MEMORY for 48 hours, counted from the moment in which they occur (time calculated only with the ignition key in the MARCIA position).

Diagnosing the system using the flashing codes (with control unit BECKER only)

As an alternative to the ALFA TESTER it is possible to diagnose the system by reading the number of flashes of the Air Bag warning light .

N.B. Before carrying out diagnosis using the flashing code, carry out the preliminary test described later (TEST A).

To perform diagnosis, with the ignition key engaged, earth pin 3 of the electronic control unit for between 1 and 5 seconds (pin 3 of the control unit connects the Air Bag failure warning light and pin 1 of connector **T3**).

The following table shows the possible faults and the remedies to be adopted, according to the number of flashes of the warning light.

Once the fault has been repaired, the test must be repeated to check that other faults are not present. Remember that the control unit signals one fault at a time, in decreasing order, until the system has been repaired completely. When the repairs have been completed, the FAULT MEMORY is cancelled by earthing pin 3 of the control unit for between 5 and 10 seconds. All the errors stored must be cancelled one by one, repeating the procedure each time, until the FAULT-MEMORY has been cancelled completely.

NOTE:
Diagnosis with the flashing code is not foreseen with the TRW control unit.

NO. OF FLASHES	POSSIBLE FAULT	REMEDIES
1	No faults detected	-
2	Faulty control unit (or piezolectric sensor inside)	Change control unit **R22**
3	Air Bag module triggering circuit in contact with +12V	Check the wiring
4	Air Bag module triggering circuit in contact with earth	Check the wiring
5	Driver's side module triggering device resistance out of tolerance	Check the wiring or change the driver's side module **R23**
6	Passenger's side module triggering device resistance out of tolerance	Check the wiring or change the passenger's module **R27**
7	Supply voltage below 9.5 V	Check fuse **F15** of fusebox **G1** or recharge or change the battery **A1**
8	Warning light circuit fault	Check the wiring or change the instrument cluster **C10**
9	Memorising of a CRASH that has occurred (*)	-
10	Pretensioner triggering circuit in contact with + 12 V	Check the wiring
11	Pretensioner triggering circuit in contact with earth	Check the wiring
12	Driver's side pretensioner wiring cut off	Check the wiring or change the pretensioner **R29**
13	Passenger's side pretensioner cut off	Check the wiring or change the pretensioner **R28**

(*) It is NOT possible to read the CRASH data stored in the control unit using the ALFA ROMEO TESTER

PRELIMINARY CHECKS ON THE AIR BAG SYSTEM — TEST A

Each time work is carried out on the system, it is necessary to disconnect one of the two modules from the wiring and replace it with a dummy resistance.

TEST PROCEDURE		RESULT	CORRECTIVE ACTION
A1	CHECK FUSE	OK ▶	Carry out **step A2**
	– Check the intactness of fuse **F15** of fusebox **G1** (up to chassis no.____) or wander fuse **G389** (from chassis no.____) is intact	~~OK~~ ▶	Change the fuse
A2	CHECK CONTINUITY	OK ▶	Carry out **step A3**
	– Check continuity of the cable between fusebox **G1** connector B (up to chassis no.____) or between wander fuse **G389** (from chassis no.____) and the Air Bag control unit **R22** (pin 9 BECKER - pin 15 TRW)	~~OK~~ ▶	Restore wiring continuity
A3	CHECK CONTINUITY	OK ▶	Carry out **step A4**
	– Check continuity of the cable between the control unit **R22** (pin 8 BECKER - pin 14 TRW) and earth **G381**	~~OK~~ ▶	Restore wiring continuity
A4	WARNING LIGHT	OK ▶	Carry out **step A5**
	– Check that the warning light is intact in the instrument cluster **C10**	~~OK~~ ▶	Change the instrument cluster **C10**
A5	CHECK CONTINUITY	OK ▶	Carry out **step A6**
	– Check the continuity of the cables between module **R27** and the control unit **R22**	~~OK~~ ▶	Restore wiring continuity
A6	CHECK CONTINUITY	OK ▶	Carry out **step A7**
	– Check the continuity of the cables between module **R23** and the control unit **R22**	~~OK~~ ▶	Restore wiring continuity
A7	CHECK CONTINUITY	OK ▶	CONNECT TO THE DIAGNOSIS SOCKET **T3** AND CONTINUE OPERATIONS WITH THE ALFA TESTER OR WITH THE FLASHING CODE (with control unit BECKER only)
	– Check continuity of the cables between the pretensioners **R28** and **R29** and the control unit **R22**	~~OK~~ ▶	Restore wiring continuity

SUNROOF (GTV only)

INDEX

WIRING DIAGRAM

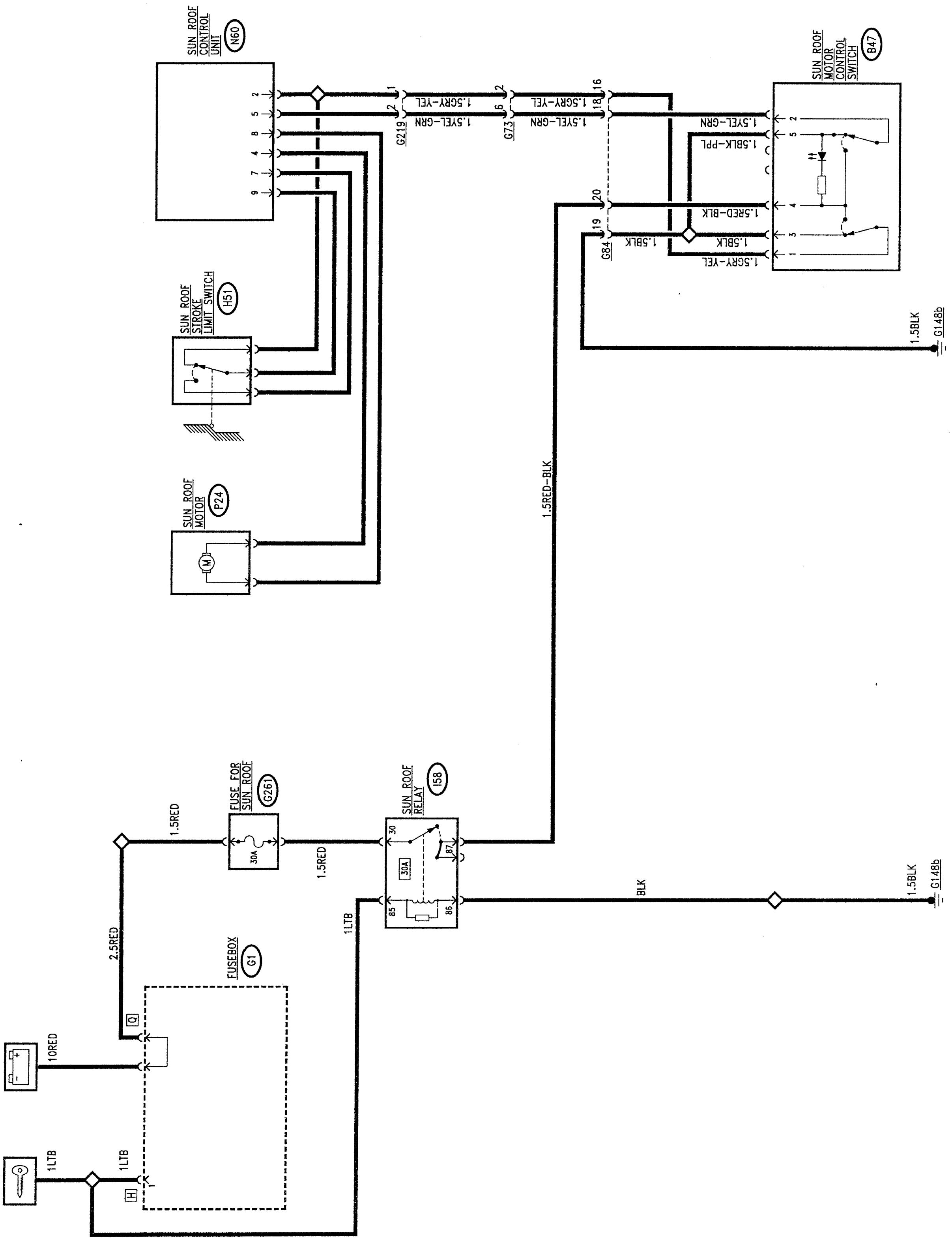

GENERAL DESCRIPTION

The sliding roof offers extra ventilation for the passenger compartment in warm weather and, when necessary, quick air changing, thereby increasing passenger comfort.
The mobile part of the roof comprises a glass pane and an interior sliding blind which is concealed in the roof panel trim.
A double switch, located next to the front ceiling light, operates a motor in two different ways: in the first, the motor raises the panel to the "quarter light" position, in the second, it opens the actual panel (for further details see GROUP 70 - "BODY-SUNROOF").
The whole system is controlled electronically by a control unit which regulates the various functions.
The sunroof can only be operated with the ignition key engaged.

FUNCTIONAL DESCRIPTION

The sunroof opening control system is powered by a special relay **I58**, located near the fusebox **G1**. The line is protected by wander fuse **G261**; system supply only takes place via the key-operated supply at pin 4 of the control switch **B47**, while pin 5 of the latter is connected to earth.

The system is a single functional unit comprising :

- control unit **N60**;
- motor **P24**;
- stroke limit contact **H51**.

The control switch **B47** is located on the tunnel console.

The control unit **N60** receives the operating signals from switch **B47** and controls the motor **P24** accordingly, taking account of any signal leading from the microswitch **H51**.

The system works according to the following logic:

- switch **B47** controls opening/closing of the sunroof: pin 4 of the same switch is supplied at 12 V: the pressing of the pushbutton in one direction controls sunroof opening, closing the contact on pin 2, thereby sending 12 V to pin 5 of the control unit; pressing in the opposite direction controls closing of the sunroof, closing the contact on pin 1, sending 12 V to pin 2 of the control unit;
- Pins 2 and 5 receive the control signals from switch **B47**; pins 9 and 7 are connected with the "zero" microswitch **H51** the contact of which is closed when the sunroof is in the "compass" position and open in all the other positions;
- pins 4 and 8 connect with the motor **P24** operating it in the two directions sending alternately 12 V and earth signals.

FAULTFINDING TABLE

Fault	Component to be checked					
	G261	I58	N60	P24 (1)	B47	H51 (1)
Sunroof fails to operate	•	•	•	•	•	
Sunroof fails to close properly			•			•

(1) N.B.: P24 and H51 are together in a single sunroof control unit N60 which must be changed completely in the event of a failure to a component.

LOCATION OF COMPONENTS

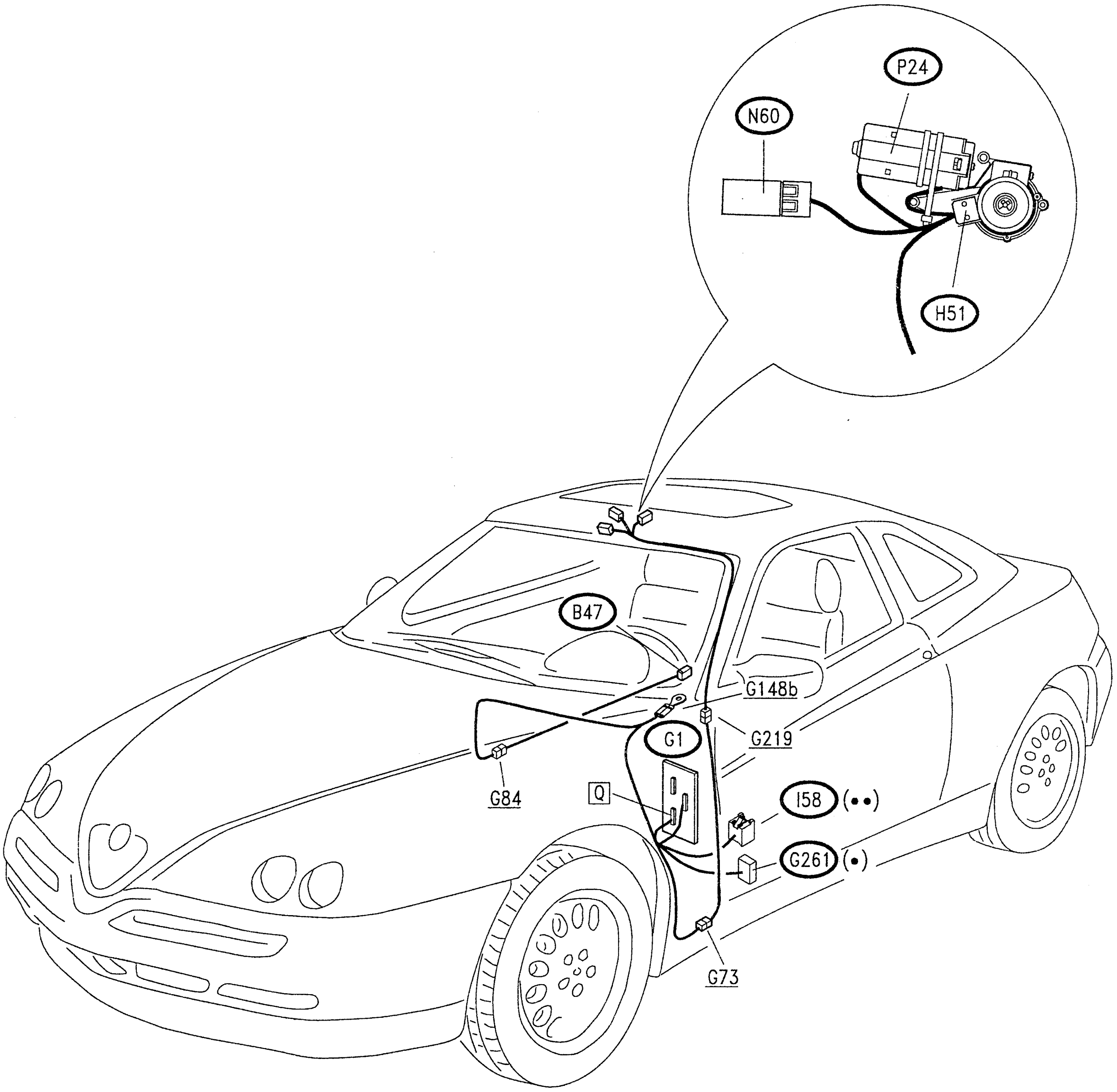

(•) Green fuseholder
(••) Red base

HEATING AND VENTILATION SYSTEM: HEATER

INDEX

WIRING DIAGRAM

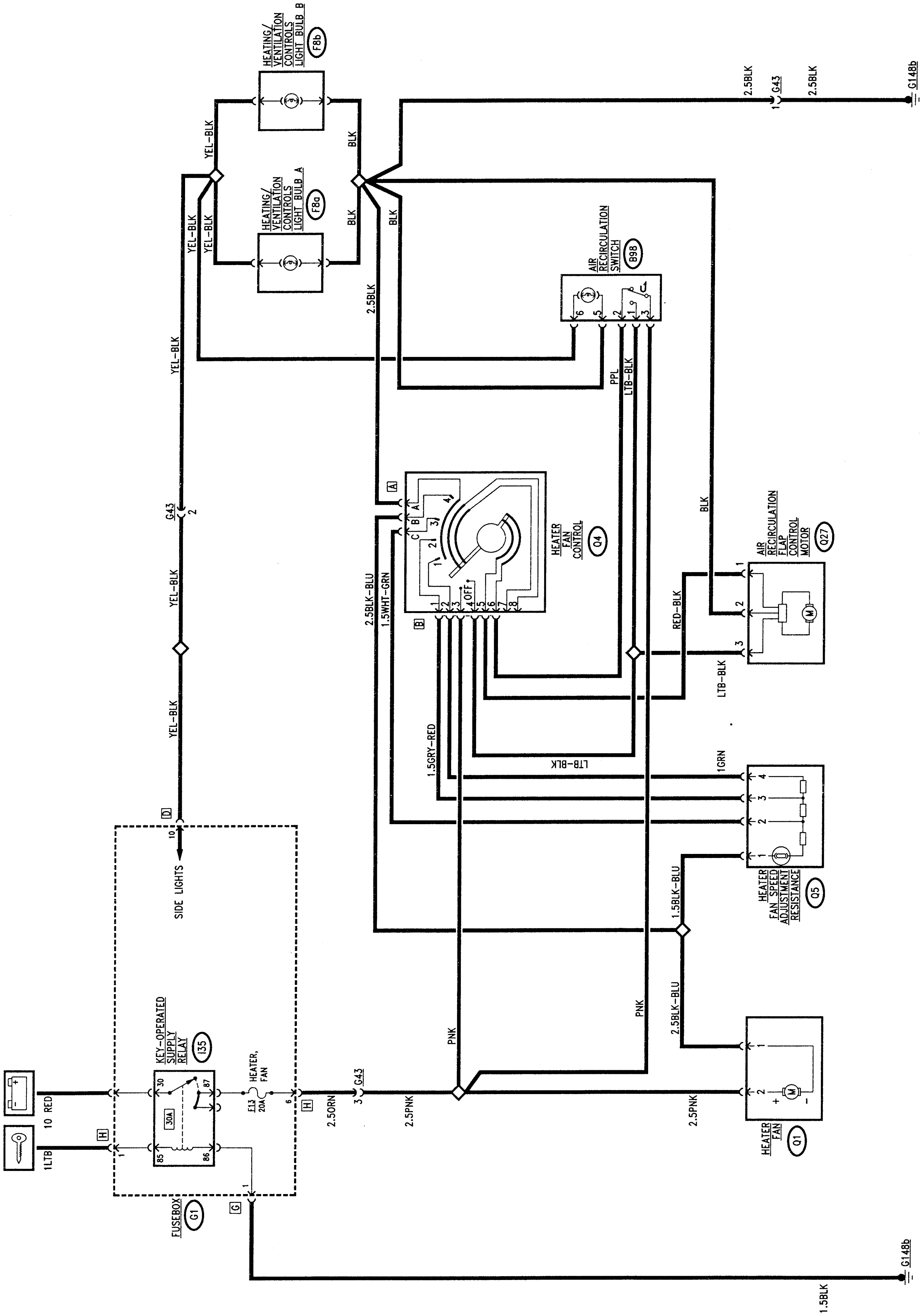

GENERAL DESCRIPTION

Climate control through the heater is controlled by three knobs of the control unit located on the panel: these controls act on the heater- distributor -air flow unit as follows:

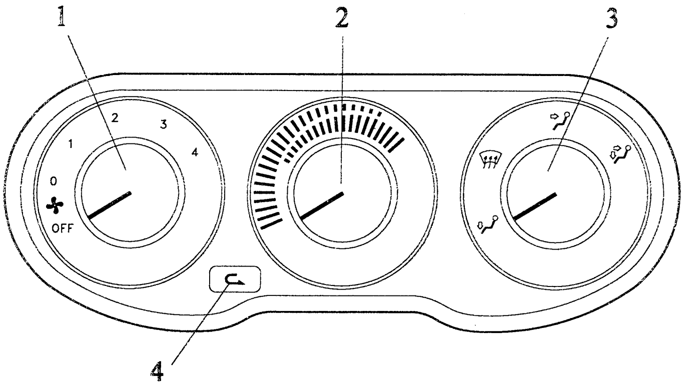

- the left-hand knob (1) mechanically operates the ports which adjust the flow of air: @PUNTO = OFF: air inlet shut off
  - 0: inlet of outside air without fan (dynamic air)
  - from 1 to 4: a switch is operated which turns on the fan through a four-speed regulator. The regulator and corresponding resistor are fitted on the air flow unit near the fan.

NOTE:the heater can only be turned on with the ignition key engaged.

- the centre knob (2) - mechanically operates the mixing port between warm air (red) and cold air (blue): when turned completely to the left, it shuts off the radiator closing a special tap.
  NOTE: the radiator comprises a heat exchanger which exploits the engine coolant fluid to warm the air sent to the passenger compartment: in fact it is supplied by a special pipe of the engine cooling circuit.
- the right-hand knob (3) adjusts the distribution of the flow acting, still by a mechanical transmission, on the distribution ports, sending air into the passenger compartment in the directions shown schematically on the ideograms.
- the recirculation function takes place pressing push-button (4) which acts on a motor that moves a flap: this closes the outside air duct, simultaneously opening that of the air recirulating from inside the passenger compartment.

The recirculation function makes it possible to withdraw the air to be treated from inside the passenger compartment, shutting off the flow of outside air which under certain circumstances might be unwanted: bad smells, smoke, unventilated tunnels, etc.

NOTE: remember that the only functions controlled electrically are:

- fan control and speed adjustment;
- operating the "recirculation" function while the others are controlled mechanically.

FUNCTIONAL DESCRIPTION

Fan:

The heating and ventilation fan **Q1** is supplied with battery voltage via the key-operated services relay **I35** - located in fusebox **G1** -; in addition to the relay, the supply line also crosses fuse **F13** of fusebox **G1**.
The fan motor **Q1** is operated with an earth signal from the control knob **Q4**. This signal crosses the speed regulator **Q5**, comprising three resistances in series, the crossing of which determines the four different speeds, depending on the signal from the knob **Q4**: from pin 2 of connector B (1st speed), from pin 1 of connector B (2nd speed), from pin C of connector A (3rd speed) and lastly from pin B of connector A (4th speed) with a direct signal that does not cross the regulator **Q5**.
The regulator **Q5** has a built-in thermal safety fuse which deactivates the circuit if the temperature exceeds 98°C.

Recirculation:

The recirculation function is carried out by operating motor **Q27** according to the following supply logic:

- pin 2 of **Q27** always at earth;
- 12 V at pin 3 of **Q27**: the motor turns engaging the recirculation function;
- 12 V at pin 1 of **Q27**: the motor turns shutting off recirculation;

The function is turned on through switch **B98**, but with switch **Q4** at "0", "1", etc...:

- switch **B98** not pressed: recirculation not engaged;
- switch **B98** pressed: recirculation engaged.

N.B.: With switch **Q4** at "OFF" recirculation is still activated, regardless of the position of switch **B98**

Controls lighting:

Lights **F8a** and **F8b**, inside the control panel together with the leds next to switch **B98** are supplied by the sidelights circuit - connector D of fusebox **G1**.

LOCATION OF COMPONENTS

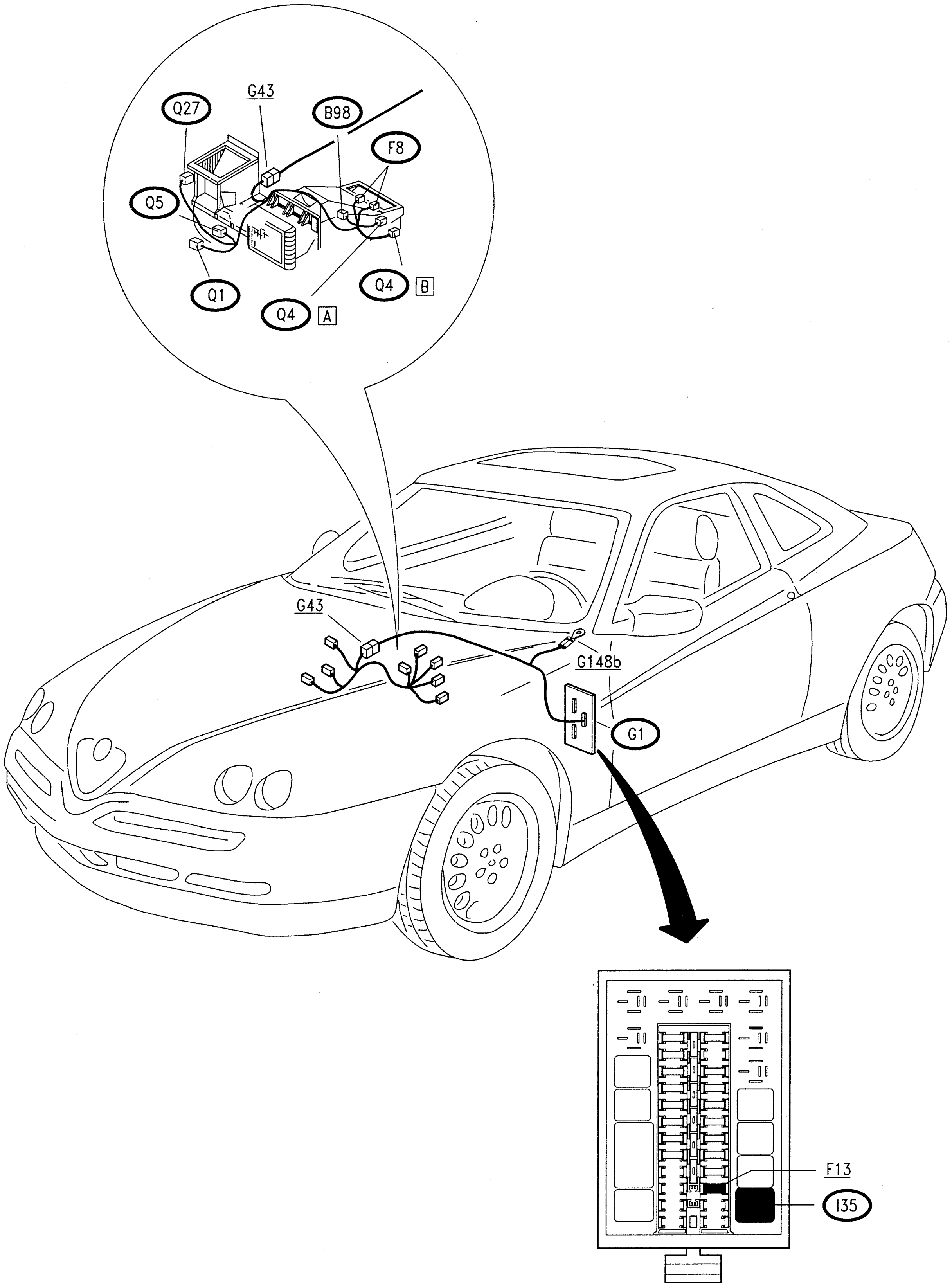

FAULT-FINDING TABLE

NOTE: air distribution to the passenger compartment and air heating/cooling are controlled mechanically. Therefore for failures such as the lack of heating/ventilation, incorrect air distribution, etc...., see Group 50 "HEATING AND VENTILATION"

Fault	Component to be checked							
	F13	Q1	Q5	Q4	Q27	B98	F8a (1)	F8b (1)
Fan engagement	•	•		•				
Fan engagement at different speeds			•	•				
Recirculation function				•	•	•		
Control panel lighting							•	•

(1) it is possible to change individual bulbs with their bulb holder.

CHECKING COMPONENTS

Heater fan Q1

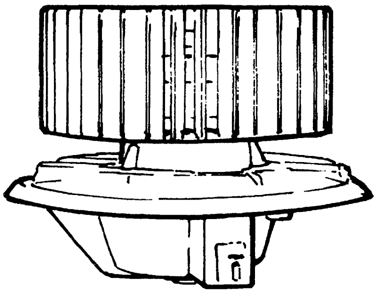

SPECIFICATIONS	
Nominal voltage	12V
Speed at 12V/25°C in free air with impeller and support	3400^{+200}_{-100} rpm
Power yielded at 12V/25°C at above-mentioned speed	90 W
Motor direction of rotation	leftwards impeller side

Heating/ventilation fan control Q4

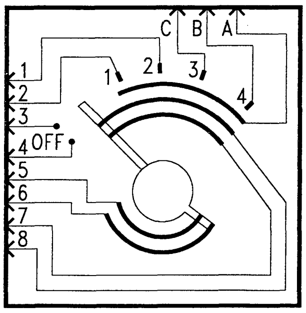

Check the contacts corresponding to the different positions of the knob.

Heating/ventilation fan speed adjustment resistance (Q5)

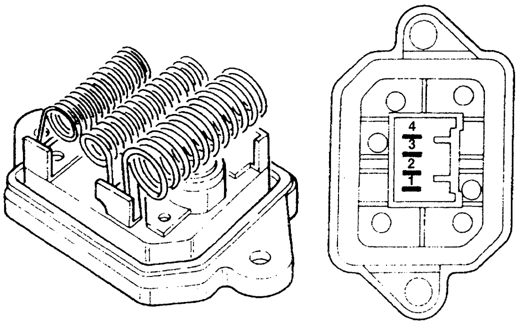

SPECIFICATIONS		
Piece crossed	Total resistance	Fan speed
4-1 3-1 2-1 none	3.55 Ω 1.35 Ω 0.35 Ω -	1st 2nd 3rd 4th
Thermal fuse cut in temperature		98°C

Recirculation flap control motor (Q27)

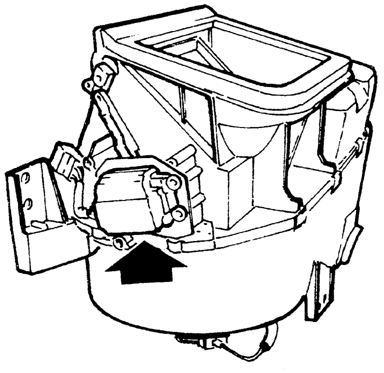

SPECIFICATIONS
12 V at pin 1 and 0 V at pin 2 = **counterclockwise** rotation of output shaft
12 V at pin 3 and 0 V at pin 2 = **clockwise** rotation of output shaft

HEATING AND VENTILATION:
AIR CONDITIONER ❄

INDEX

GENERAL DESCRIPTION

The system with manually operated air conditioner integrates the simple though functional heater producing cold and dehumidified air obtained by turning on the compressor and the cooling system.

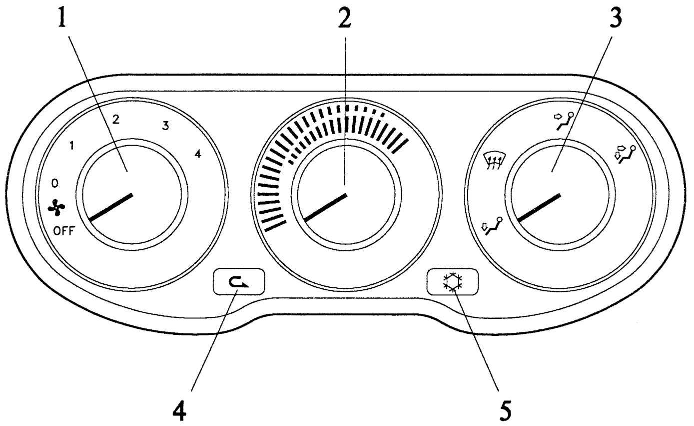

The control unit located on the dashboard comprises three knobs and two pushbuttons:

- through a flexible drive the left-hand knob (1) mechanically operates the opening of the ports which adjust the flow of air:
  - OFF: air inlet shut off
  - 0: inlet of outside air without fan (dynamic air)
  - from 1 to 4: a switch is operated electronically which turns on the electric fan through a four-speed regulator. The regulator and the corresponding resistor are fitted on the duct near the fan.
    NOTE: the fan may only be turned on with the ignition key engaged.
- the centre knob (2) mechanically operates the mixing port between hot air (red) and cold air (blue); when turned completely to the left it cuts off the radiator closing a special tap.
  NOTE: the radiator comprises a heat exchanger which exploits the engine coolant to release the heat to the air which is sent to the passenger compartment: in fact it is supplied by a special hose of the engine cooling circuit.
- the right-hand knob (3) adjusts the air flow distribution acting mechanically on the distribution ports directing air to the passenger compartment as schematically shown on the ideograms.
- the special pushbutton (4) turns on the "recirculation" function by operating a motor which closes the outside air duct port, simultaneously opening the one for recirculating air from inside the passenger compartment.
  (The recirculation function makes it possible to withdraw the air to be treated from inside the passenger compartment, thereby shutting off the flow of air from outside which under certain circumstances might be unwanted: bad smells, smoke, unventilated tunnels, etc...)
- pushbutton (5) turns on the cooling system which produces cold and dehumidified air.

Air cooling system:

This is a closed loop system in which a fluid condenses and evaporates removing the heat from the air in the evaporator. It mainly comprises:

the **compressor**, operated by the crankshaft through a belt: it is turned on and off through an electromagnetic joint operated by the conditioning system (as described below) and controlled by: the compressor is controlled by the engine electronic management system which adapts the idle speed if the compressor is operated, or prevents it from being turned on under circumstances in which the absorption of power would adversely affect the performance of the vehicle;

NOTE:
For the 3.0 V6 engine **a variable displacement compressor** is used and for the 2.0 T.S. engine one with **variable flow rates**: both these "variable load" configurations make it possible to meet the different needs of cold air without turning the electromagnetic joint on and off continuously: in fact, when the need is high, the compressor will move to the maximum load configuration and vice-versa for minimal requirements.

condenser, fitted in front of the engine coolant radiator: if the car is at a standstill, the air needed for heat exchange is supplied operating the engine radiator fan;

evaporator, exchanger which cools the air, located in the air duct-distributor;

accumulator/drier, which separates the fluid in the liquid state from the gas and also acts as a storage tank and filter for any foreign particles;

expansion valve, which suitably lowers the fluid pressure and temperature, quickening the passage from liquid to vapour;

three-level presure switch (trinary): which controls the safety and correct operation of the fluid circuit:

- it turns on the radiator fan when necessary (eg. if the car is at a standstill) thereby preventing an increase of pressure at the condenser (cut in at appr. 15 bar);
- it stops the compressor, de-energizing the electromagnetic joint, if the pressure reaches very high, thus dangerous, values (above appr. 28 bar), or very low values to ensure correct operating conditions (below appr. 2.45 bar);

minimum pressure switch (defroster) - 2.0 T.S. 16v engine only - : this disconnects the compressor when the pressure is too low (<1.8 bar) to prevent the danger of the evaporator "frosting". It also protects the compressor from sharp pressure falls, caused for example by leaks in the circuit.

N.B.: For the 2.0 T.S. 16v engine - from chassis no. 6023907 - a **4-level pressure switch is used**, which engages the fan at two different speeds

The 4 levels cut in at:

- level 1 = minimum pressure for compressor engagement.
- level 2 = pressure requiring engagement of the 1st speed of the fans.
- level 3 = pressure requiring engagement of the second speed of the fans (level not present in previous 3-level pressure switches).
- level 4 = maximum pressure for compressor engagement.

Engine fan control

When the car is travelling at low speed the cooling action of the dynamic air on the condenser is reduced and it is necessary to turn on the two fans which cool the engine radiator and the actual condenser. This is done by the trinary pressure switch which cuts in preventing an increase of the pressure at the condenser (over 15.2 bar) or 4-level (about 15 and 20 bar).

- **3.0 V6 and 2.0 T.S. with MOTRONIC M2.10.3**

The engine fans are firstly turned on at first speed, then through a timer they gradually pass to second speed avoiding sudden actuations and overloads at the relay contacts.

The delay device works according to the following logic:

- The first speed is turned on with a signal from the pressure switch on the cooling fluid circuit: after appr. 8-12 seconds, if this signal persists, the delaying device operates the second speed.
- When the signal from the pressure switch ceases, the second speed is turned off immediately and the delaying device operates the first speed for appr. 1 second more.

- **2.0 TS 16v with MOTRONIC M210.4**

The injection/ignition control unit directly manages engagement of the fans at the two different speeds.

Fuses and relays:

- **3.0 VS and 2.0 TS 16v only up to chassis no.6023906**

There is a box (**Q41**) in the engine compartment at the passenger's side which contains the relays and fuses associated with the air conditioning system:

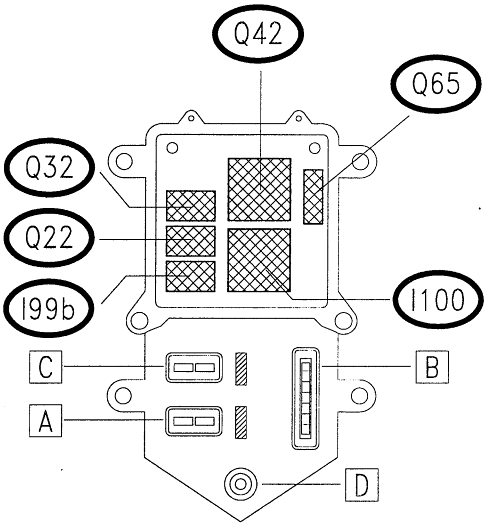

- cooling fan delaying device (**Q42**);
- compressor electromagnetic joint relay (**Q22**);
- additional compressor relay (**Q32**);
- 1st fan speed relay (**I99b**);
- 2nd fan speed relay (**I100**);
- floating 7.5A fuse (**Q65**);

There are also wander fuses for supplying the engine fan - 30A (**Q39**) and 50A (**G254**) - , and - for the 2.0 T.S. 16v engine - the 15A fuse (**Q40**) for supplying the set of fuses and relays (**Q41**); they are to be found next to the fuses and relays of the electronic ignition/injection system, and the floating fuse for supplying the heating and cooling fan **G255** (30A), to be found on the bracket next to the fusebox.

- **2.0 TS 16v from chassis no. 6023907**

The fuses and relays are grouped in the engine compartment, next to those of the ignition/injection unit:

- relay **Q22**;
- relay **Q32**;
- 50A fuse: **G254**

or under the dashboard on the bracket next to the fusebox:

- relay **I99**;
- relay **I100**;

30A fuse: **G255**.

For further details concerning this system, refer to Group 50 "HEATING AND VENTILATION".

FAN AND RECIRCULATION CONTROL

Fan:

The heater and ventilation fan **Q1** is through relay **Q15** and the line leading from fuse **G255**; the relay is energized with the "key-engaged" signal with the line that crosses the key- operated services relay **I35** and fuse **F13** of fusebox **G1**.

The motor of fan **Q1** is operated with an earth signal leading from the control knob **Q4**. This signal crosses the speed regulator **Q5**, which is formed of three resistances in series and which determine the four different speeds depending on the signal from knob **Q4**: from pin 2 of connector B (1st speed), from pin 1 of connector B (2nd speed), from pin C of connector A (3rd speed) and lastly from pin B of connector A (4th speed) with a direct signal that does not cross the regulator **Q5**.

NOTE : the regulator **Q5** has a built-in thermometric safety switch which de-activates the circuit if a temperature of 90±5°C is exceeded due to excess voltage (it closes again when the temperature falls by appr. 10°C).

First fan speed with the compressor operating:

With control **Q4** in the "0" position the fan **Q1** is stopped but it is is operated at first speed if the compressor is turned on: in this case a special relay **Q69** controls the fan supply at first speed. in fact, this switch is energized by the same signal (12V) that turns the compressor on (from switch **Q68** through pins 7 and 8 of connector B of knob **Q4**) and sends a signal to the regulator **Q5** in correspondence of the 1st speed.

Recirculation:

The recirculation function is achieved by actuating motor **Q27**, according to the following supply logic:

- pin 2 of **Q27** always earthed;
- 12 V at pin 3 of **Q27**: the motor turns operating recirculation;
- 12 V at pin 1 of **Q27**: the motor turns shutting off recirculation.

Turning on takes place through switch **Q68** but with switch **Q4** on "0", "1", etc...:

- switch **Q68** not pressed: recirculation not turned on;
- switch **Q68** pressed: recirculation turned on.

N.B.: With switch **Q4** at "OFF" recirculation is operational regardless of the position of switch **Q68**.

Controls lighting:

Lights **F8a** and **F8b**, located inside the control panel, together with the led next to switch **Q68** are supplied by the side lights circuit - connector D of fusebox **G1**.

Wiring diagram

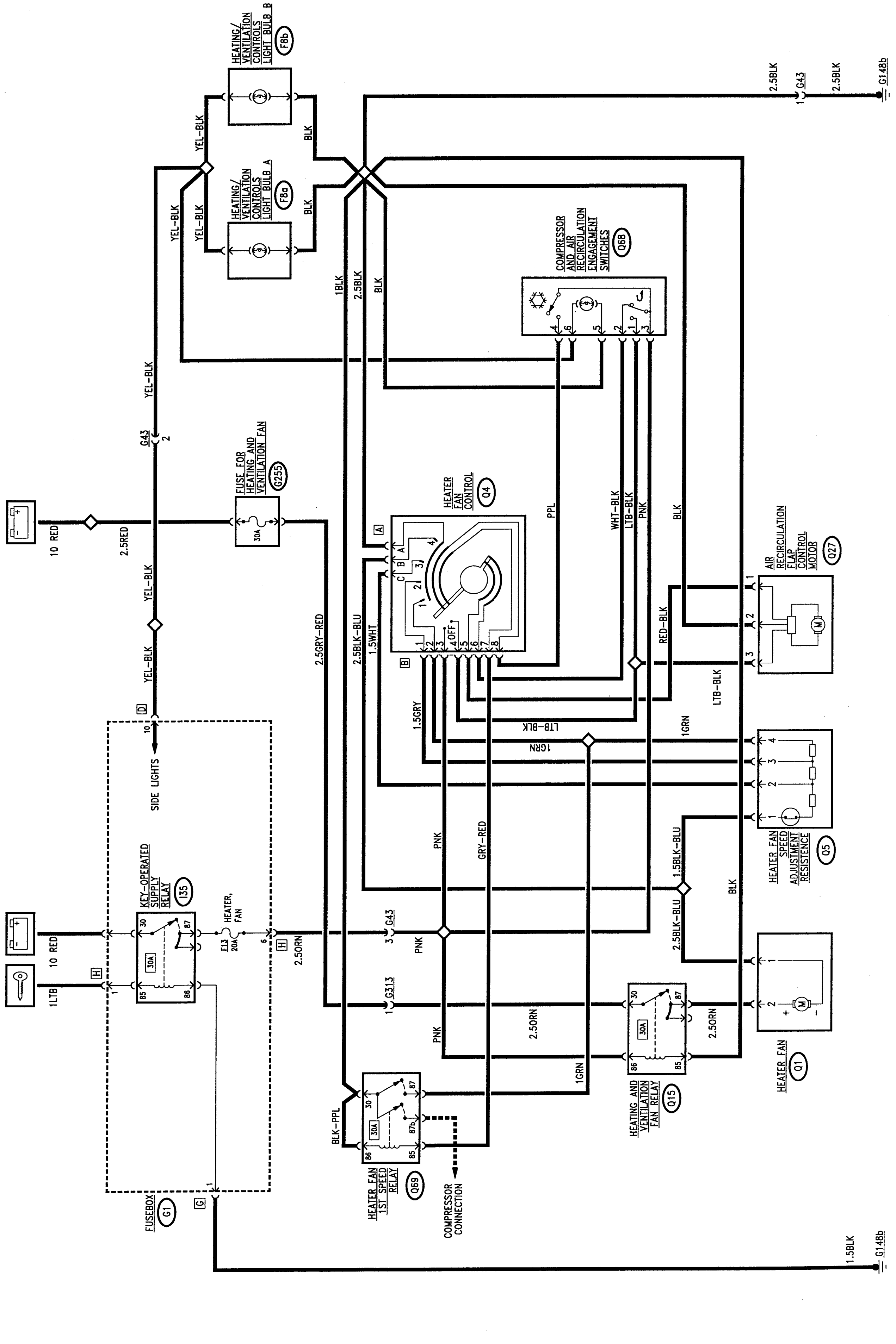

COMPRESSOR CONNECTION

(for 3.0 V6 and 2.0 TS 16v engine - up to chassis no.6023906)

The electromagnetic joint which operates the compressor **Q11** is controlled by relays **Q22 and Q32**, to be found in the set of relays and fuses **Q41**.

Relays **Q22** and **Q32**, have the coil supplied from the ignition switch (line protected by fuse **F17** of **G1**); their power line is supplied by battery voltage through fuse **Q65** (7.5A), also located in group **Q41** for the 2.0 T.S. 16v from chassis no.___ also through fuse **Q40** (15A).

Relay **Q22** is energized and consequently supplies 12V to the electromagnetic joint **Q11**, according to the following logic:

- Relay **Q32** is energized by an earth signal leading from relay **Q69**, which is in turn energized with a positive signal leading from the compressor operating switch **Q68**; this signal crosses the control knob **Q4** which interrupts it when the knob itself is in the "OFF" position: in fact, in this condition, the compressor cannot be turned on. It should be remembered that the same signal controls the first speed of the fan contemporaneously ("Fan and Recirculation Control").
- consequently, relay **Q32** sends two signals to the Motronic control unit **S11**: a direct signal as "request" to turn on the compressor pin 41 for the 2.0 T.S. 16v engine and pin 64 for the 3.0 V& engine - and a second signal which crosses the minimum pressure switch (antifrost) **Q9** (only for the 2.0 T.S. 16v engine) and the minimum and maximum pressure switch (trinary) **Q20** which intervene if the pressure in the cooling system is too high or too low: in this case the signal does not reach the control unit - pin 40 for the 2.0 T.S. 16v engine and pin 65 for the 3.0 V6 engine - and the control unit does not command the turning on of the compressor
- the control unit "refers" the command signal - pin 32 of **S11** - for the 2.0 T.S. 16v engine and pin 48 for the 3.0 V6 engine - to relay **Q22** which is energized and supplies joint **Q11** which turns on the compressor, but only when the internal logic has ascertained determinate conditions (for example the compressor does not turn on in the event of the engine requiring full power, etc...)

Wiring diagram
(for 3.0 V6 and 2.0 TS 16v engine - up to chassis no.6023906)

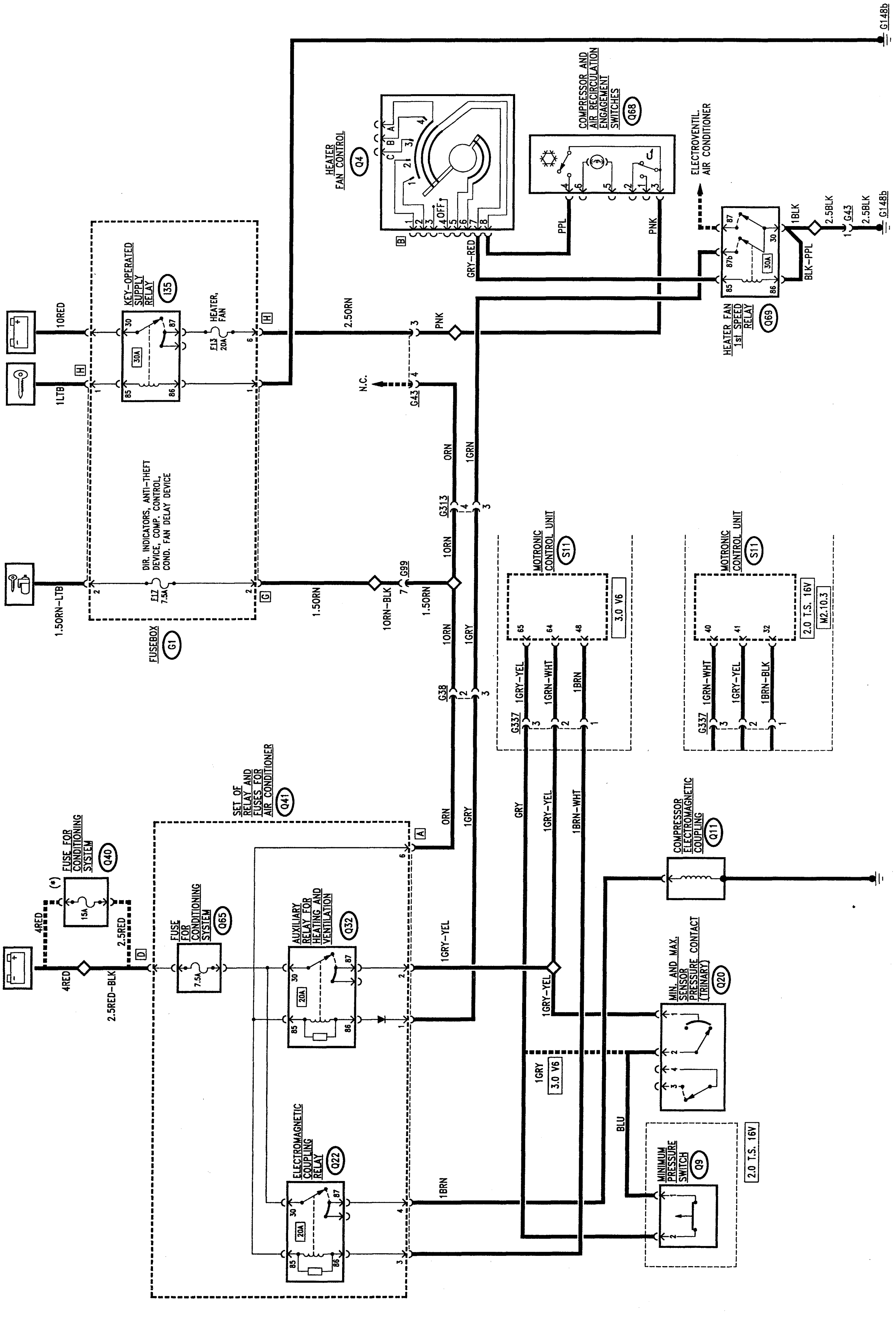

(*) for 2.0 T.S. 16v from chassis no.____

COMPRESSOR ENGAGEMENT

(for 2.0 T.S. 16v engine - from chassis no. 6023907)

The electromagnetic joint that operates the compressor **Q11** is controlled by relays **Q22** and **Q32** located next to he relays and fuses of the injection/ignition unit.

The coil of relays **Q22** and **Q32** receive the key-operated supply (line protected by fuse **F17** of **G1**); their power line is supplied by battery voltage.

Relay **Q22** is energised and therefore supplies 12V current to the electromagnetic joint **Q11**, according to the following logic managed by the M2.10.4 injection-ignition control unit, which is connected with the air conditioning system through:

- pin 40 which receives the signal requesting engagement of the system itself from the the conditioner circuit;
- pin 32 from which a "low" (earth) signal leads which commands relay **Q22** for engaging the air conditioner compressor **Q11**.

A special logic enables this engagement, as follows:

- it adapts idle speed to compensate the increased absorbed power resulting from engagement of the compressor;
- in the event of the need for high power at the engine (high throttle opening speed), full load or high engine temperature, it momentarily disengages the compressor.

Relay **Q32** is energised by an earth signal leading from relay **Q69** which is in turn energised by a positive signal leading from the compressor engagement switch **Q68**; this signal crosses the control knob **Q4** which interrupts it when the knob is at "OFF"; in fact, in this position, the compressor cannot be engaged. The same signal simultaneously controls compressor engagement at 1st speed ("Fan and Recirculation Control"); relay **Q32** sends a signal to the Motronic control unit **S11**: to "request compressor engagement" - pin 40 - which crosses the minimum pressure switch (antifrost) **Q9** and pressure switch **Q20** which cut in if the pressure of the cooling system is too high or too low: in the case the signal does not reach he control unit which does not engage the compressor.

Wiring diagram
(2.0 TS 16v engine - from chassis no.6023907)

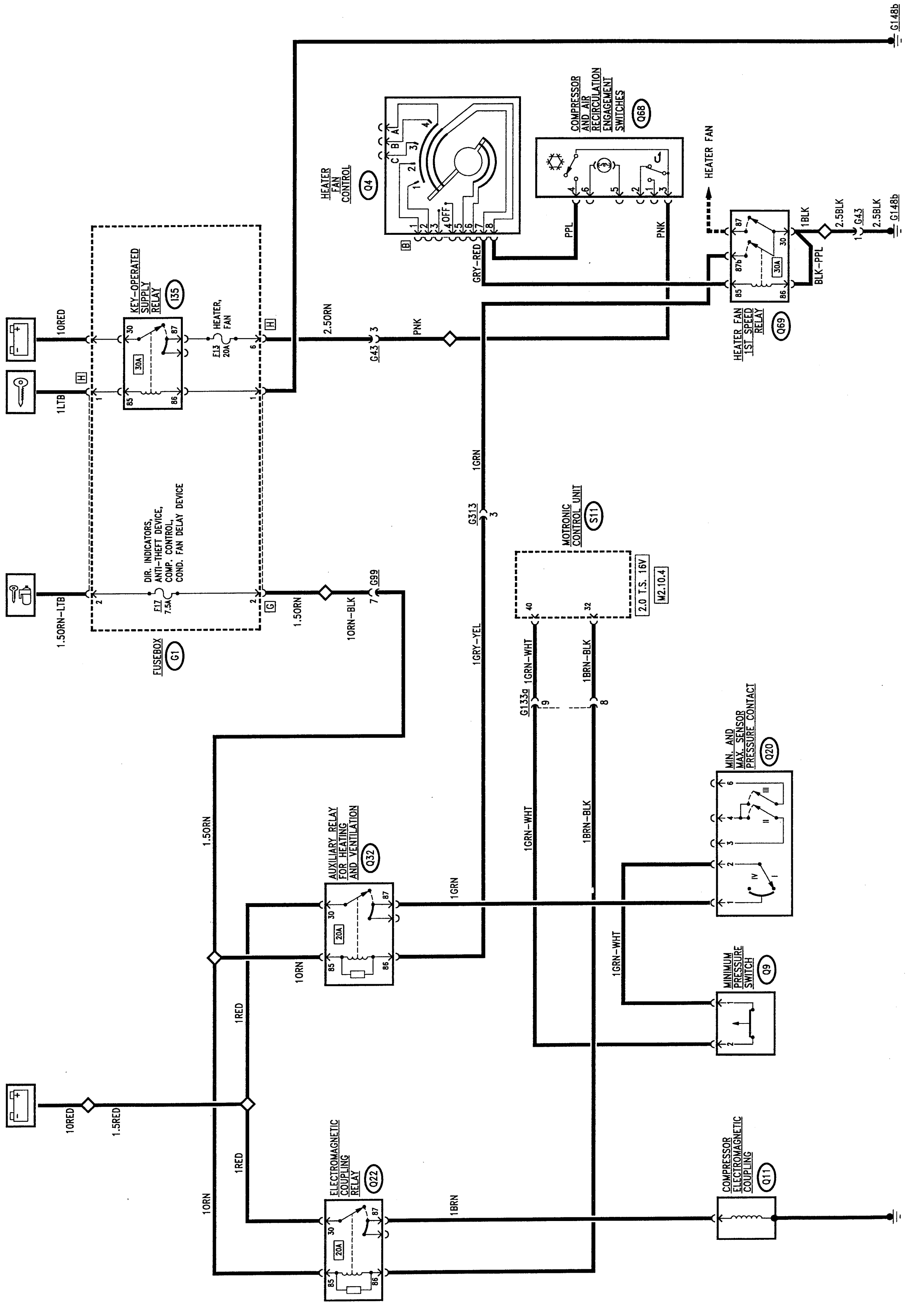

ENGINE COOLING FANS CONTROL

3.0 V6 Engine

Two fans **P2a** and **P2b** warrant the necessary ventilation of the cooling air for the engine and air conditioning system condenser.

N.B.: the two fans are set in parallel and they are always operated together, following the same logic.

The two fans are always supplied by battery voltage: the first one (**P2a**) has the line protected by floating fuse **G254**; the second one (**P2b**) is protected by floating fuse **Q39** (30A); they are therefore operated by an earth signal: this signal arrives directly (2nd speed) or through the additional resistances **O22** and **022b** (1st speed) fitted with a thermal safety fuse.

The delaying device **Q42**, in group **Q41**, controls the gradual turning on of the fans which are operated at two different speeds also via two relays **I99b** and **I100**, also part of group **Q41**.

The delaying device works according to the following logic:

The "key-operated" voltage (line protected by fuse **F17** of **G1**) supplies the coil and electronic devices of the delaying device **Q42** -pin 85, and relays **I99b** and **I100**; the coil of delaying device **Q42** is energized by an earth signal -pin P- which leads from the trinary pressure switch **Q20**: this causes an earth signai to be sent immediately - pin 30 - to energize relay **I99b** which sends the earth to the two engine cooling fans **P2a e P2b** through the additional resistances **O22a** and **022b**: 1st speed.

After appr. 8-12 seconds, if the signal from the trinary persists, the delaying device operates the second speed: in fact, the earth signal from pin 30 is cut off and another signal leaves pin 86 which goes to energize relay **I100** which sends the earth signal directly to the two engine cooling fans **P2a e P2b:** 2nd speed. When the signal from the pressure switch ceases the fans turn off.

The two fans are operated at the two different speeds also by the two-level thermal contact **L33** which controls the temperature of the coolant in the engine radiator: when a first level is reached, relay **I99a** is energized, which is located on the bracket next to fusebox **G1** - which sends the earth signal to the two engine cooling fans **P2a** and **P2b** through resistances **O22a** and **022b**: 1st speed. Relay **I99a** receives the "key-operated" supply from the line protected by fuse **F4** of **G1**.

If the second temperature level is reached, relay **I100** is energized, which is located in group **Q41**, and this sends the earth signal directly to the two engine cooling fans **P2a and P2b**: 2nd speed.

Wiring diagram (3.0 V6 engine)

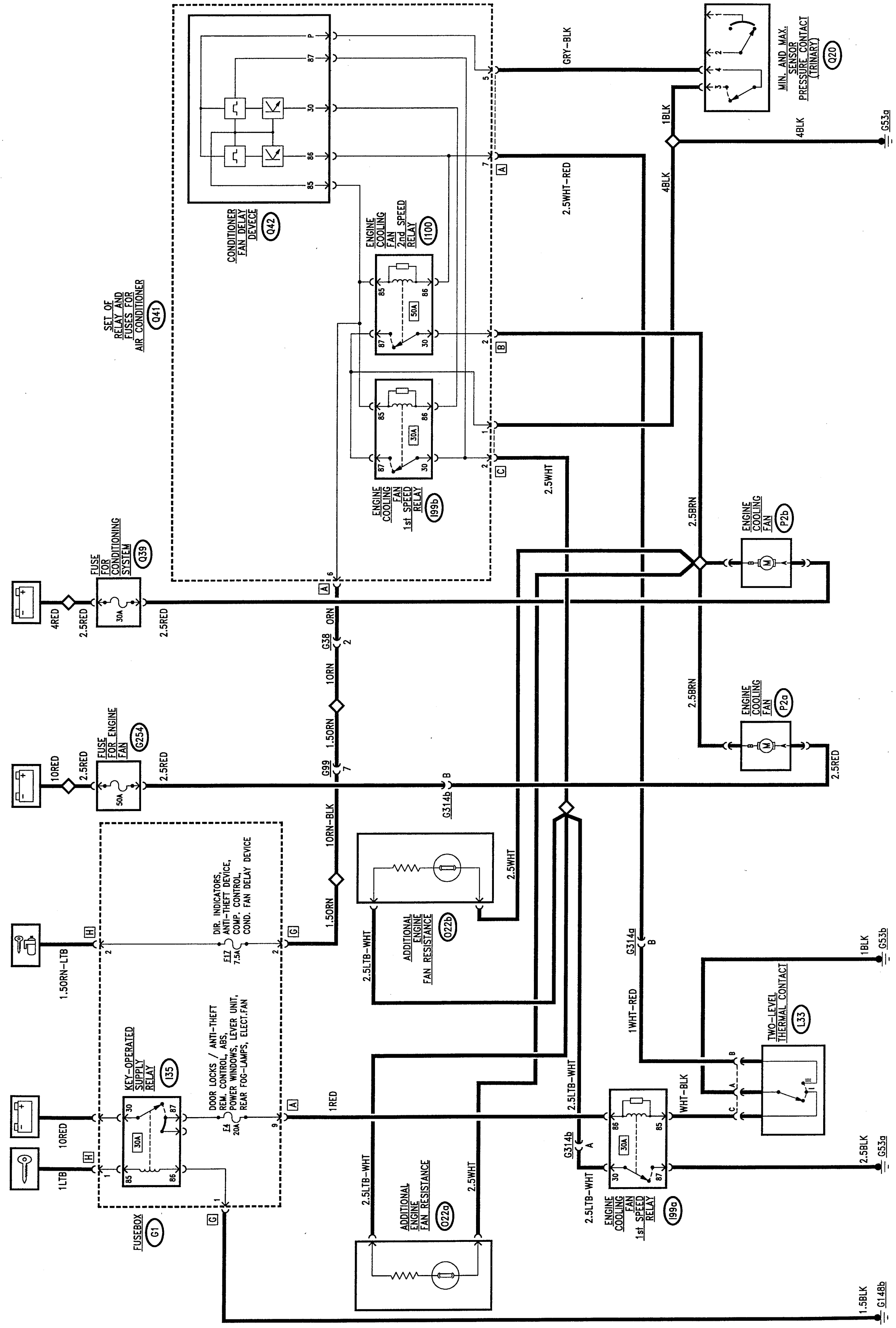

ENGINE COOLING FAN/S CONTROL

2.0 T.S. 16v engine (up to chassis no. 6023906)

Only one fan **P2** provides ventilation for cooling the engine radiator and air conditioner condenser:

This fan **P2** is supplied by battery current up to chassis no.___ via fuse **Q39** (30A) and from chassis no.__ by fuse **G254** (50A), and it is controlled by an earth signal in the same way as described for the 3.0 V6 engine, with the exception of the fact that there is only one additional resistance **O22** for operating 1st speed.

2.0 T.S. 16v engine (from chassis no. 6023907)

Two fans **P2a** and **P2b** provide the necessary ventilation of the air for cooling the engine radiator and the conditioner system condenser.

N.B.: the two fans are in parallel and are therefore always operated together, always following the same logic:

The two fans are always supplied by battery current via the line protected by wander fuse **G254**; they are operated by an earth command signal: this signal arrives directly (2nd speed) or through the additional resistances **O22a** and **O22b** (1st speed), fitted with a safety thermal fuse.

The M2.10.4 injection - ignition control unit handles the control of the engine coolant and air conditioning system fluid fans.

This way the thermal contact usually located on the radiator has been eliminated. The two speeds of the fans are operated depending on the engine temperature, which is detected by the special sensor: a low "earth" signal leaves pin 26 which commands the 1st speed relay I99, and a "low" (earth) signal leaves pin 25 which commands the 2nd speed relay **I100**.

Akso pressure switch **Q20** sends special signals to the control unit for engaging the fans if the pressure of the coolant fluid in the circuit exceeds determinate values:

- over 15 bar appr. the signal is sent to pin 44 for engaging 1st speed;
- over 20 bar appr. to pin 43 for 2nd speed.

The "key-operated" voltage (line protected by fus **F4** of **G1**) supplies the coil of relays **I99** and **I100**; which are operated by the above-mentioned earth signals.

Wiring diagram (2.0 T.S. 16v engine - up to chassis no.6023906)

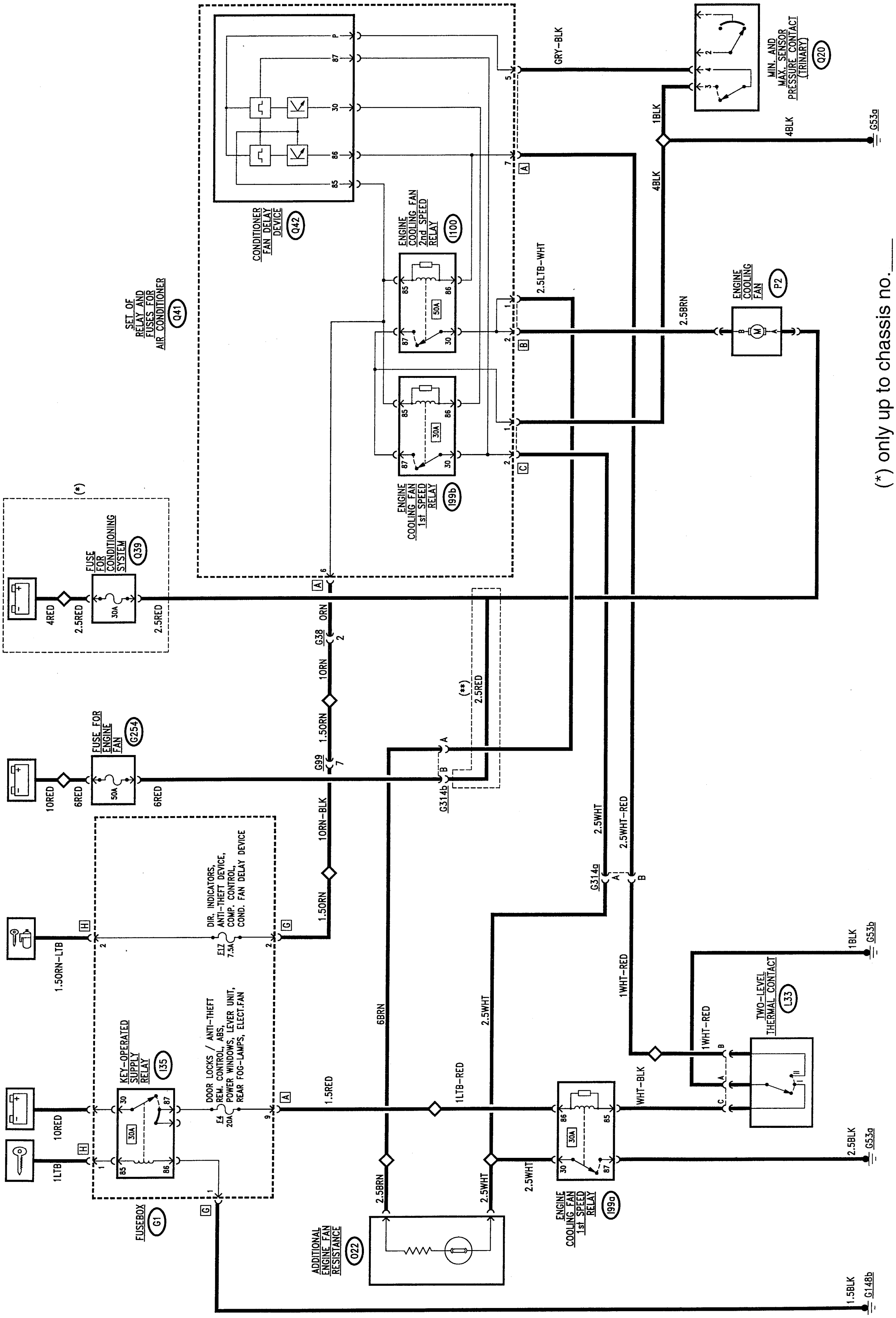

(*) only up to chassis no.___
(**) from chassis no.___

Wiring diagram (2.0 T.S. 16v engine - from chassis no.6023907)

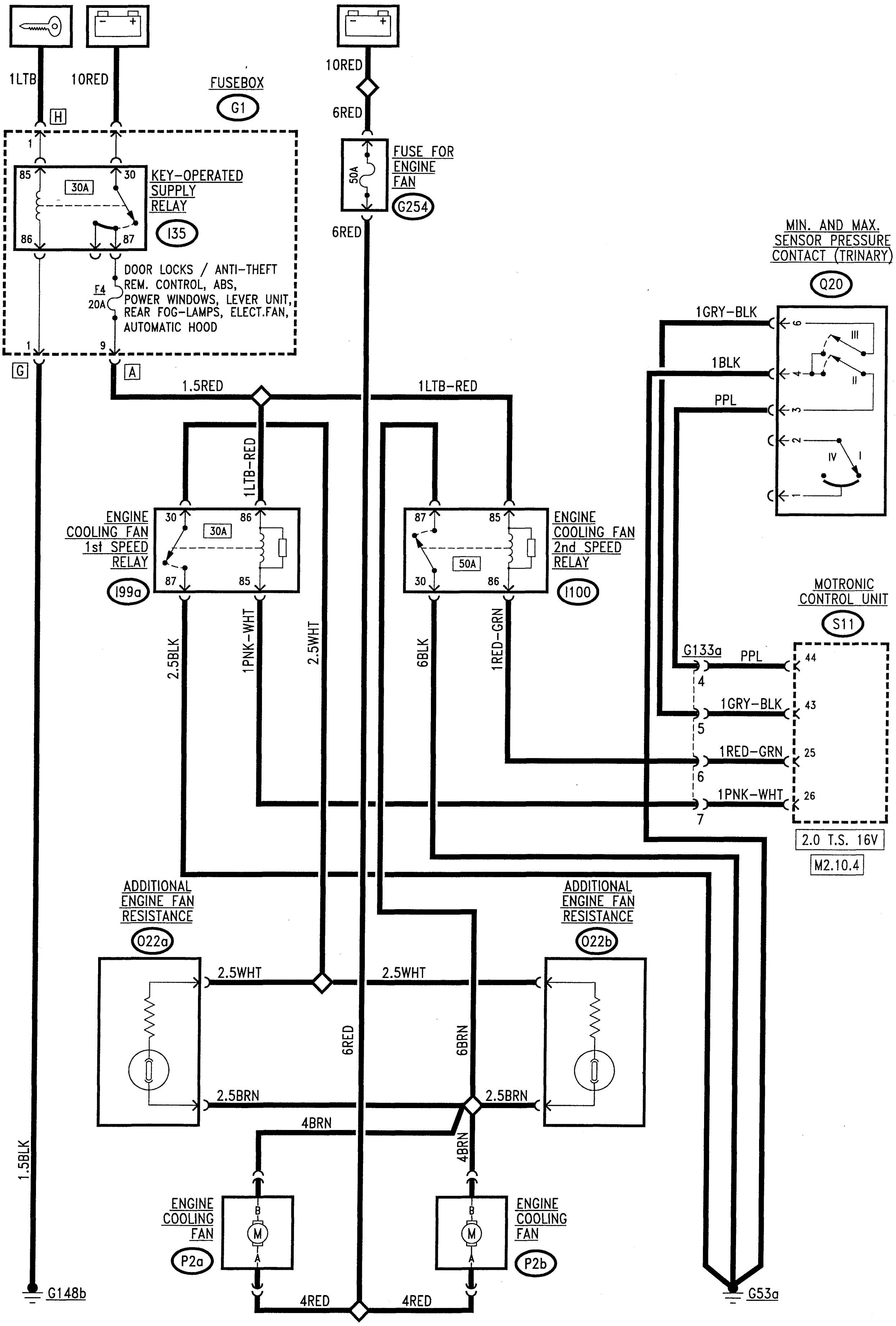

LOCATION OF COMPONENTS

up to chassis no.6023906

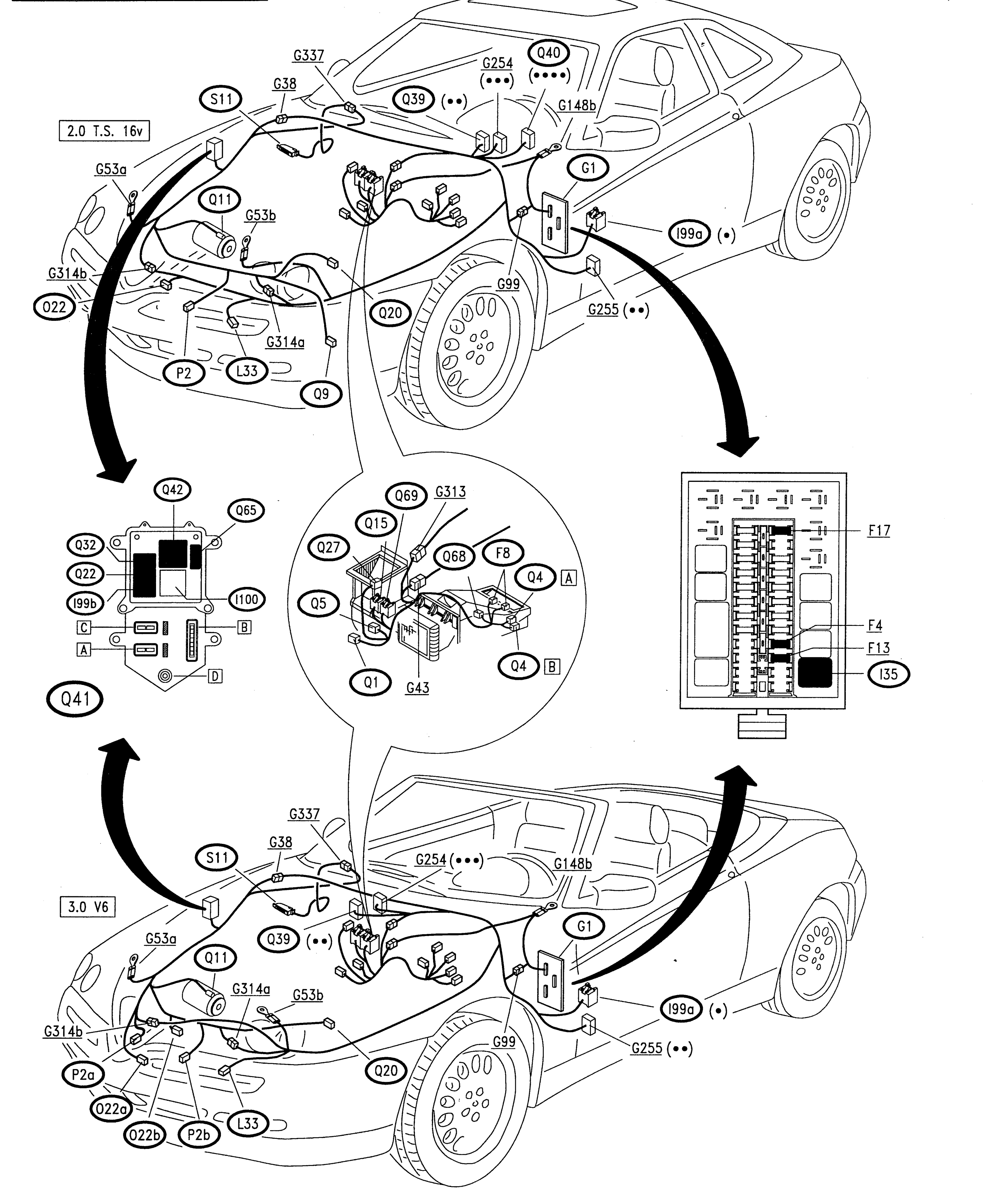

(•) Yellow base
(••) Green fuseholder
(•••) Black fuse holder
(••••) Blue fuseholder

LOCATION OF COMPONENTS

from chassis no.6023907

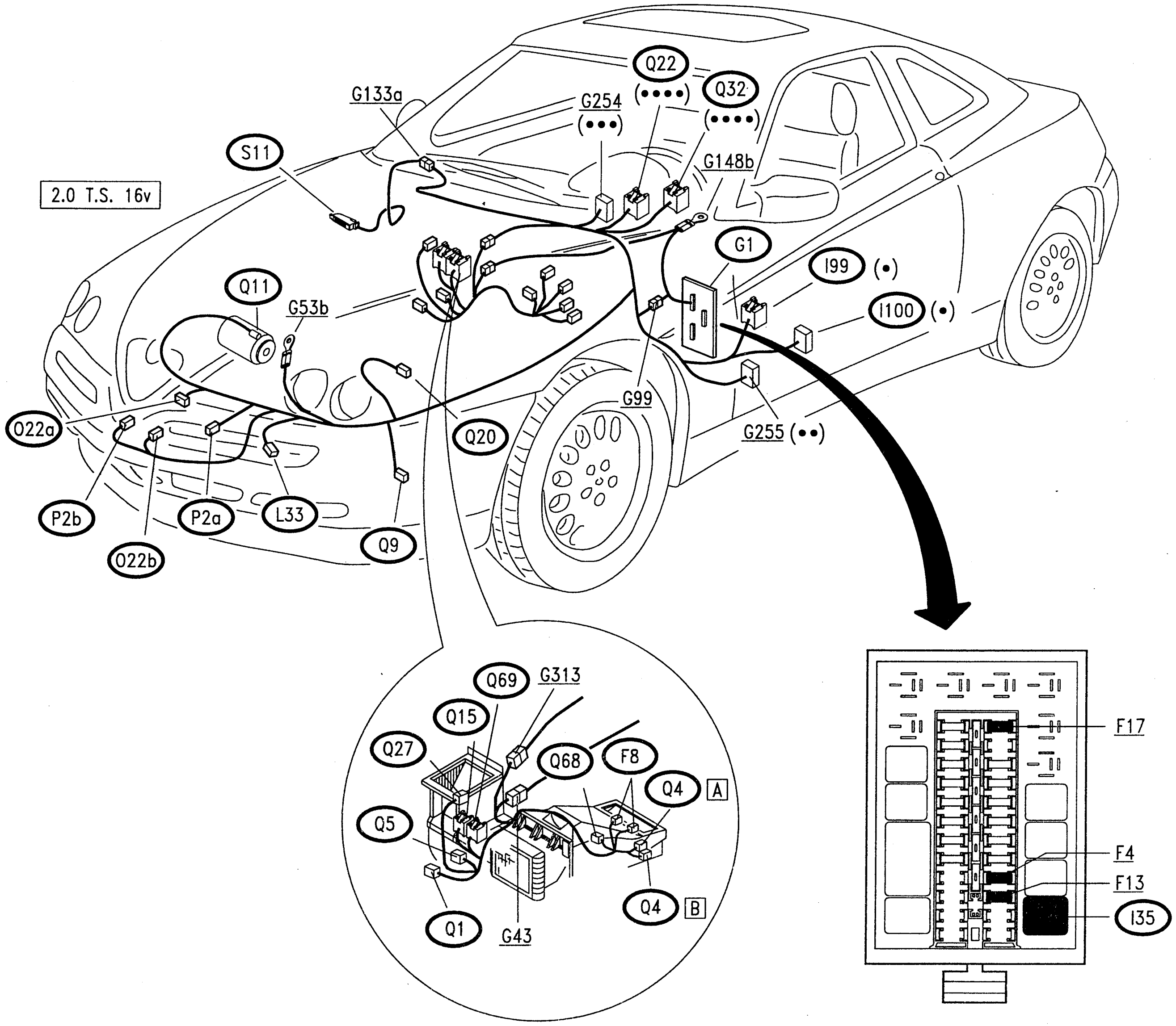

(•) Yellow base
(••) Green fuseholder
(•••) Black fuseholder
(••••) Grey fuseholder

FAULT-FINDING TABLE

NOTE:
In order to make it easier to understand, the fault-finding table for the air conditioner has been subdivided into three sections which refer to the three functions also described separately in the wiring diagrams:

- **Heating, ventilation and recirculation**
- **Compressor control**
- **Engine fan/s control**

Heating, ventilation and recirculation fan

Fault	Component to be checked										
	F13	G255	Q1	Q15	Q5	Q4	Q27	Q68	F8a (1)	F8b (1)	Q69
Fan cutting in	•	•	•	•							
Fan cutting in at diffferent speed					•	•					
Fan cutting in at 1st speed with the compressor on						•		•			•
Recirculation function						•	•	•			
Heating & ventilation control panel lighting									•	•	

(1) It is possible to change the single bulbs with bulb holders

Compressor control

Fault	Component to be checked												
	Q40 (*)	Q65 (*)	F17	F13	Q11	Q20	Q9	Q22	Q32	Q69	Q4	Q68	S11
Compressor cutting in (in all circumstances)	•	•	•	•	•			•	•	•	•	•	•
Compressor cutting in (only in certain circumstances) (•)						•	•						•

(*) Only for 2.0 T.S. 16v up to chassis no.6023906.

(•) You are reminded that the compressor is cut out by the system logic under the following conditions:
- coolant fluid pressure > 28 bar appr.;
- coolant fluid pressure < 2.5 bar appr. (circuit drained);
- coolant temperature > 160°C (only for 2.0 T.S. 16v engine);

This is also determined by the logic of the ignition/injection control unit (see the corresponding sections).

Engine cooling fan/s control

Fault	Component to be checked										
	Q39	G254	F17	P2 P2a/b	O22 022a/b	L33 (*)	S11 (**)	Q20	Q42	I99a	I100
Fan/s cutting in (in all circumstances)	•	•		•							
Fan/s cutting in at two different speeds (only one speed working)			•		•				•	•	•
Fan/s cutting in due to high engine temp. (at two speeds)						•	•				
Fan cutting in due to high coolant fluid pressure (at two speeds)								•			

(*) 2.0 TS 16v engine, up to chassis n°6023906

(**) 3.0 V6 engine from chassis no.6023907

CHECKING COMPONENTS

Heating and ventilation fan Q1

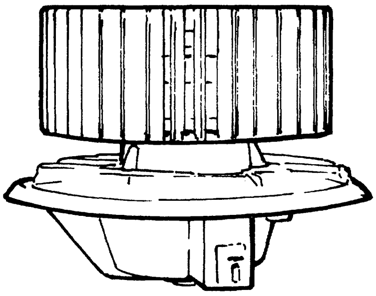

SPECIFICATIONS	
Nominal voltage	12V
Speed at 12V/25°C in free air with impeller and support	3400 $^{+200}_{-100}$ rpm
Power output at 12V/25°C at the above speed	90 W
Direction of motor rotation	leftwards impeller side

Heating and ventilation fan control Q4

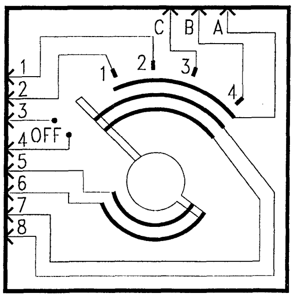

Check the contacts corresponding to the different positions of the knob.

Heating & ventilation fan speed adjustment coil (Q5)

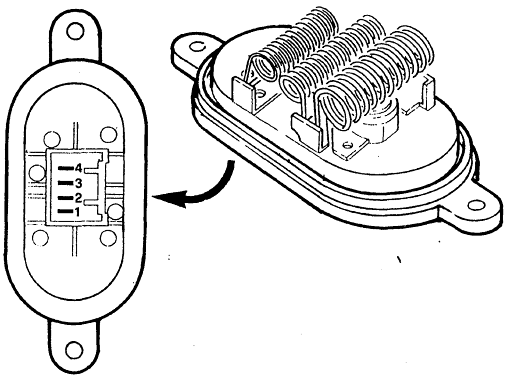

SPECIFICATIONS		
Section crossed	Total resistance	fan speed
4-1 3-1 2-1 none	2.9 Ω 0.8 Ω 0.3 Ω -	1st 2nd 3rd 4th
Thermal contact cut-in temperature		90 ± 5°C

Recirculation port control motor (Q27)

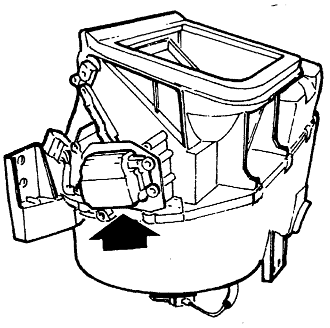

SPECIFICATIONS
12 V at pin 1 and 0 V at pin 2 = **counter-clockwise** rotation of output shaft
12 V at pin 3 and 0 V at pin 2 = **clockwise** rotation of output shaft

Compressor electromagnetic joint (Q11)

3.0 V6

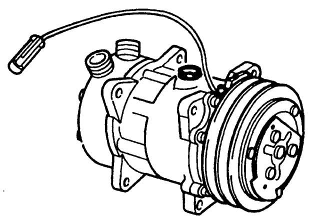

2.0 T.S. 16v

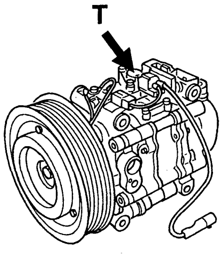

SPECIFICATIONS	
Supply voltage	12 V
absorbed current	4 A (3.0 V6) 2.2 A (2.0 T.S. 16v)
Compressor cutout thermal contact (only 2.0 T.S. 16v) (T)	
contact opens	> 160°C
contact closes	< 140°C

Minimum and maximum pressure switch (trinary) Q20
(2.0 TS 16v engine up to chassis no.6023906)

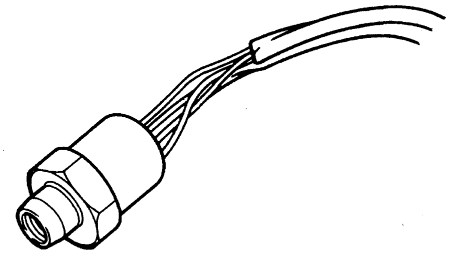

SPECIFICATIONS	
1. level: contact opens contact closes	 2.45 ± 0.25 bar 2.85 ± 0.50 bar
2. level: contact closes contact opens	 15.2 ± 0.98 bar 11.28 ± 1.99 bar
3. level: contact opens contact closes	 28^{+2}_{-3} bar 22^{+4}_{-5} bar

Minimum pressure switch (antifrost) Q9
(for 2.0 T.S. 16v engine only)

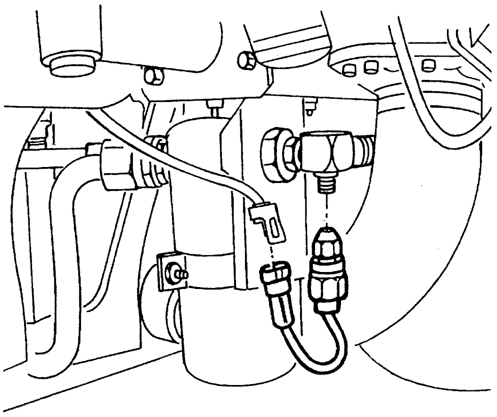

SPECIFICATIONS	
Contact opening pressure	1.8 ± 0.07 bar
Contact closing pressure	3 ± 3.5 bar

Cooling fan P2a P2b
(3.0 V6 and 2.0 TS 16v from chassis no.6023907)

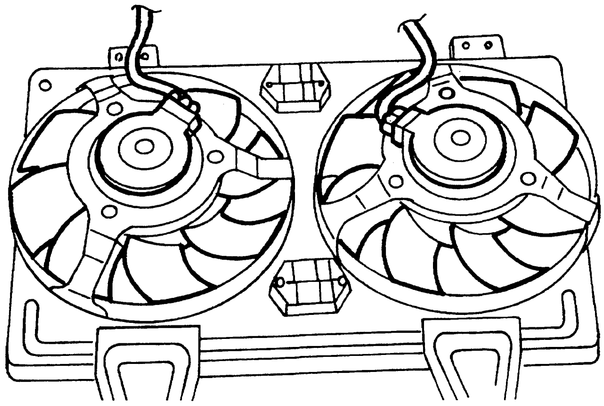

SPECIFICATIONS	
Nominal voltage	12V
Max. current absorption	26A
Speed at 12V in free air with duct	3600 ± 150 rpm (minimum)
Motor direction of rotation (shown on duct)	rightwards (impeller side)

Cooling fan (P2)
(2.0 T.S. 16v up to chassis no.6023906)

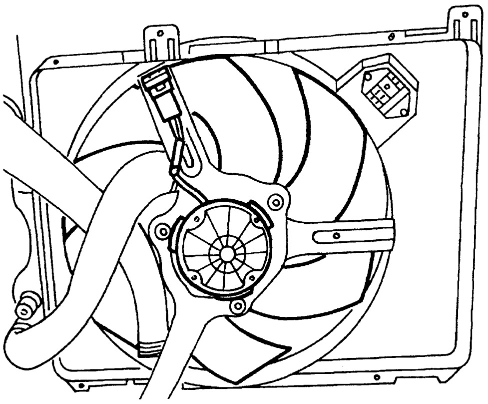

SPECIFICATIONS	
Nominal voltage	12V
Max. current absorption	25A
Speed at 12V in free air with duct	2350 ± 150 rpm (minimum)
Motor direction of rotation (shown on duct)	rightwards (impeller side)

Two-level thermal contact (L33)
(2.0 TS 16v up to chassis no.6023906)

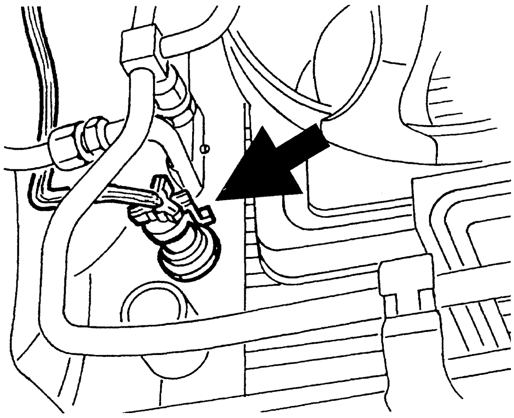

SPECIFICATIONS	
1. level: contact closes contact opens	92 ± 2 °C 87 ± 2 °C
2. level: contact closes contact opens	97 ± 2 °C 92 ± 2 °C

Engine fan resistance (O22)

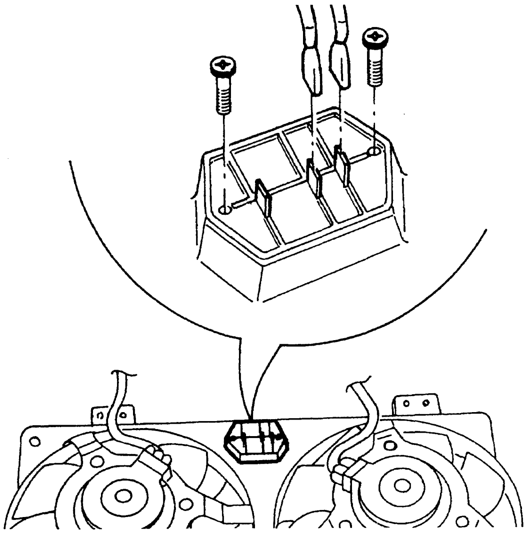

SPECIFICATIONS	
resistance	0.18 ± 10%Ω
thermal fuse cut in	126 °C

Engine fan delaying device (Q42)
(3.0 V6 and 2.0 TS 16v up to chassis no.6023906)

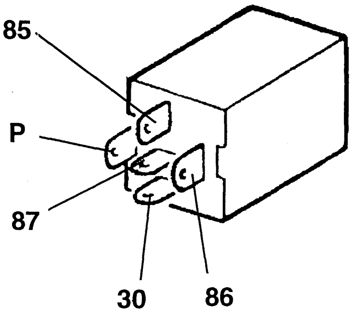

SPECIFICATIONS

A = pin P: earth signal
B = output pin 30: 1st speed
C = output pin 86: 2nd speed

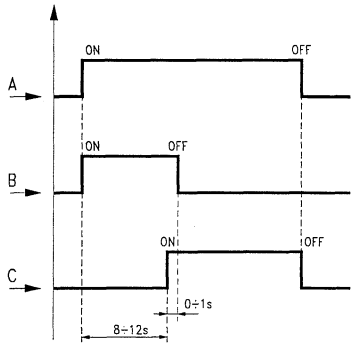

Operating diagram

4-level pressure switch (2.0 TS 16v from chassis no. 6023907)

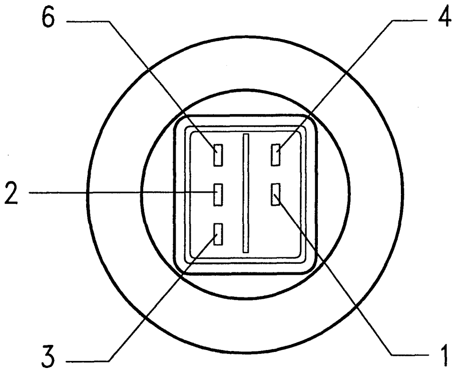

SPECIFICATIONS	
1st level: contact opens contact closes	2.45 ± 0.35 bar max 3.5 bar
2nd level: contact closes contact opens	15 ± 1 bar 11 ± 2 bar
3rd level: contact closes contact opens	20 ± 1.2 bar 16 ± 2.2 bar
4th level: contact opens contact closes	28 ± 2 bar 22 ± 4 bar

pin 1 and 2	*1st and 4th level*
pin 3	*2nd level*
pin 4	*earth*
pin 5	*N.C.*
pin6	*3rd level*

ENGINE COOLING
(versions with heater)

INDEX

WIRING DIAGRAM (3.0 V6 and 2.0 TS 16v up to chassis no.6023906)

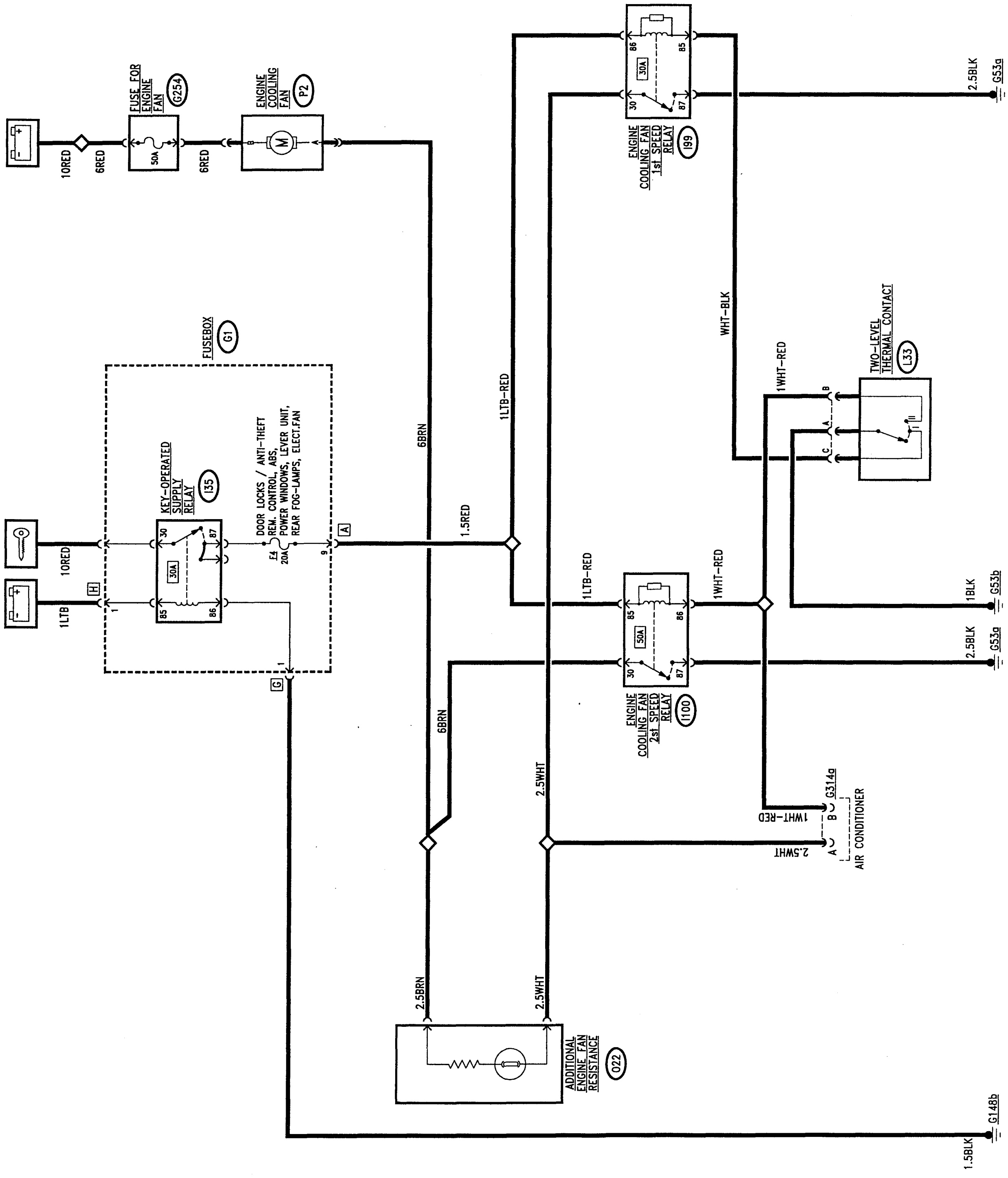

WIRING DIAGRAM (2.0 TS 16v from chassis no.6023907)

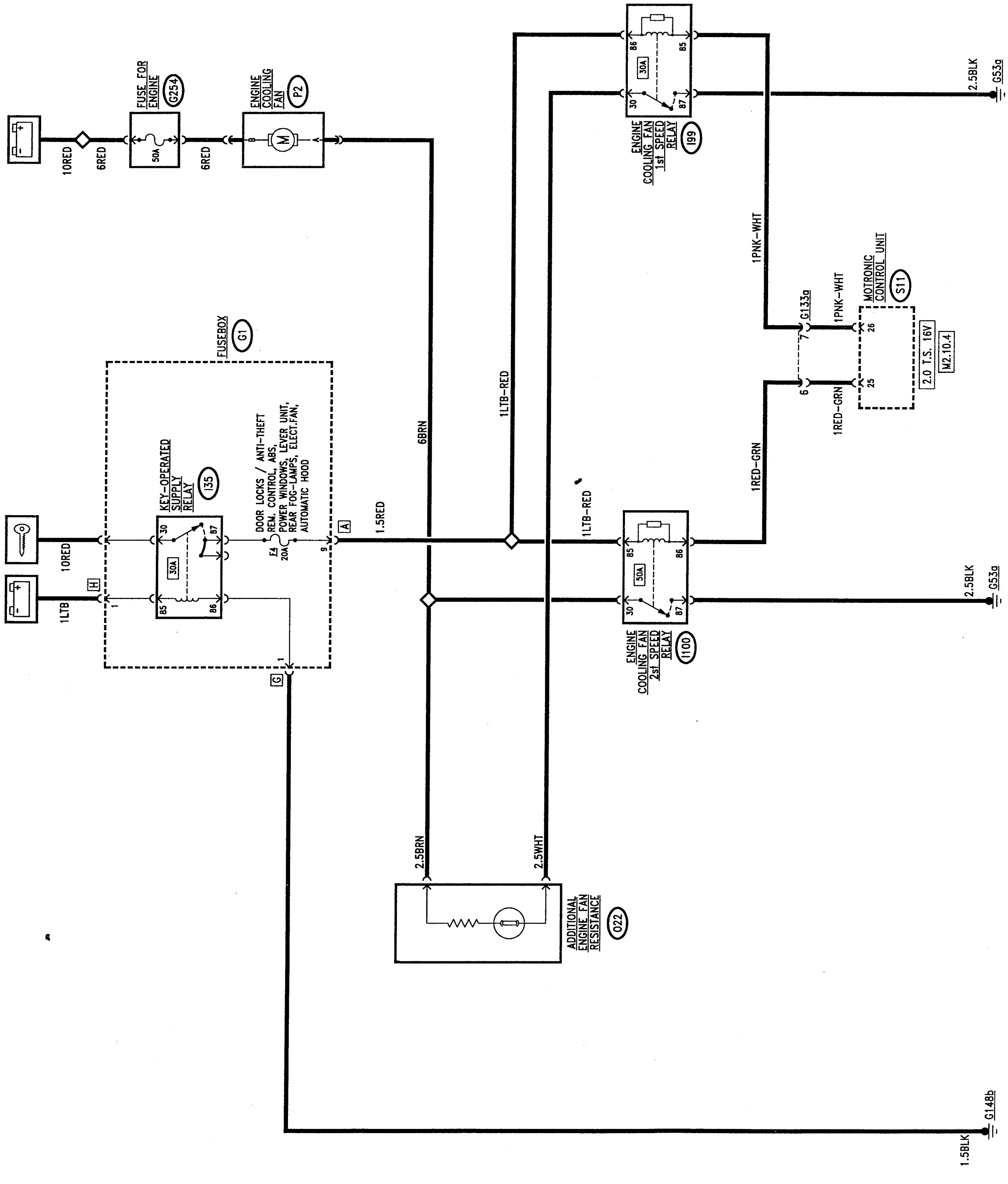

GENERAL DESCRIPTION

A fan helps the radiator to disperse the heat of the engine coolant, due to a thermometric switch that detects when the coolant temperature is too high and turns on the fan at two different speeds: the first one is operated at a first level of temperature of the coolant; the second is operated at a higher temperature.
N.B. This wiring diagram only refers to cars with heater: for cars fitted with air conditioner, see the "engine cooling fan/s control" electric circuit shown in the "Air Conditioner" section.

N.B: The fan is operated by relays suppled from the ignition block: therefore **the fan will not turn on if the ignition switch is not in the MARCIA position**.

FUNCTIONAL DESCRIPTION

The fan **P2** is supplied directly with battery voltage via a special fuse **G254** (50A), and is actuated through an earth at the opposite terminal: if this earth leads directly from relay **I100** the 2nd speed is activated; when it leads from relay **I99** and crosses the additional resistance **O22**, the 1st speed is activated.

In fact, the fan operates at two different speeds, due to an additional resistance: the first speed is engaged at the first temperature level of the coolant detected by the thermal contact; the second speed cuts in at higher temperature (second level). The additional resistance is protected internally by a thermal fuse that cuts off the electric circuit if the temperature exceeds 126°C appr.

3.0 V6 and 2.0 TS 16v engine, up to chassis no.6023906

The signal from the 1st level (87-92°C) of the two-level thermal contact **L33** energizes relay **I99** - supplied from the ignition switch by the line of relay **I35** and fuse **F4** of **G1** - thereby sending an earth signal to the additional resistance **O22** and from this to the fan, which is operated at the 1st speed.

Conversely, if the coolant fluid reaches the 2nd level (92 - 97°C) of thermal contact **L33**, the earth signal energizes the coil of relay **I100** - supplied from the ignition block via relay **I105** directly operating the fan **P2** at 2nd speed.

NOTE: the diagram also shows the connections with the air conditioning system, which utilises part of this circuit as illustrated in the "Air Conditioner" section.

2.0 TS 16v engine, from chassis no.6023907

The M2.10.4 injection - ignition control unit also handles the control of the engine coolant and air conditioning system fluid fans.
This way the thermal contact **L33** located on the radiator has been eliminated.

The two speeds of the fans are operated depending on the engine temperature, which is detected by control unit **S11** through the special sensor: a low "earth" signal leaves pin 26 which commands the 1st speed relay **I99**, and a "low" (earth) signal leaves pin 25 which commands the 2nd speed relay **I100**.

FAULT-FINDING TABLE

Fault	Component to be checked							
	F4	G254	P2	L33 (*)	S11 (**)	O22	I99	I100
Fan (at all times)	●	●	●					
Fan (fails to start though the fluid temperature is high)				●	●	●		●
Fan, at 2 different speeds				●	●	●	●	●

(*) 2.0 TS 16v engine: up to chassis no.6023906
(**) 2.0 TS 16v engine: from chassis no.6023907

LOCATION OF COMPONENTS

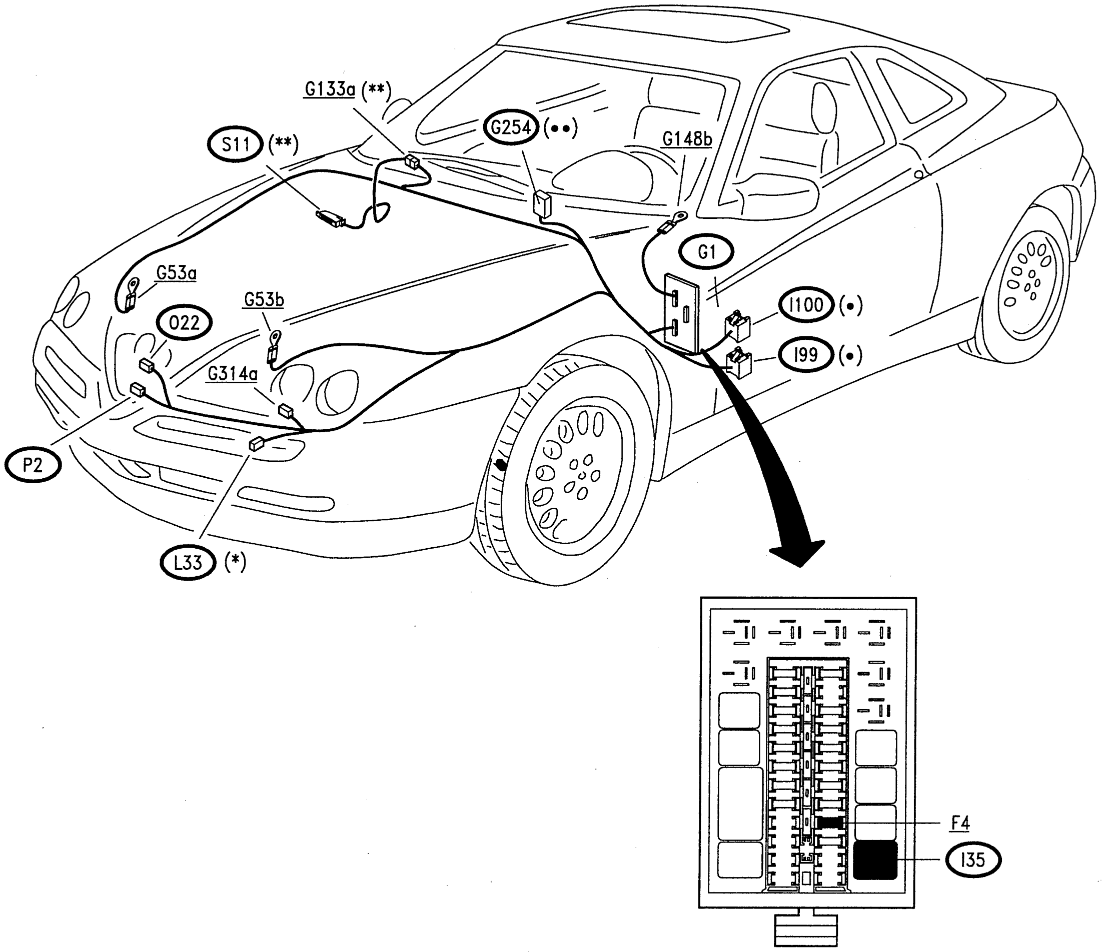

(*) 2.0 TS 16v engine - up to chassis no.6023906
(**) 2.0 TS 16v engine - from chassis no.6023907

(•) Yellow base
(••) Black fuseholder

CHECKING COMPONENTS

Cooling fan (P2)

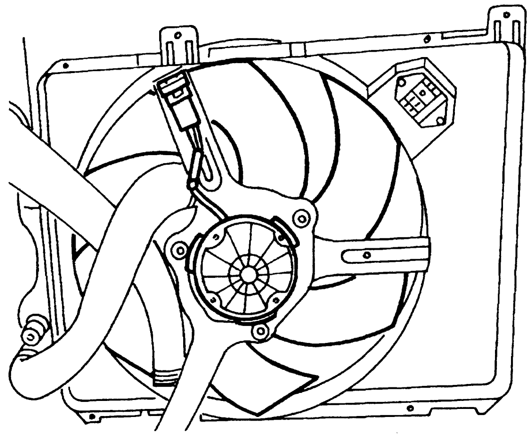

SPECIFICATIONS	
Nominal voltage	12V
Max. current absorption	25A
Speed at 12V in free air in duct	2350 ± 150 rpm (minimum)
Direction of rotation of motor (indicated on duct)	rightwards (impeller side)

Fan two-level thermal contact (L33)

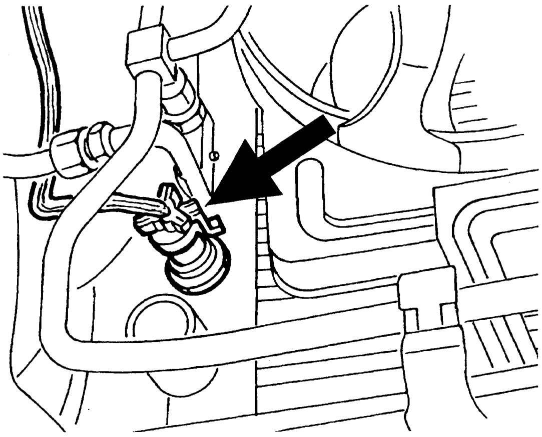

SPECIFICATIONS	
1st level: contact closes contact opens	92 ± 2°C 87 ± 2°C
2nd level: contact closes contact opens	97 ± 2°C 92 ± 2°C

Fan resistance (O22)

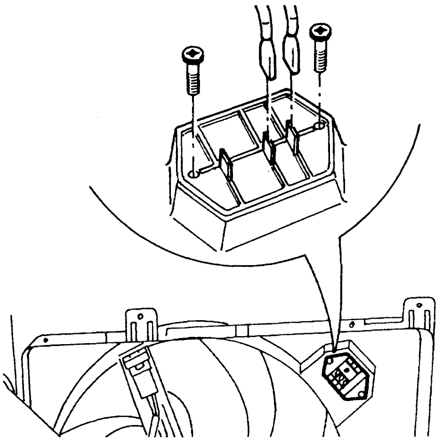

SPECIFICATIONS	
resistance	0.18 ± 10% Ω
thermal fuse cut in	126 °C

ALFA ROMEO CODE

INDEX

GENERAL DESCRIPTION

The car is fitted with an electronic code system (ALFA ROMEO CODE) which inhibits the control of the engine operated by the ignition keys.

Turning the key to the MARCIA position the Engine Control System Control unit (**C.C.M.**) requests the code from the Control unit of the ALFA ROMEO CODE system - Electronic Key Control Unit (**C.C.E.**). Once it has received the code, it compares it with the code in its memory (**MASTER CODE**).
If the comparison of the code received with the one memorised is positive the C.C.M proceeds with normal electronic engine management (starting, ignition, injection, etc.).
If not, (wrong code, various faults, etc.) the C.C.M. does not carry out engine management and the car will not start.
The C.C.M. offers the possibility to start the car without having received the MASTER CODE by the emergency procedures using the Code Card or the Alfa Tester (see recovery procedures).
The code transmitted to the engine control system control unit (allowing over 4 billion combinations) is computed by an algorithm which makes each transmission between C.C.M. and C.C.E. different from the previous one. (variable, crypted code).

If the code has not been recognised correctly the ALFA ROMEO CODE warning light stays on, together with the injection system failure warning light.

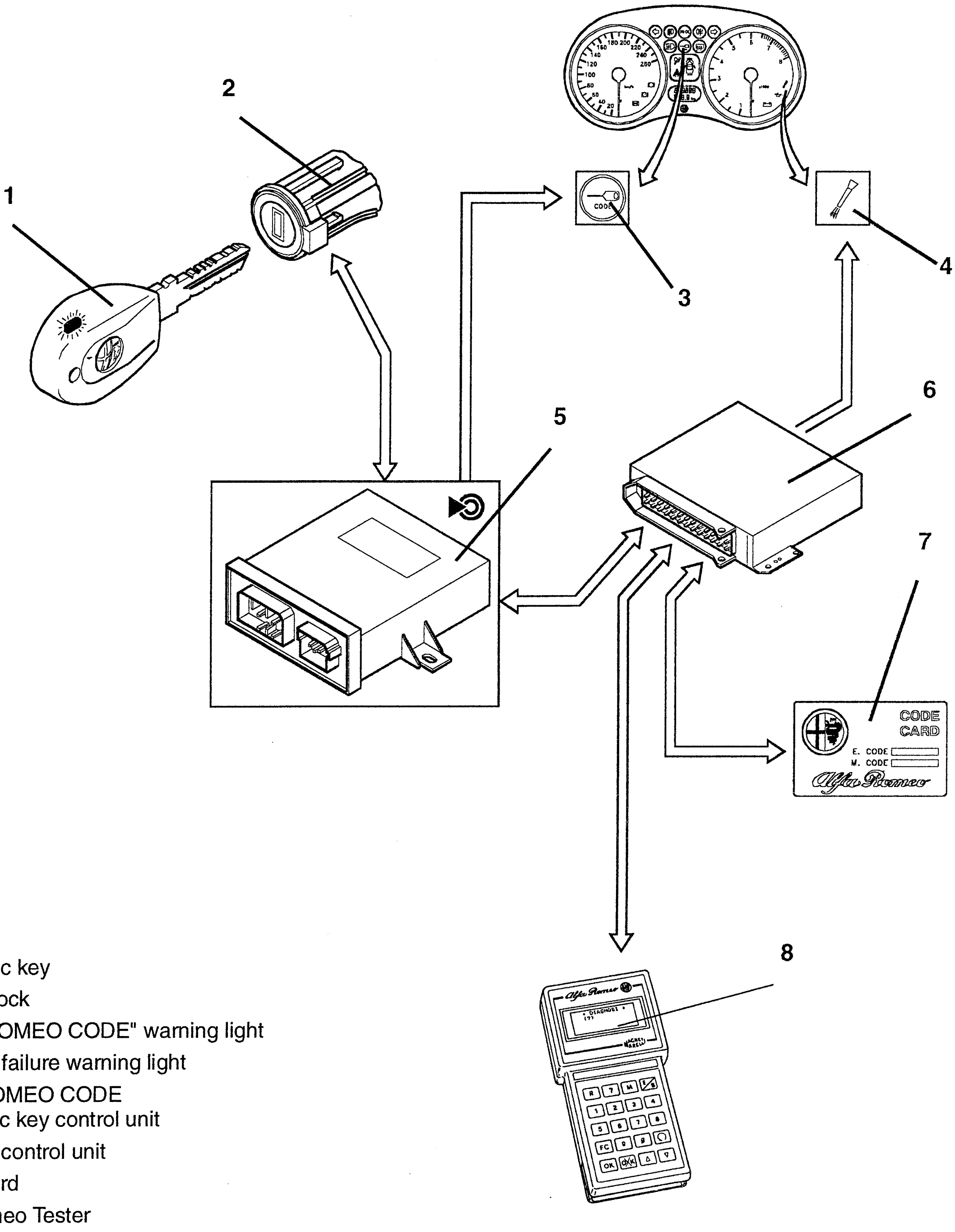

1. Electronic key
2. Ignition lock
3. "ALFA ROMEO CODE" warning light
4. Injection failure warning light
5. ALFA ROMEO CODE
   Electronic key control unit
6. Injection control unit
7. Code Card
8. Alfa Romeo Tester

DESCRIPTION OF COMPONENTS

The system comprises the following components:

Keys

The following are supplied:

- An electronic key *A:* **"MASTER" key**
- Two main electronic keys ***B* (with Alfa Romeo badge)**
- An electronic **service key *C* (without Alfa Romeo badge)** only to be used when leaving the car in custody as it is impossible to use it for opening the luggage compartment and glove box.

The keys contain an electronic circuit called Transponder, which contains the code which characterises them; this is transmitted to the Electronic key control unit (C.C.E.) when the key is turned to the MARCIA position. Each electronic key possesses its own code, which must be memorised by the system's electronic control unit.

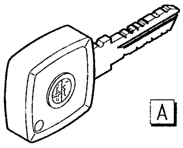

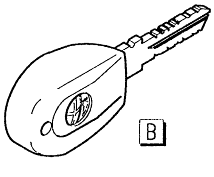

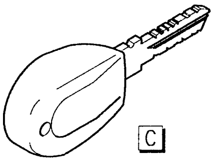

The cars are produced with the codes of the keys supplied with them already memorised, as described below:

- The C.C.E. contains the codes of the two main keys and the MASTER CODE (code of the master key)
- The C.C.M. only contains the MASTER CODE

It is very important to keep the MASTER key most carefully, since its code is memorised, through a special specific procedure (described later), in the electronic injection control unit, therefore the two control units are linked indissolubly.

If the MASTER key goes astray or is damaged, further memorising procedures of new keys will not be possible; without the MASTER key in the event of a failure to the C.C.E. it will be necessary to change the C.C.E. and the C.C.M.

The user is advised to keep the MASTER key in a safe place outside the car. In fact, it serves as an "access key" for memorising further codes (keys). The MASTER key should only be used when needing to memorise new keys.

The Transponder inside the key comprises a minute integrated circuit (which contains the code), and a coil (which supplies the integrated circuit and transmits the code).

In the main keys, the Transponder is inserted in an accessible manner, while the MASTER key has the possibility to transfer the component to another MASTER key, if the need arises (for example if the ignition lock needs replacing).

The **MASTER** key is proof of the ownership of the car: it must therefore be present (together with the Code Card), when the car is sold.

Aerial

The aerial is a loop coil which is wound round the ignition lock and is connected to the C.C.E. by a specific connector (see figure) The purpose of the aerial is firstly to supply the transponder so that it can send the code and secondly to receive the Transponder signal.

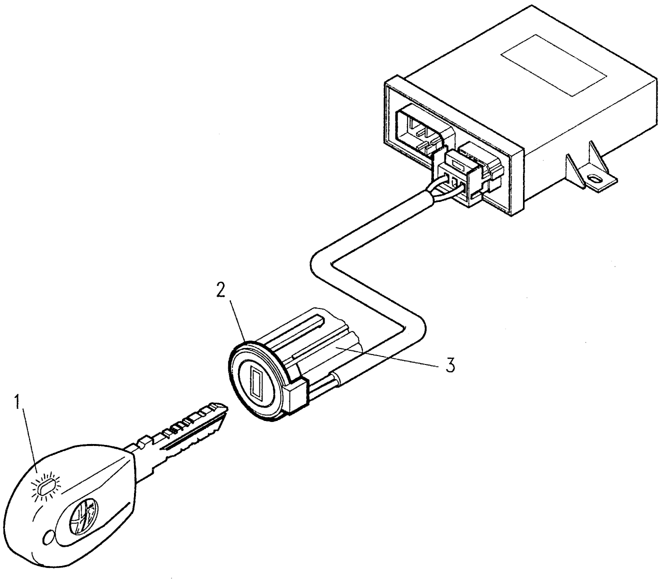

1. Transponder
2. aerial
3. ignition lock

Electronic Key Control unit (C.C.E.)

The C.C.E. is located above the fusebox; it is interfaced with the car via two connectors: B (3-way) and A (8-way) and it has the following functions:

- It detects rotation of the key in the ignition switch to the MARCIA position
- It emits an electromagnetic field to give power and activate the Transponder of the key
- It receives and computes the secret code sent by the key
- It manages the serial line (one wire) with the Motronic injection control unit
- It manages the special diagnosis warning light on the instrument cluster
- It memorises up to 8 secret codes, one of which is the MASTER CODE
- It recognises connection with the Alfa Tester and allows the use of the serial line for diagnosis

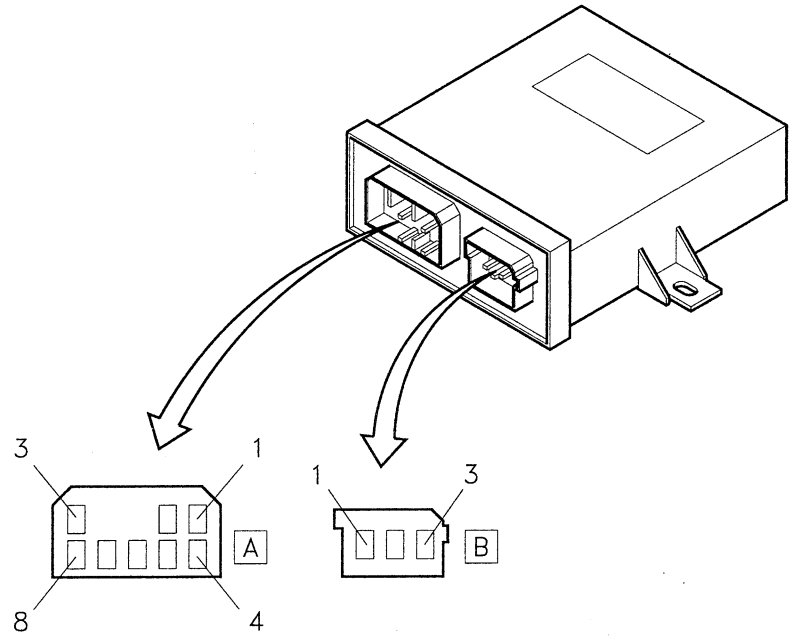

CONNECTOR A
pin 1: N.C.
pin 2: warning light signal
pin 3: direct supply
pin 4: earth
pin 5: diagnosis line K
pin 6: serial line towards the C.C.M.
pin 7: signal for outside relay (N.C.)
pin 8: key-operated supply

CONNECTOR B
pin 1: aerial signal
pin 2: N.C.
pin 3: aerial earth

Engine Control System Control Unit (C.C.M.) with software (programme) for ALFA ROMEO CODE :

Thw engine control system control units adopted on these cars are provided with functions for management of the ALFA ROMEO CODE electronic key: these functions, which are activated when the key is turned, are the following:

- Permanent memorising of the MASTER key code (MASTER CODE) by a specific procedure carried out during production testing or when the C.C.M. is changed.
- Request of the MASTER key code to the C.C.E.
- Recognition of the MASTER CODE and engine control enabling (starting the car)
- Recognition of the message (transmitted by the C.C.E.) warning that an unauthorised key has been inserted (the car will not start).
- Recovery function via the Alfa Romeo Tester (it is necessary to know the ELECTRONIC CODE written on the Code Card)
- Recovery function by entering the ELECTRONIC CODE written on the Code Card using the accelerator pedal.
- Control of the diagnosis warning light (injection failure warning light)

Absolutely never exchange the injection control units between cars to check whether they are working properly.

Therefore, during fault-finding operations, avoid changing the injection control unit, if you are not sure that it is the cause of the problem on the car (firstly check the actuators and sensors and the wiring, etc.) bearing in mind that the installation of a new control unit (never used before) will involve the permanent memorising of the MASTER CODE inside it of the next key that is turned to MARCIA; therefore, from that moment onwards this control unit will only work in combination with the keys and C.C.E. of that car.

Code Card (card with secret code)

This is a memo card the size of a credit card which is supplied with the car. (see illustration).

It contains a five-digit code (**ELECTRONIC CODE**) which makes it possible to start the engine (recovery function) when the electronic keys have been lost or damaged.

Two cards are supplied.

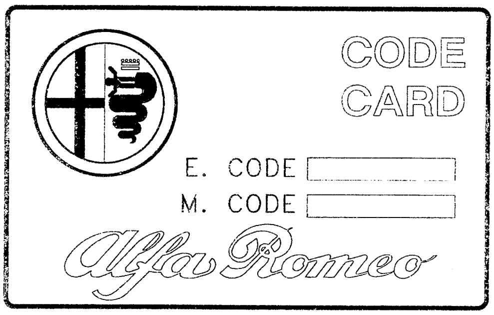

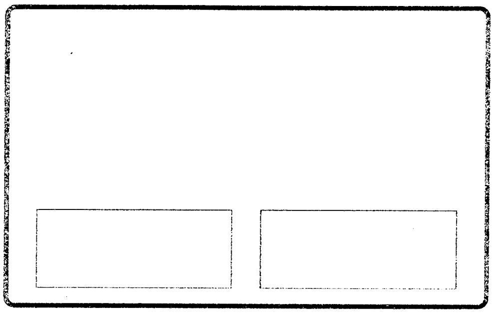

NOTE: Clearly this emergency procedure only takes account of the electronic code associated with the keys, and not the mechanical parts shared with other cars.

The Code Card should not be kept in the car, but it should be kept at hand because through the code, it will be possible to start the car without the ALFA ROMEO CODE (see the specific recovery procedure).

The Code Card, as well as the ELECTRONIC CODE (**"E. CODE"**), contains the mechanical code of the keys (**"M. CODE"**): through this code it is possible to request other keys suited to the ignition switch and to be memorised in the C.C.E.

On the back there are two special spaces for applying the labels of the transmitters supplied with the optional alarm system (V.A.S. alarm).

OPERATION: Anti-theft strategy

Each time the ignition key is turned to MARCIA the following main operations are carried out in sequence: The injection control unit asks the C.C.E. for the MASTER CODE (the one of the MASTER key memorised previously).

The C.C.E. checks that the code of the key engaged in the ignition lock corresponds to one of the codes contained in its memory.

If the key corresponds to one of the memorised codes:

the C.C.E. sending the MASTER CODE, to the injection control unit, **enables starting** (see illustration).

If the code of the key engaged in the ignition lock does not correspond to one of those memorised:

The C.C.E. informs the injection control unit that an extraneous key has been engaged and **starting will not be enabled** (see illustration) this situation will be indicated by the turning on of the electronic injection system failure warning light and the ALFA ROMEO CODE warning light.

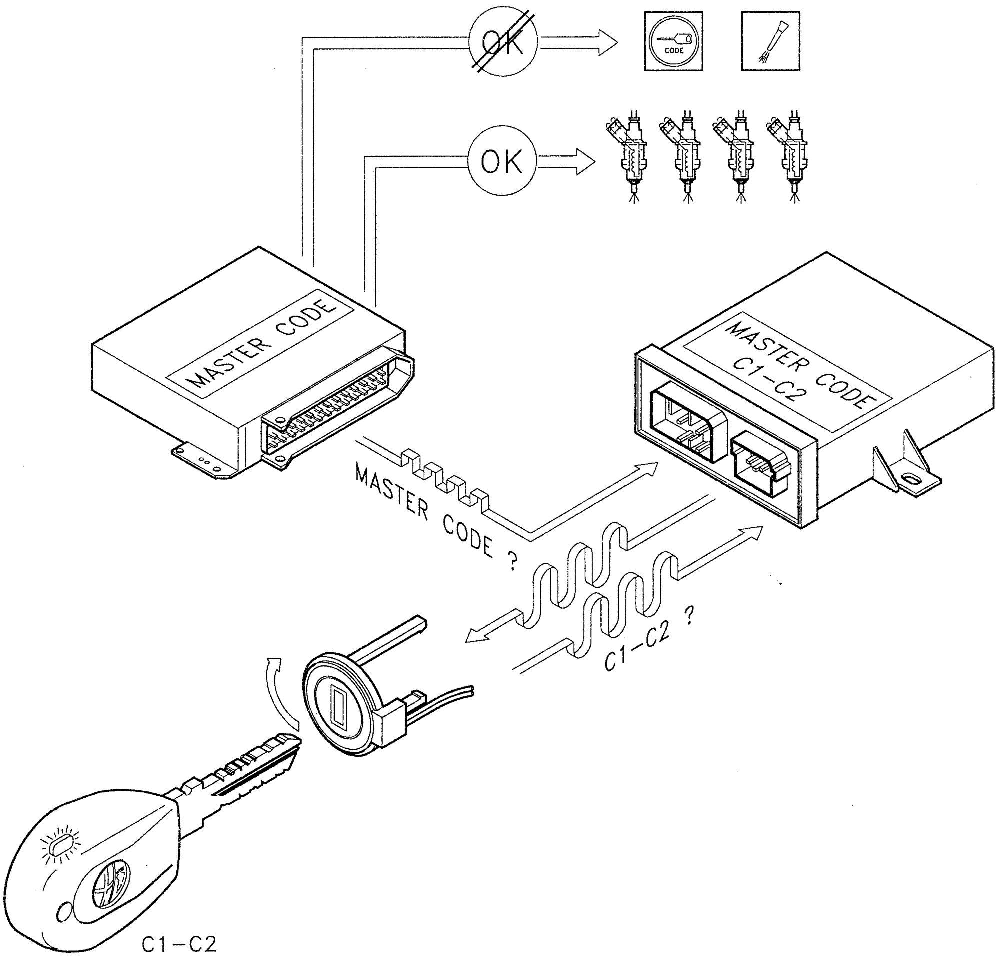

C1, C2 = key codes

Interaction between key and C.C.E.

When the C.C.E. detects the engagement of the key it sends a signal to the ends of the aerial thereby generating an electromagnetic field.

This way the Transponder coil is inductively connected and it receives the energy to supply the integrated circuit to which it is connected.

At this point the integrated circuit transmits the code.

Sharing of the serial line of the diagnosis functions and the ALFA ROMEO CODE system

(M3.7 injection - 3.0 V6 and M2.10.3 - 2.0 TS 16v engine up to chassis no. 60923906)

Inside the C.C.E. there is a shunt relay which has the purpose of enabling dialogue between the C.C.M. and the Alfa Tester or the C.C.E. itself. Pin A6 is usually dedicated to dialogue between the C.C.E. and the C.C.M (see illustration).

Line K of the diagnosis socket is connected to the C.C.E. at pin A5.

The shunt relay is normally in such a position as to allow dialogue between the C.C.E. and the C.C.M (default position).

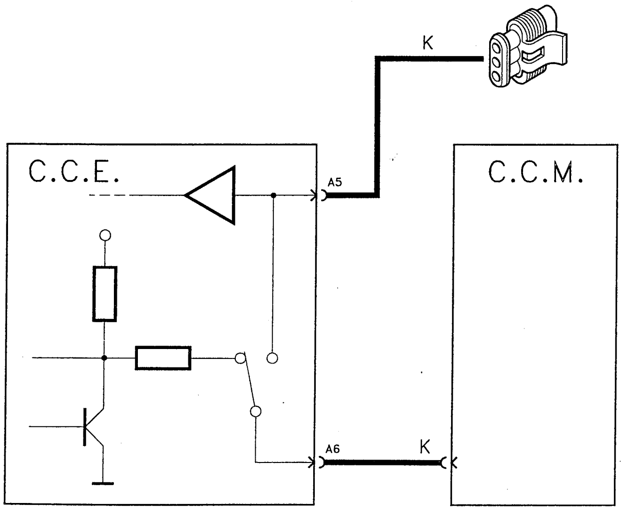

When diagnosis begins connecting with the Alfa Tester (turning the ignition key to MARCIA) the C.C.E., after ending dialogue with the C.C.M. recognises the request for diagnosis and pilots the relay to connect pin A5 and A6 to one another, thereby enabling dialogue between the tester and the C.C.M. The C.C.E enables connection with the Alfa Tester only when the following conditions occur contemporaneously:

- There is not activity on the serial line between the C.C.E. and the C.C.M.
- A low level (of voltage) is present on pin A5 for a time of between 500ms and 5s (a low level for over 5s is considered as a short circuit towards earth)

The relay returns to the default position when there is no activity on pin A5 for over 30s.

When the control unit detects that the Alfa Tester has been engaged, it turns on the ALFA ROMEO CODE warning light to indicate correct switching of the relay.

Dedicated serial line between C.C.E. and C.C.M.

(M2.10.4 injection - TS 16v engine from chassis no. 60923907)

Some injection control units have a special provision for a serial line for dialogue between the C.C.M. and the C.C.E., using pin A6 of the C.C.E. (see diagram). Line K of the diagnosis socket is NOT connected to the C.C.E. at pin A5, but it leads directly from the C.C.M. to the Tester.

Diagnosis line K is enabled by the C.C.M. only at the end of dialogue between the C.C.M. and the C.C.E.

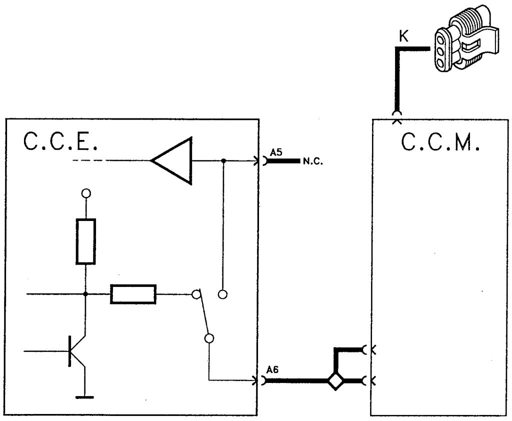

Dialogue between C.C.E. and C.C.M.

As mentioned previously, the C.C.E. and C.C.M. "dialogue" via a serial line formed of a single cable. The serial line is two-way, this means that the information travels sequentially from the C.C.M. to the C.C.E. and vice- versa. The information exchanged between the two control units may concern the following operating conditions:

A) Checking the code

C.C.E. memorised C.C.M. memorised:

Each time the key is turned to MARCIA (also during starting) the C.C.M., before starting engine management, asks the C.C.E. for the MASTER CODE. The C.C.E. can answer in one of the following three ways:

1. It sends the MASTER CODE (crypted), enabling the C.C.M. to start the car
2. It sends a code which inhibits starting the engine (if the key engaged has not been memorised, or it is a key without Transponder, aerial failure, etc.)
3. It does not answer (C.C.E. failure)

The function is governed by a programme which takes account of all the variables that might be present in the system.

B) Memorising the codes

These operations concern the system when at least one control unit (C.C.E. or C.C.M) is brand new.
The following instances may arise:

C.C.E brand new and C.C.M. brand new:

When both the control units are brand new (C.C.E. and C.C.M.) the C.C.E. answers the request of the injection control unit sending a universal code crypted by an algorithm. This condition is indicated by a characteristic flash.(1.6 Hz) of the warning light: this only takes place if the C.C.E. has detected the presence of a Transponder. Conversely, if the aerial is broken or disconnected or there is no Transponder in the key, the C.C.E. will not answer).
In this situation the system is not protected yet, and it is ready to start the key memorising procedure.

C.C.E. memorised and C.C.M. brand new:

When the ignition key has been turned to MARCIA the C.C.M. will ask the C.C.E. for the MASTER CODE to memorise it; the C.C.E. sends the MASTER CODE only if it has recognised a key among those memorised in the ignition lock: from this moment the MASTER CODE is memorised in the C.C.M. which is thus indissolubly linked with the car.

C.C.E. brand new and C.C.M. with MASTER CODE memorised:

When the ignition key has been turned to MARCIA the C.C.M. asks for the MASTER CODE to be enabled for starting. As the C.C.E. is brand new, it answers sending the universal code, only if it reads a code correctly in the Transponder. (It might be a key without Transponder or with a key with the Tramsponder not working or the aerial might be disconnected or damaged, etc.).

The C.C.M. prevents the engine from being started as it does not recognise the universal code: it is necessary to memorise the keys in the C.C.E., MAKING SURE THAT THE MASTER KEY IS THE ONE WHICH OPENS AND CLOSES THE PROCEDURE (see programming).

Piloting times of the ALFA ROMEO CODE warning light

The diagnosis warning light on the instrument panel is controlled by the C.C.E. to inform the user and workshops of the system status. There are two types of characteristic flashing:

1. <u>When the keys have already been memorised</u> (see illustration) it indicates the correct operation of the system or a problem:

2. <u>When the system is still brand</u> new the flash (1.6 Hz after 2.5 seconds) means that the system is intact and working, the car is not protected until a key memorising procedure has been carried out, other faults detected are also indicated (see illustration)

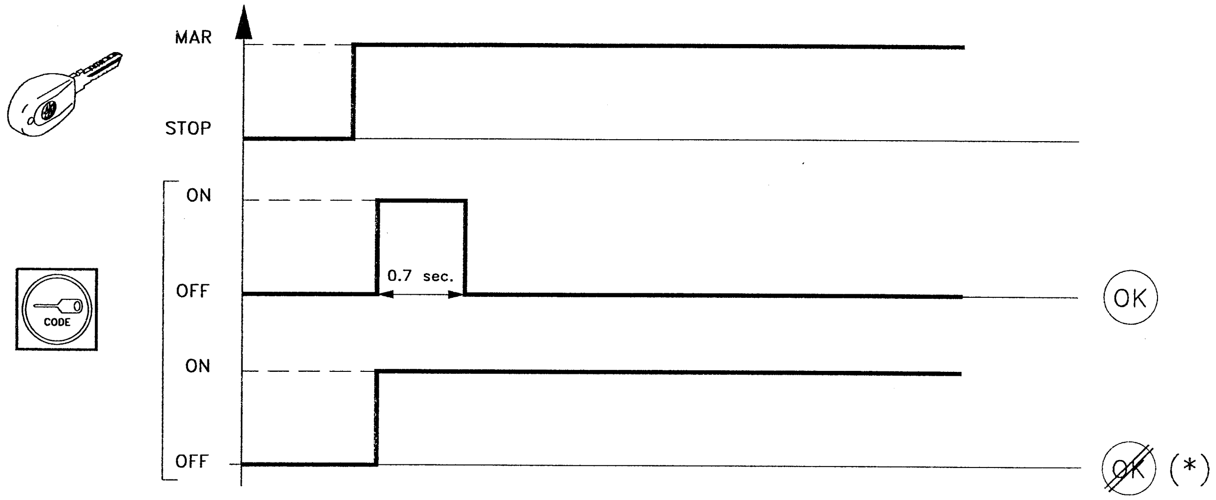

(1)

(*) - Transponder not recognised/absent/faulty
- lack of connection between C.C.E. and C.C.M
- aerial faulty/disconnected
- C.C.E. faulty
- re-memorising not carried out correctly

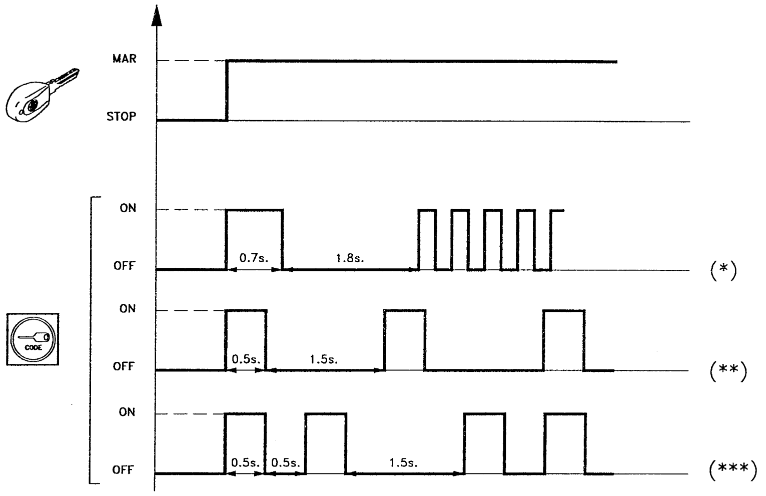

(2)

(*) system intact, working but brand new, car not protected

(**) lack of connection between CCE and CCM

(***) -Transponder not recognised/absent/faulty
- aerial faulty/disconnected

WARNING!
If the ALFA ROMEO CODE warning light turns on momentaneously or permanently while travelling or starting the car, this does not necessarily mean a system failure, but, in certain cases, it means a condition that can be interpreted as an attempt to manipulate the vehicle by a thief.

Should this occur, to correctly check the car, turn the engine off and move the key to STOP; then turn the key back to MARCIA: the warning light should turn on and off in less than one second.

If it stays on after this procedure, repeat the operation, leaving the key at STOP for more than 30 seconds. If the warning light still stays on when the key is in the MARCIA Position, carry out diagnosis on the ALFA ROMEO CODE system.

PROGRAMMING THE KEYS

The system is capable of memorising up to 7 keys plus the MASTER KEY. Correct memorising needs two keys plus the MASTER key.

During production testing the keys were memorised and the system is tested and working. If the need arises, for servicing reasons, to replace faulty components or there is the need for more keys than those supplied, the key memorising procedure must be carried out. There are two types of ways to memorise the keys :

- **Memorising** procedure, with a brand new system (C.C.E. and C.C.M. new).
- **Re-memorising** procedure, which is carried out under the following circumstances:
  - the addition of other keys besides those already memorised in the C.C.E.
  - if it is absolutely necessary to change the ignition lock. In this circumstance, in fact, it is possible to keep the only the Transponder of the MASTER key of the old set of keys, which, once inserted in the new key (see specific procedure) makes it possible to memorise the other keys provided with the new ignition lock.
  - changing the C.C.E.

MEMORISING

Before starting to programme the keys, it is necessary to check whether the system is brand new or if any keys have been memorised; this can be done by displaying the indications of the diagnosis warning light or connecting to the Alfa Tester. **The use of a faulty or already memorised C.C.E. would in fact involve the irreversible memorising of an incorrect code in the C.C.M. which it will no longer be possible to use in future on other cars.**

The memorising procedure is divided into two strictly consecutive phases:

1. Memorising the keys inside the C.C.E.
2. Memorising the MASTER CODE in the engine control system control unit (if brand new)
   This is carried out only when the first one has been carried out with a positive result, turning the key to MARCIA.

MEMORISING PROCEDURE WITH BRAND NEW SYSTEM

A Insert the **MASTER key** in the ignition lock
Turn the MASTER key to MARCIA and move it back to STOP as soon as the ALFA ROMEO CODE warning light goes off.

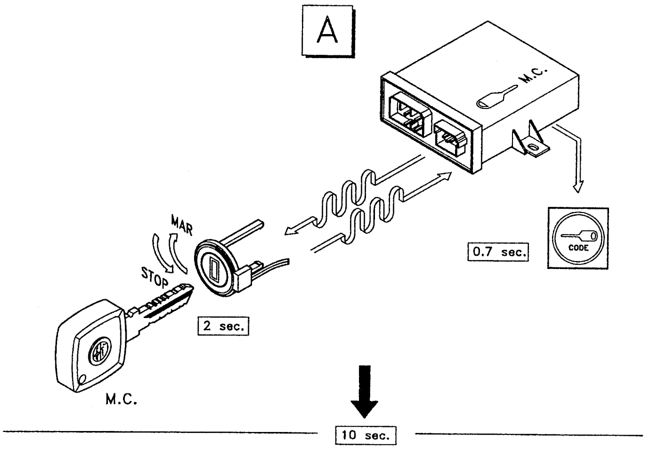

B Within 10 seconds:
Remove the MASTER key from the ignition lock, insert **a main key** in the lock
Turn the key to MARCIA. As soon as the ALFA ROMEO CODE warning light goes out, turn the key to the STOP position.

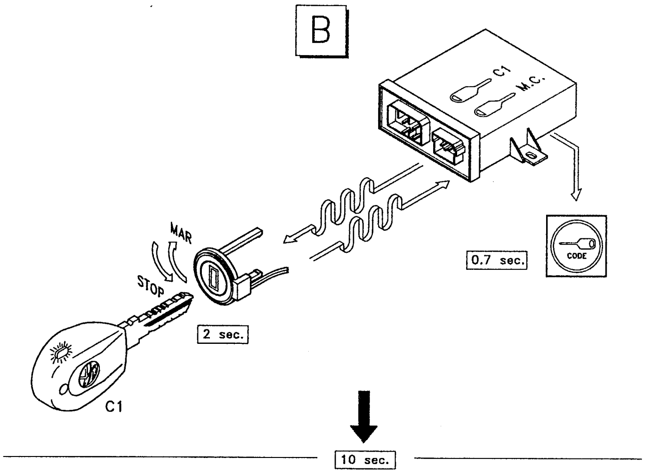

C Within 10 seconds:
Remove the key from the ignition lock, insert **a second main** key in the lock.
Turn the key to MARCIA. As soon as the ALFA ROMEO CODE warning light goes out, turn the key to the STOP position.

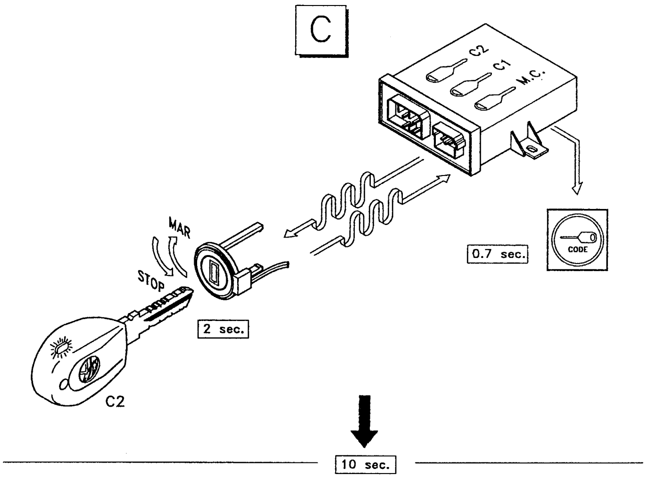

D Within 10 secondsi:
Remove the key from the ignition lock, insert **the MASTER key** in the ignition lock **again**
Turn the key to MARCIA. As soon as the ALFA ROMEO CODE warning light goes out, move it back to the STOP position.

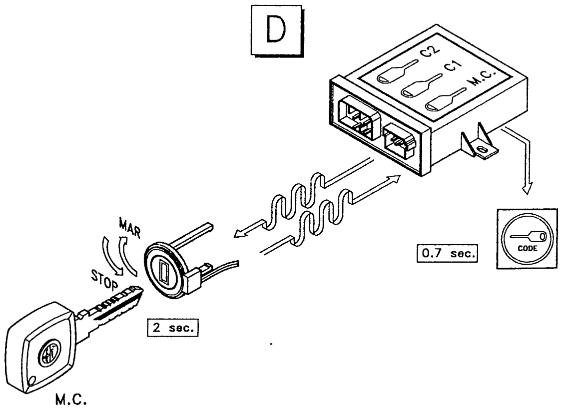

M.C. = MASTER CODE   C1, C2 = key codes

At this point the keys are memorised in the C.C.E.

E **Insert** any one of the memorised keys **and turn it to MARCIA**: the ALFA ROMEO CODE warning light will turn off and go out after 0.7 seconds. Wait for 2 seconds: if the ALFA ROMEO CODE warning light stays off, that means that the key memorising procedure has been carried out correctly, and the MASTER key code has been memorised in the injection control unit. Conversely, if the warning light flashes again (1.6 Hz), it means that the memorising procedure has not been carried out correctly.

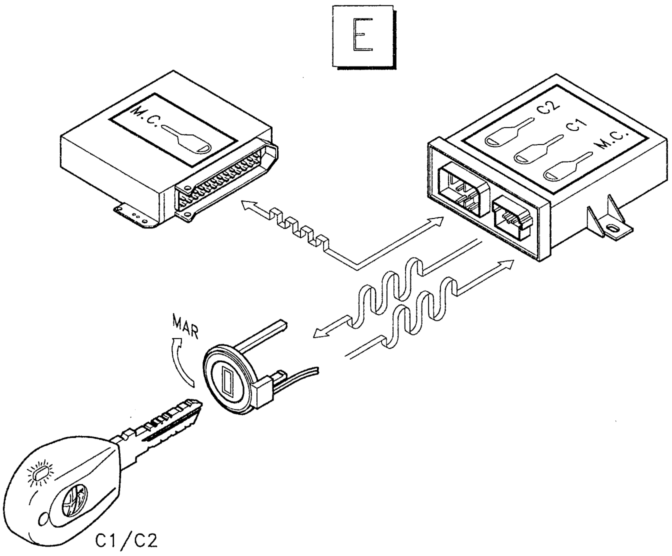

M.C. = MASTER CODE   C1, C2 = key codes

If, for any reason and in any moment, you think you have mistaken the procedure:

- **Move the key to MARCIA for more than 2 seconds or move the key to STOP for more than 10 seconds.**
- **Repeat the procedure from the start inserting all the keys.**

As may be deduced, during the procedure the key should never be kept at MARCIA for over 2 seconds, while it should never be kept at STOP for over 10 seconds.

Each time the key is turned to MARCIA, the warning light turns on (0.7 s), indicating the correct sequence of the procedure.

The above-mentioned procedure includes three keys: the MASTER key and two main keys.
Up to seven main keys may be inserted, using more keys between two insertions of the MASTER key.The MASTER key must always be inserted for the first and last time during programming.

The procedure is interrupted if the following situations occur:

- The same key is inserted twice consecutively
- The same key is inserted twice or more times between two insertions of the MASTER key
- A key stays at MARCIA for more than 2 seconds
- A key is kept at STOP (during the procedure) for more than 10 seconds

KEY RE-MEMORISING PROCEDURE

This procedure is similar to the previous one, and consists in inserting the main keys between two insertions of the MASTER Key.

During the sequence the new main keys and the old ones are inserted.

If the main keys memorised previously are not inserted, their code will be erased from the memory of the control unit.

A Insert the **MASTER key** in the ignition lock
Turn the MASTER key to MARCIA and move it back to STOP as soon as the ALFA ROMEO CODE warning light goes out.

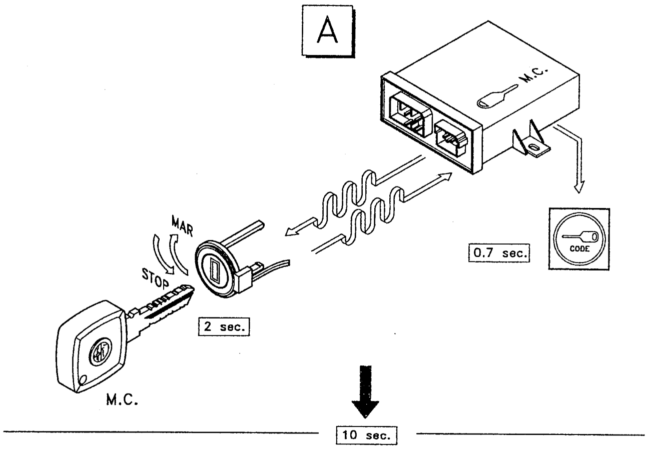

B Within 10 seconds:
Remove the MASTER key from the ignition lock, insert **a main key (known or new)** in the lock. Turn the key to MARCIA : when the ALFA ROMEO CODE warning light goes out, turn the key to the STOP position.

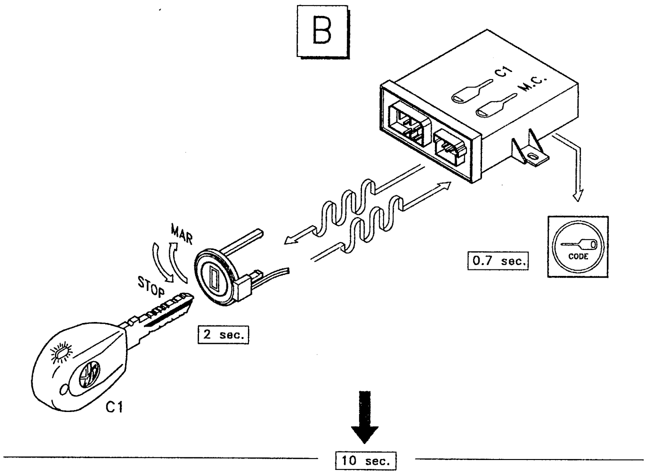

C Within 10 seconds:
Insert **a second main key (known or new)** in the ignition lock
Turn the key to MARCIA : when the ALFA ROMEO CODE warning light goes out, turn the key to the STOP position.

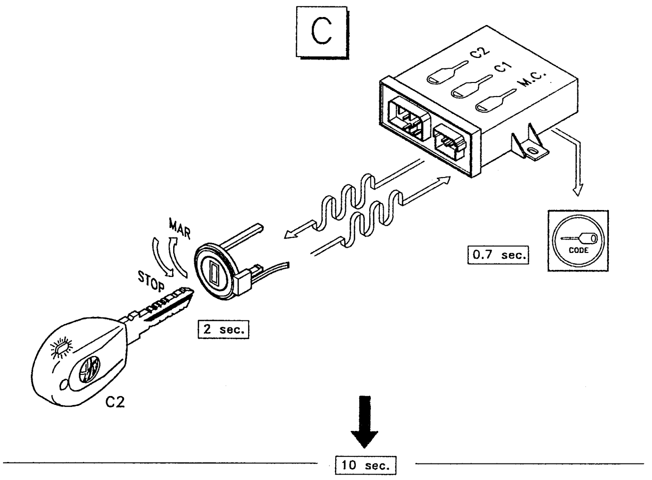

D Within 10 seconds:
Remove the key from the ignition lock, insert **the MASTER** key in the lock **again**
Turn the key to MARCIA and when the ALFA ROMEO CODE warning light goes out, move it back to the STOP position.

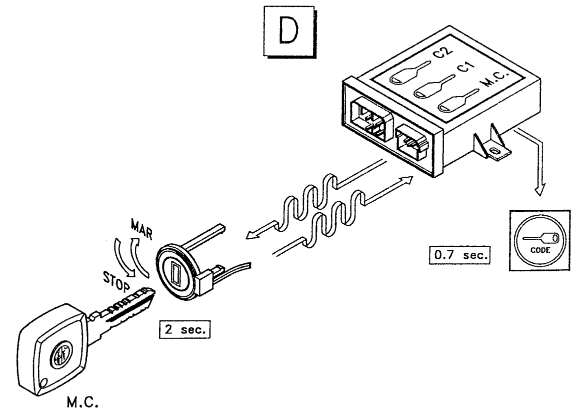

M.C. = MASTER CODE C1, C2 = key codes

If, for any reason and in any moment, you think you have mistaken the procedure:

- **Move the key to MARCIA for more than 2 seconds or move the key to STOP for more than 10 seconds.**
- **Repeat the procedure from the start inserting all the keys..**

As may be deduced, during the procedure the key should never be kept at MARCIA for over 2 seconds, while it should never be kept at STOP for over 10 seconds.

Each time the key is turned to MARCIA, the warning light turns on (0.7 s), indicating the correct sequence of the procedure.

The above-mentioned procedure includes three keys: the MASTER key and two main keys.
Up to seven main keys may be inserted, using more keys between two insertions of the MASTER key.The MASTER key must always be inserted for the first and last time during programming.

The procedure is interrupted if the following situations occur:

- The same key is inserted twice consecutively
- The same key is inserted twice or more times between two insertions of the MASTER key
- A key stays at MARCIA for more than 2 seconds
- A key is kept at STOP (during the procedure) for more than 10 seconds

Memorising the MASTER CODE in the C.C.M. (if the latter is changed:

This operation takes place turning the key to MARCIA after having memorised all the keys in the C.C.E.

Warning:

- **Once the codes have been programmed, the C.C.E. is capable of transferring the MASTER CODE to the injection control unit (which stores it permanently), each time the key is turned to MARCIA.**
- **Do not use brand new C.C.M.s to check that the system is working properly.**
- **Do not swop C.C.M.s among cars.**

Memorising with brand new C.C.E. and memorised C.C.M.:

This function is carried out following the normal memorising procedure, as if the whole system were brand new; the MASTER Key must be the same with which the injection control unit was memorised previously.

WARNINGS:

- **Before starting the procedure make sure that the C.C.E. is truly brand new. The use of a faulty or already memorised C.C.E. will cause the irreversible memorisation of a wrong code in the C.C.M., which will no longer be able to be used in future on other cars.**
- **WARNING:**
  If the ALFA ROMEO CODE warning light stays on during re- memorisation, it means that the procedure has not been carried out correctly and it has been interrupted.
  Repeat the re-memorising procedure from the start.
- **If the ALFA ROMEO CODE warning light stays on when the MASTER key has been inserted twice consecutively, this does not mean a malfunctioning, but that the re-memorising procedure has been opened (key at MARCIA) and interrupted (second key at MARCIA). To resume the correct operation of the warning light, move the key to STOP.**

TRANSPONDER TRANSFER PROCEDURE

When needing to change the ignition lock or a door lock, for example, it is possible to transfer the Transponder from MASTER key to another: this way the memory of the Electronic Key Control Unit (C.C.E.) can be "re-opened" to memorise the new main keys (with new locks). Otherwise it would be necessary to change both the C.C.E. and the Master Key Control Unit (C.C.M.) as it would be impossible to re-open the memory of the latter using another Transponder.

To transfer a Transponder, proceed as follows:

1. Open the MASTER key removing the mobile part.
2. Lift the other art, acting on the two notches. Operate carefully in order to avoid damages to the key.
3. Remove the Transponder taking care not to damage it.
3. Insert the Transponder in another MASTER key. N.B.: The Transponder rests in place in the key and is not restrained.

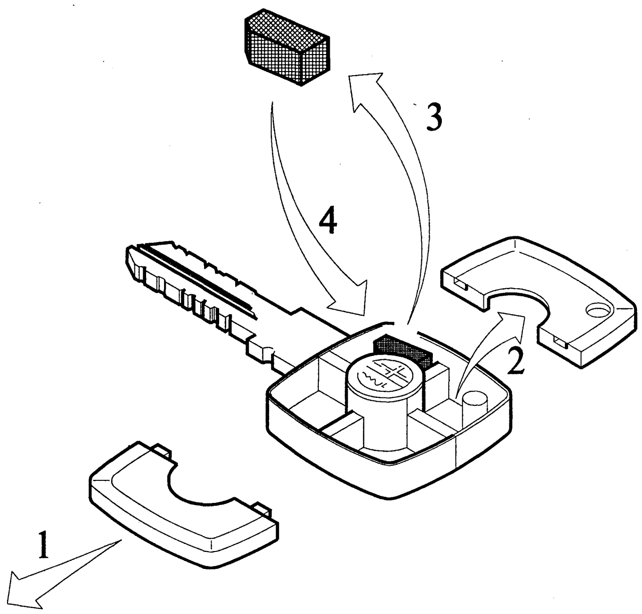

WIRING DIAGRAM (for ~~2.0 TS 16v up to chassis no.6023906)~~

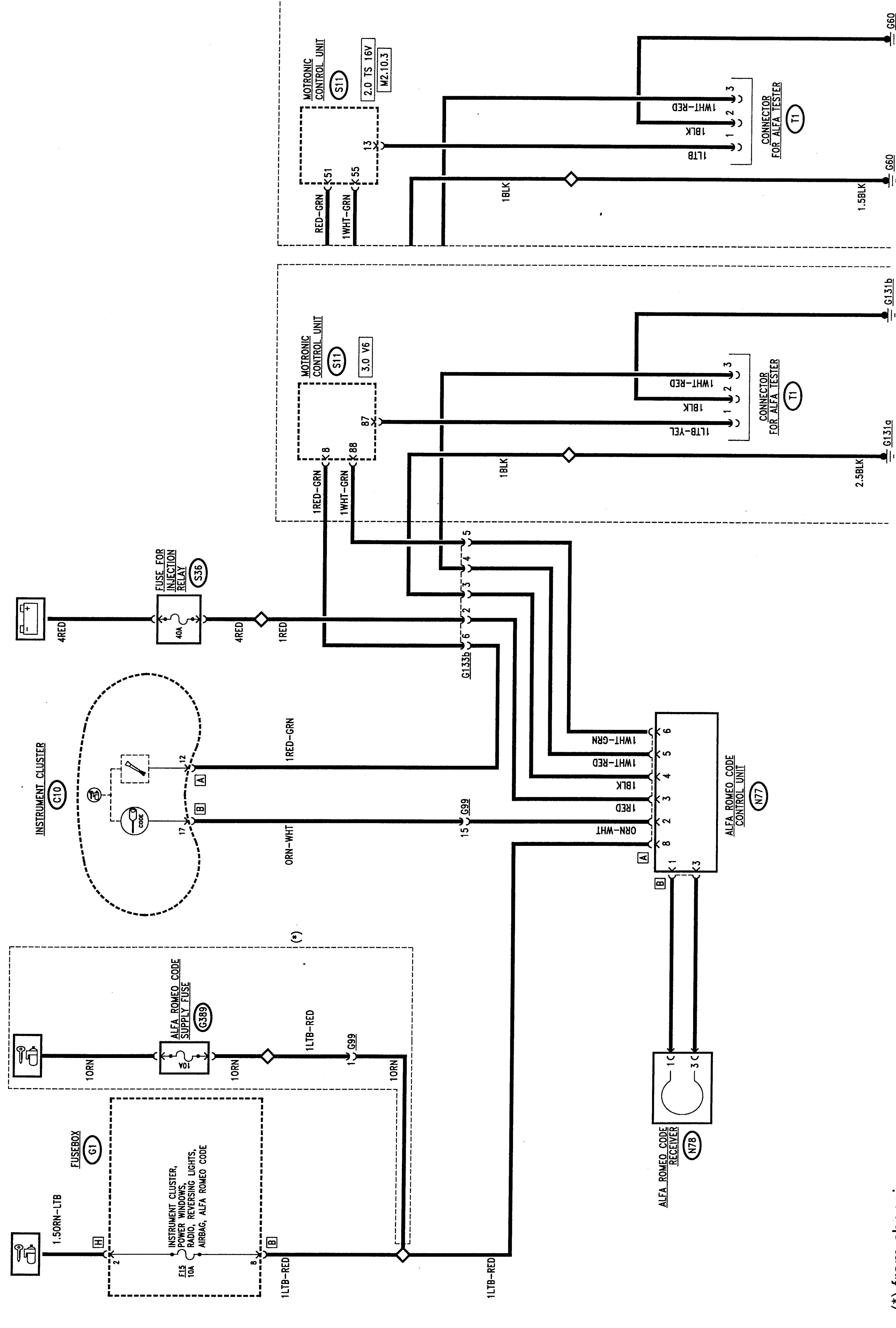

(*) from chassis no.___

WIRING DIAGRAM (for 2.0 TS 16v from chassis no.6023907)

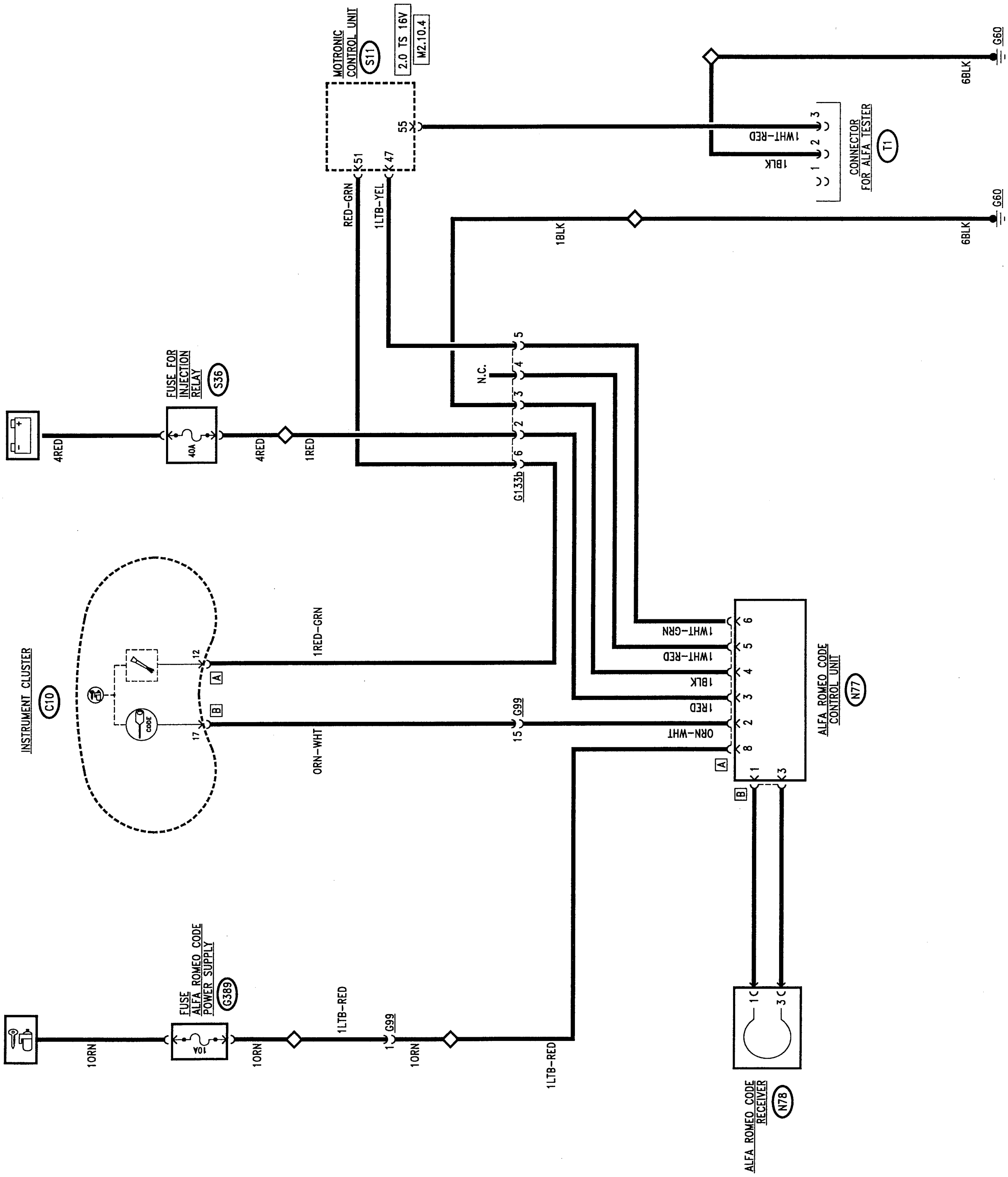

FUNCTIONAL DESCRIPTION

The ALFA ROMEO CODE control unit **N77**, to be found next to the fusebox **G1,** is connected via connector B to a special pair of cables to the receiver **N78**, consisting in a coaxial aerial with the ignition switch. Through connector A it is connected to the Motronic control unit **S11** and to the other systems: at pin 8 it receives the "key- operated" supply via the line of fuse **F15** of **G1** - up to chassis no.___ - and from wander fuse **G389** - from chassis no.___ - while at pin 3 it receives the direct supply via fuse **S36** of the Motronic system, and pin 4 is connected to earth.
The connection line with the ALFA ROMEO CODE warning light on the instrument panel leaves from pin 2.

Pins 5 and 6 manage communication between the ALFA ROMEO CODE control unit **N77** and the Motronic control unit **S11**: this communication takes place "cutting off" the diagnosis line K which leads from **S11** to the diagnosis connector **T1**.

Pins 5 and 6 manage communication between the ALFA ROMEO CODE control unit **N77** and the Motronic control unit **S11: for the 3.0 V6 and 2.0 TS 16v engine with MOTRONIC M2.10.3** injection this communication takes place "intercepting" diagnosis line K which leads from **S11** to the diagnosis connector **T1**.

For the 2.0 TS 16v engine with MOTRONIC M2.10.4 injection there is a direct connection line between the control unit **N77** (pin 6) and **S11** (pin 47).

LOCATION OF COMPONENTS

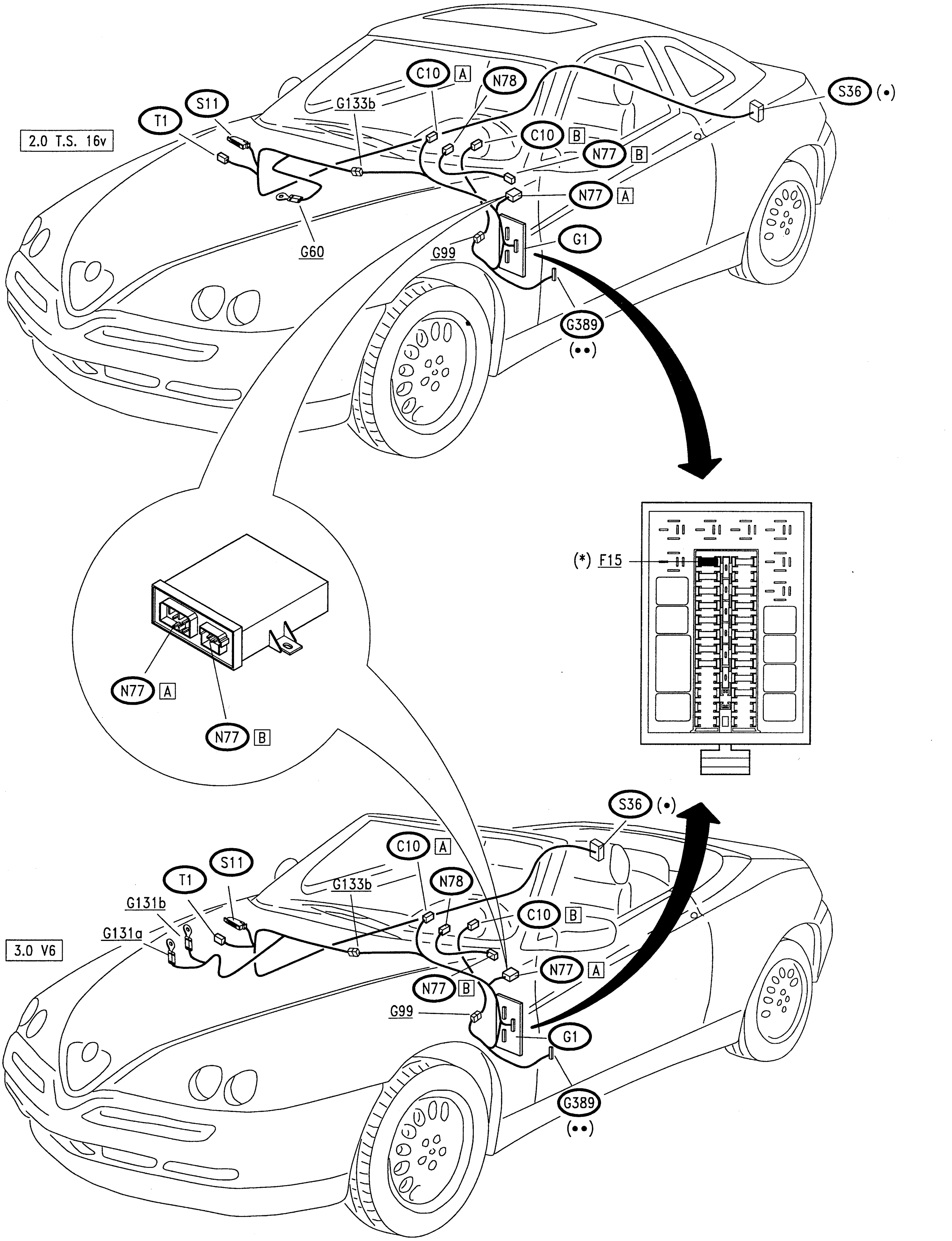

(•) Black fuseholder
(••) Red fuseholder

(*) Only up to chassis no.____

DIAGNOSIS

The C.C.E. cannot be tested directly via the Alfa Tester.

To the injection control unit, which already possesses a sophisticated self-diagnosis, the possibility has been added to test and display the more important functions of the ALFA ROMEO CODE.

Dialogue between the C.C.M. and the Alfa Tester begins when the key has been turned to MARCIA and when communication between the C.C.M. and the C.C.E. has ended.

The information, concerning the ALFA ROMEO CODE, supplied to the Alfa Tester, may belong to two different environments:

Errors:
generally displayed by the tester with priority depending on the importance.

There is a counter inside the control unit, which is activated when an error is stored and it decreases each time the error is no longer present; when the counter reaches zero, the control unit erases the error from the memory.

Therefore, the error memorised can be distinguished as PRESENT or not PRESENT.

The errors memorised are:

- Serial line not active, code not received or time-out: this error indicates that the control units (C.C.E. and C.C.M.) have not succeeded in communicating and the probable causes can be line interrupted or short circuited or some problem on the actual control units (or - with brand new system - faulty or disconnected aerial or faulty or lacking Transponder).
- Received incorrect code:
  the injection control unit has received from the C.C.E. a code that does not correspond to its memorised MASTER CODE; the probable cause can be an exchange of the injection control unit or the use of another main key during re-memorisation.
- Incorrect code in the C.C.E.:
  this means that a key unknown to the control unit has been inserted and starting of the car has not been allowed.

Parameters:

This is the environment of the Tester after connection with the C.C.M. (if no errors are present).

This environment is used to display the engineering parameters which define the status of a system.

The parameters are the following:

- brand new C.C.M.
- Starting inhibition procedure; (an un-memorised key has been inserted, the C.C.M. has not been enabled to start by the C.C.E.)
- brand new C.C.E. connected correctly

RECOVERY PROCEDURES

The emergency procedures should be carried out, when it is not possible to start the engine with the keys available.

This procedure requires the possession of the Code Card; with the corresponding ELECTRONIC CODE (5-figure code written on the card. The procedure, (carried out either with the Alfa Tester or with the accelerator pedal) consists in entering the ELECTRONIC CODE directly in the inection control unit.

This procedure makes it possible to start the engine only once; the procedure must be repeated to start the engine again (or a "known" key must be inserted, i.e. already memorised in the control unit).

Emergency starting procedure (using the accelerator pedal)

This procedure should be carried out using the accelerator pedal and carefully watching the indications of the injection control unit warning light.

- Turn the key to MARCIA
- Press the accelerator pedal and keep it pressed until the warning light goes out.
- When the warning light goes out release the accelerator pedal.
- At this point the warning light begins to flash; after the number of flashes corresponding to the first number of the code on the Code Card (ELECTRONIC CODE) depress the accelerator pedal completely.
- The warning light turns on and stays on for 4 seconds then it goes out.
- When the warning light goes out, release the accelerator pedal
- The warning light starts to flash again; after the number of flashes corresponding to the second number of the ELECTRONIC CODE, press the accelerator fully home again.
- Proceed in the same way for the other numbers of the ELECTRONIC CODE.
- Also after the last number, keep the accelerator pressed until the warning light goes out (appr. 4 seconds)
- Release the accelerator pedal.

If the warning light flashes quickly, it means that the operation has been carried out correctly, thus the car can be started: if the warning light stays on, the code has not been entered correctly, move the key to STOP and back to MARCIA again, and repeat the procedure.

EXAMPLE: ELECTRONIC CODE = "42173"

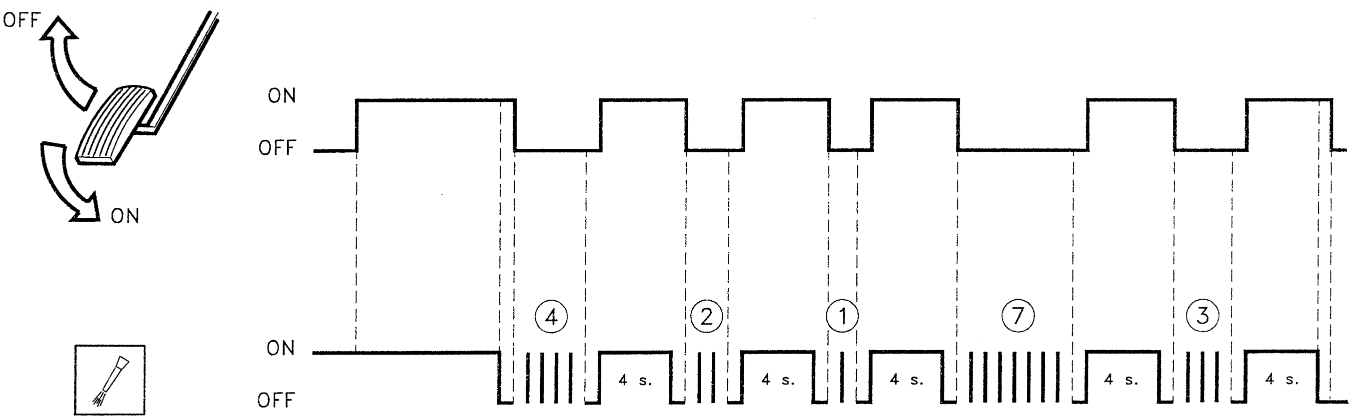

NOTE : If this procedure is not activated correctly, check the throttle potentiometer and the corresponding wiring, and also the throttle itself (throttle stroke without obstacles or sticking); also check the supply to the C.C.M..

CONTROL SYSTEM -
2.0 T.SPARK 16v Engine:
BOSCH MOTRONIC M2.10.3

INDEX

WARNING
Up to chassis no.6023906

WIRING DIAGRAM A

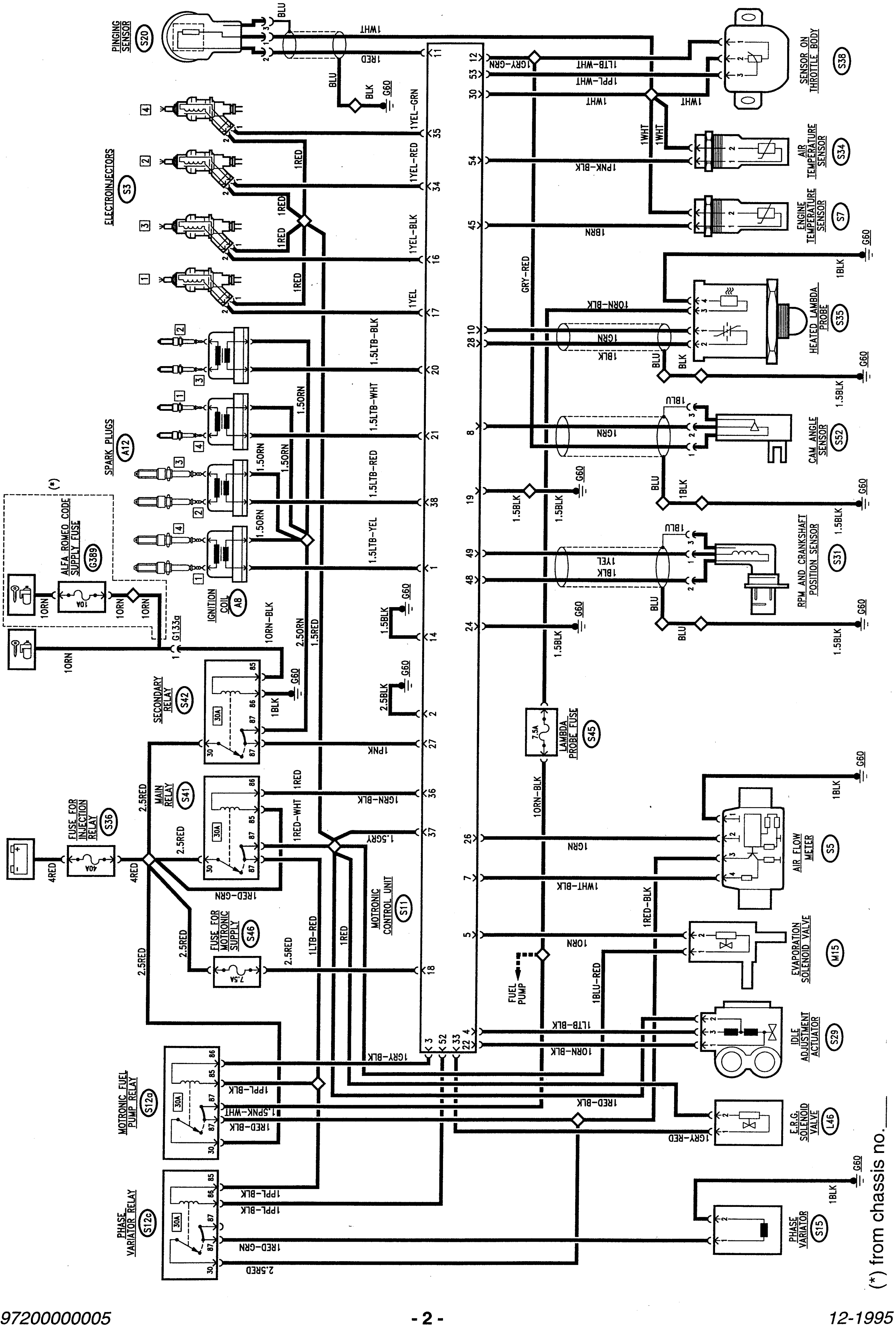

(*) from chassis no.____

WIRING DIAGRAM B

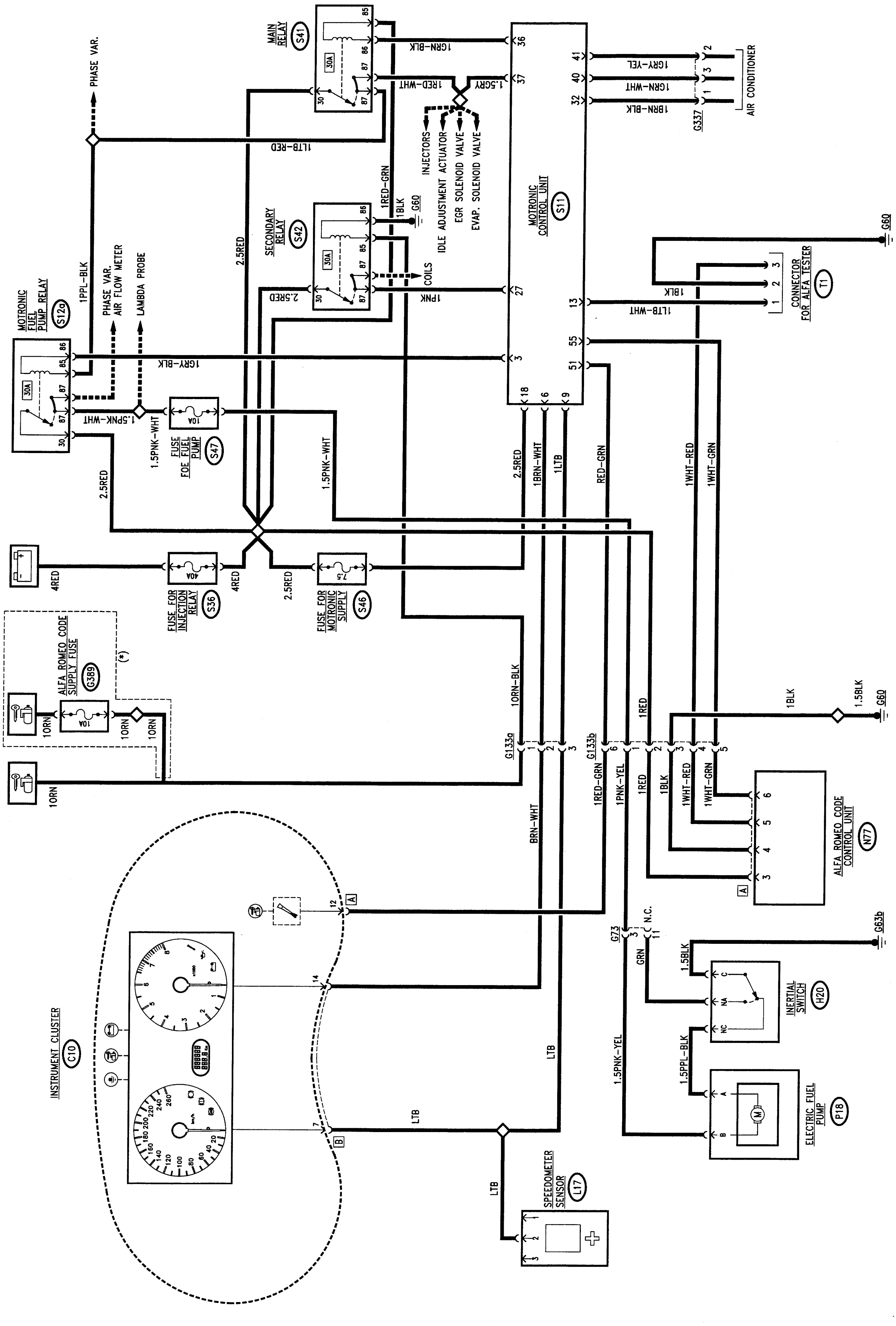

(*) from chassis no.____

GENERAL DESCRIPTION

An electronic control system supervises and regulates all the parameters of the engine, optimising performance and consumption levels through response in real time to the different operating conditions: this sophisticated latest generation system consists of a single control unit which controls both ignition (static with lost spark) and injection (timed).

This is the M 2.10.3 version of the proven and reliable BOSCH MOTRONIC system.

Compared with the previous versions this new M 2.10.3 system adopts a control unit - with 55 pins - with advanced design and production technology, it also possesses many possibilities for inserting auxiliary functions.

As a result of the use of new sensors and revision of the control programmes, the system makes it possible to achieve considerable improvements in terms of consumption and emission levels and vehicle handling.

Another feature of this system is self-adaptation, i.e. the capability to recognise the changes that take place in the engine and to compensate them, according to functions which mainly correct:

- the mixture titration
- the caburetion parameters according to the command of the evaporative solenoid valve
- an adaptive programme for idle speed control.

FUNCTIONS OF THE SYSTEM

Sequential and timed injection (S.E.F.I.)

With this control unit, fuel injection is sequential and timed for each cylinder: the injection instant (delivery of fuel into the intake manifolds by the opening of the injectors) is not simultaneous for all the cylinders, but takes place for each cylinder in correspondence with the optimal point of injection, calculated by the control unit according to special maps depending on the load, speed and temperature of the engine.

NOTE: the instant considered in the design of the maps is that of the start of injection (the cylinder is in the exhaust stroke - intake valve still closed).

Static ignition

An electronic ignition system has been adopted with "static distribution" (with semi-conductors, without distributor). This solution makes it possible to eliminate rotary components; in addition, it does not produce external sparks thus reducing the risk of interferences; lastly it reduces the number of high voltage cables and connectors; as the power modules for controlling the primary windings of the coil are inside the control unit.

Static ignition takes place through four coils, according to the so-called "lost spark" logic: this solution exploits the different pressures and environments existing contemporaneously in a pair of cylinders: when one of the cylinders approaches the bursting stroke, with a mixture of air and fuel, the corresponding cylinder is at the end of the exhaust stroke in the presence of exhaust gas.

In a 4-cylinder in line engine, the paired cylinders are 1/4 and 2/3.

The solution adopted for this engine (T.SPARK and 16 valves) has required the adoption of a larger "central" spark plug and a smaller "side" spark plug.

Two of the four coils supply the small spark plugs and the other wto supply the large ones simultaneously the large one of the paired cylinder.

NOTE:
This way it is impossible to invert the spark plug cables during servicing operations.

Metering the air flow rate

The air flow meter adopted is of a more modern design known as the "hot film" type.

Outside, the air-flow meter looks like a part of duct between the intake manifold and the air cleaner.

Inside the air-flow meter there is an electronic circuit and a plate that is crossed by the air which passes into the duct. The film plate is kept at a constant temperature (appr. 120°C over the temperature of the incoming air) by a heating resistance placed in contact with it.

The mass of air flowing through the manifold tends to withdraw heat from the plate: therefore, to keep its temperature constant, a certain current needs to flow through the heating resistance: this current, suitably measured, is proportionate with the mass of flowing air.

N.B. This air flow meter measures directly the mass of air (and not the volume as in the previous versions with "floating port", thereby eliminating problems of temperature, altitude, pressure, etc.)

Cylinder detection

Following the sequential and timed injection system, a timing sensor has been introduced (cam angle sensor): this makes it possible to detect which cylinder is in the bursting stroke when the engine is started, in order to be able to start the correct injection sequence. The sensor is formed of a Hall-effect device by which the voltage signal sent to the control unit "lowers" suddenly when the tooth machined on the camshaft pulley passes in front of the actual sensor; therefore a signal is sent every two turns of the crankshaft.

Conversely, the rpm sensor sends a reference signal for each turn of the engine and each subsequent tooth of the phonic wheel informs the control unit of an increase of the angular position of the crankshaft, so that injection is sent correctly to the suitable cylinder and the spark to the corresponding pair of cylinders.

Fuel pump

The complex control logic of the fuel pump carried out by the control unit (mainly based on the rpm signal) immediately cuts off the supply to the pump as soon as the engine stops.
Moreover, the pump will not operate with the key engaged and the engine not running.

In this car, this logic is integrated - in order to further higher the standards of safety - by the **inertial switch** device: this is an electromechanical switch which, in the event of heavy shocks, opens to cut off the circuit that takes the earth to the fuel pump, which stops instantaneously. This device is particularly important as an integration of the safety guaranteed by the logic of the control unit, especially if the car is hit from behind or in the case of other accidents in which the engine does not stop immediately.

Timing variator

This T.SPARK 16 valve engine is fitted with an electromechanical-hydraulic timing variator which is connected to the camshaft and controls and adjusts intake timing (advance) in such a way that a larger amount of air is taken in. This device is activated by the control unit only after exceeding a determinate rpm and engine load to avoid adversely affecting correct operation of the engine at low speeds.

Percentage of exhaust gas recirculation

Nox (nitric oxide) is developed at high temperatures in the combustion chambers.
To reduce these emissions an E.G.R. (Exhaust Gas Recirculation) system is adopted which by recirculating part of the exhaust gases, lowers the temperature, thus the Nox produced, in the combustion chambers. In fact, part of the exhaust gas is withdrawn through the special EGR Valve and re-admitted to the intake box where it is mixed with the intaken air and burnt again in the engine. The EGR valve is modulated by a solenoid valve controlled by the injection control unit and, as a result of the type of control, in addition to reducing the amount of Nox, consumption levels are also reduced.

The percentage of exhaust gas to be returned to the engine is established by the control unit taking account of a specific characteristic curve which depends on the load, speed and temperature of the engine.

OPERATING LOGIC

– Identification of the "operating point":

the "point of operation of the engine" is located mainly through two sensors: the rpm sensor informs the control unit of the speed of rotation of the engine; the air flow meter supplies the value of the mass of air actually entering the cylinders, defining the instantaneous volumetric yield of the engine.

– Adjustment of injection times (quantity of fuel):

the control unit controls the injectors very quickly and precisely, calculating the opening time on the basis of engine load (rpm and air flow), also taking into account the battery voltage and the temperature of the engine. Injection is "sequential", i.e. the injectors are opened in correspondence of the exhaust stroke of the corresponding cylinder.

– Ignition adjustment (calculation of advances):

the control unit calculates the advance on the basis of the engine load (rpm and air flow); the value is also corrected according to the temperature of the intaken air and that of the engine: ignition is "static" as described previously.

– Cold starting control:

during cold starts the control unit uses special advance values and injection times.
When a determinate temperature/rpm ratio is reached, the control unit resumes normal operating conditions.

– Control of enrichment during acceleration:

upon the need for acceleration, the control unit increases injection in order to reach the required load as quickly as possible.
This function takes place through the potentiometer located on the throttle which instantaneously informs the control unit of the need to accelerate.

– Fuel cut-off during deceleration:

with the throttle closed and an engine speed above a certain threshold, the control unit de-activates fuel injection; this way the rpms decrease rapidly towards idle speed reducing the speed and fuel consumption. The cut-off threshold value varies according to the temperature of the engine and the speed of the car.

– Control of idle speed:

the adjustment of the engine idle speed is carried out through the special actuator fitted directly on the throttle body which acts on the throttle by-pass: in fact, when the throttle is closed, this valve adjusts the by-pass gap compensating the load required by the services in order to ensure that idle speed is as constant as possible.

– **Maximum Rpm limiting:**

above a certain threshold the control unit automatically stops the injection of fuel preventing the engine from "over-revving".

– **Combustion control -lambda probe-:**

the oxygen sensor (or "lambda" probe) informs the control unit of the amount of oxygen at the exhaust, and therefore the correct air-fuel metering.

The optimum mixture is obtained when the lambda coefficient = 1 (optimum stoichiometric mixture). The electric signal sent by the probe to the control unit changes abruptly when the composition of the mixture departs from lambda = 1. When the mixture is "lean" the control unit increases the amount of fuel, reducing it when the mixture is "rich": this way the engine operates as far as possible around the ideal lambda rating.
The signal from the lambda probe is processed inside the control unit by a special integrator which prevents sudden "oscillations".
The probe is heated by an electrical resistance so that it quickly reaches the correct operating temperature (appr. 300 °C).
Through this probe it is therefore possible to adjust engine carburetion precisely. Among other items, this makes it possible to meet emission limit regulations.

– **Timing variator control:**

The electro-mechanical-hydraulic timing variator, connected to the camshaft, controls and adjusts the intake timing according to the load and rpm of the engine. This device is activated by the control unit at higher engine operating speeds (above 1,600 rpm and with load above 30%).

– **Knocking control:**

Through a knock sensor the control unit is informed if any pinging or "knocking" occurs and it corrects the spark advance "delaying" it accordingly; a further correction also takes account of the air temperature, in fact, when the temperature of the intake air is high, pinging is more accentuated.

N.B. The intaken air temperature sensor to be found just downstream of the air-flow meter, is not used to calculate the engine load but to control the knocking parameters.

– **Fuel vapour recovery:**

the fuel vapours collected from the various points of the supply circuit in a special active carbon canister are ducted to the engine where they are burnt: this takes place through a solenoid valve which is opened by the control unit only when the engine is in a condition that allows correct combustion without adversely affecting the operation of the engine: in fact the control unit compensates this amount of fuel by reducing delivery to the injectors.

– **E.G.R. valve control**

The percentage of exhaust gas to be returned to the engine is determined by the control unit taking account of a specific characteristic curve which depends on the engine load and speed: recirculation is only activated when the engine speed is between 2500 and 4000 rpm., also in relation to the temperature of the engine (higher recirculation percentage with high temperatures).

– **Connection with the air conditioner compressor:**

the control unit is connected with the air conditioner compressor and it cuts in the compressor in relation to operation of the engine. As this service absorbs a considerable amount of power, the control unit:

- adapts the engine idle speed each time the compressor cuts in; if the engine speed falls below 700 rpm, the compressor is turned off;
- when there is the need for high power - high speed - over 6000 rpm, it momentaneously cuts out the compressor
- when the engine is being started the compressor is disabled until normal operating conditions have been reached.

– **Connection with ALFA ROMEO CODE system:**

on cars fitted with the ALFA ROMEO CODE system, as soon as the Motronic control unit receives the signal that the key has been turned to MARCIA, it "asks" the above-mentioned system for consent to start the engine: this consent is given only if the ALFRA ROMEO CODE control unit recognizes the code of the key engaged in the ignition switch as correct. This dialogue between the two control units takes place on diagnosis line K already used for the Alfa Romeo Tester.

– **Self-diagnosis:**

the control unit possesses a **self-diagnosis system**, which continuously monitors the plausibility of the signals from the various sensors and compares them with the limits allowed: if these limits are exceeded, the system detects a fault and turns on the corresponding warning light on the instrument cluster.

The warning light turns on when the engine is started to indicate the initial test of the entire system (appr. 4 seconds), it then turns off if no errors have been memorised: otherwise it stays on.

For certain parameters, the control unit replaces the abnormal values with suitable ones so that the car can "limp" to a point of the Service Network.
These "recovery" values depend on the other correct signals and they are defined individually by the control unit operating logic.

The self-diagnosis system also enables quick and effective location of faults connecting with the ALFA

ROMEO Tester (see "Fault-finding"), through which all the errors memorised can be displayed. It is also possible to check the operating parameters recorded by the control unit and operate the single actuators to check whether they are working properly.

COMPONENTS

The electronic control unit receives the signals leading from the **sensors** which measure the engine operating parameters. It processes them according to a logic stored inside in "maps" which correlate the different parameters in the best way possible and it operates the **actuators** accordingly so that the engine always works with the highest level of regularity and yield.

The sensors are the following:

- engine temperature sensor (**S7**);
- air temperature sensor (**S34**);
- sensor on throttle body (**S38**);
- rpm sensor (**S31**);
- cam angle sensor (**S52**);
- heated lambda sensor (**S35**)
- air-flow meter (**S5**);
- knock sensor (**S20**);

The actuators are the following:

- electroinjectors (**S3**);
- ignition coils (**A8**);
- fuel pump (**P18**);
- idle adjustment actuator (**S29**);
- vapour recovery solenoid valve (**M15**) ;
- E.G.R. solenoid valve (**L46**);
- timing variator (**S15**).

The control unit is also connected with:

- the climate control unit;
- the ALFA ROMEO CODE control unit (**N77**);
- the instrument cluster (**C10**) to which it supplies the signal for turning on the diagnosis warning light and for the rev counter,
- the tachometric sensor (**L17**) from which it receives the car speed signal.

The system is completed by five relays: the first three - the main relay (**S41**), secondary relay **S42** and the fuel pump relay **S12a** operate the fuel pump, the injectors, the coils and the other components of the system, while the fourth - the air-flow meter relay (**S12e**) and the fifth - the timing variator relay (**S12c**) supply the corresponding components.

The supply line for the entire system is protected by fuse **S36**, while the control unit is protected by wander fuse (**S46**); other special fuses protect the pump (**S47**), and the lambda probe resistance (**S45**).
Lastly, there is an earth point (**G60**) on the engine.
Connector **T1** enables connection with the ALFA ROMEO Tester: this is located inside the car next to the control unit.

FUNCTIONAL DESCRIPTION

The Motronic control unit **S11** controls and adjusts the entire electronic ignition and injection system; all the system supplies are protected by fuse **S36** (40A).

The control unit is supplied at pin 18 directly by the battery through fuse **S46** (7.5A). At pin 37 it receives the supply from the main relay **S41**, while at pin 27 it receives the "key- operated" supply from the secondary relay **S42**.

Pins 2, 14, 19 and 24 are earthed and serve as reference respectively for the ignition, the injectors, electronic screening and the final power stages.

Two relays control the entire system:

The main relay **S41**, acts as supply relay for the whole system; it is energized by a control signal - earth - leading from pin 36 of the control unit and consequently sends the supply (12V) to pin 37 of the control unit itself, to the fuel pump relay **S12a**, to the timing variator relay **S12c**, to the vapour recovery solenoid valve **M15**, to the idle speed actuator **S29**, to the EGR solenoid valve **L46** and lastly to the injectors **S3**.

The secondary relay **S42**, energized by the "key-operated" - from chassis no.___ via wander fuse **G389** supply, supplies the control unit at pin 27 and the primary windings of the coils **A8**.

The fuel pump relay **S12a**, supplied by the main relay **S41**, is energized by a control signal - earth - leading from pin 3 of the control unit **S11**. Consequently, the relay supplies the resistance of the lambda probe **S35**, that of the timing variator **S12c** and of course the fuel pump **P18**; this supply line is protected by a special fuse **S47** (10A).

The earth reaches the pump **P18** via the inertial switch **H20** which cuts off the circuit in the event of impact.

The control unit **S11** receives numerous signals from the different sensors, thereby keeping all the engine operating parameters under control.

Through a frequency signal sent to pins 48 and 49 of the control unit, the rpm sensor **S31** supplies information about the engine rpm; the two above-mentioned signals are very low in intensity and are therefore suitably screened.

The sensor is inductive and detects the number of revolutions of the engine through the change in a magnetic field produced by the passage of the teeth of a "phonic" wheel (60-2 teeth) fitted on the crankshaft.

The cam angle sensor **S52** (timing sensor), supplied at 5 V by pin 12 of the control unit, and sends a signal in frequency corresponding to the phase to pin 8 of the control unit itself; these two signals are very low in intensity and are therefore suitably screened.
The sensor comprises a Hall effect device due to which the voltage signal sent to the control unit "lowers" abruptly when the hollow machined on the camshaft passes in front of the sensor.

The heated lambda sensor **S35** supplies the control unit information about the correct composition of the air-fuel mixture detecting the concentration of oxygen in the exhaust gas; this takes place through the signal sent to pin 10 of the control unit, while pin 28 supplies the reference earth; these two signals are very low in intensity and are therefore suitably screened.
The sensor is heated by a resistance to make sure that it operates correctly also when the engine is cold; the resistance is supplied by the fuel pump relay **S12a** and it is protected by a specific fuse **S45** (7.5A).

The throttle body sensor **S38**, is supplied by the control unit from pins 12 and 30 and through a potentiometer it sends a signal to pin 53 which is proportionate with the degree of opening of the throttle itself.

The engine temperature sensor **S7**, connected to the electronic earth at pin 30, supplies a signal to pin 45 proportionate with the temperature of the engine coolant, detected with an NTC material (resistance that lowers with the temperature).

The intaken air temperature sensor **S34**, connected to the electronic earth at pin 30, supplies a signal at pin 54 that is proportionate with the temperature of the air entering the intake box, detected with an NTC material (resistance that lowers with the temperature).

The knock sensor **S20**, through a frequency signal sent to pin 11 of the control unit, supplies information about the knocking conditions, while an electronic earth leads from pin 30; these two signals are very low in intensity and are therefore suitably screened.

The sensor comprises a piezoelectric plate which detects the vibrations produced when the engine is running, exploiting a particular characteristic of piezoelectric materials which generate an output voltage when subjected to mechanical stresses; this voltage is filtered and analysed by the control unit which corrects the ignition parameters accordingly.

The air flow meter **S5**, is supplied by the special relay **S12a**: from pin 26 of the control unit it receives the reference earth, while it sends a signal proportionate with the air flow to pin 7.

The air flow meter is of the "heated film" type: a diaphragm is interposed in a measurement channel, through which the intake air flows: this diaphragm is kept at a constant temperature by a heating resistance; the mass of air that crosses the measurement channel tends to withdraw heat from the diaphragm, therefore, in order to maintain its temperature constant, a certain amount of current must flow through the resistance: this current, appropriately measured, is proportionate with the mass of air flowing in the channel.

On the basis of the signals received from the sensors and of the calculations carried out, the control unit **S11** controls the opening of the single injectors **S3** through special signals - of the duty-cycle type - pins 17 (cyl. 1), 34 (cyl. 2), 16 (cyl. 3) and 35 (cyl. 4). The injectors receive consent (12V) to open from the main relay **S41**.

The static ignition system is controlled by the control unit directly which automatically adjusts the advance.
N.B. the power modules which generate the high voltage pulses are located inside the control unit. The control signals (earth) for the primary windings of the coils **A8** lead from the control unit, while the secondary winding sends the pulse to the spark plugs **A12**: from pins 1 and 21 for cylinders 1- 4 and from pins 28 and 30 for cylinders 2-3.
The primary windings of the coils **A8** are supplied at 12 V ("key-operated") by relay **S42**.

The power modules inside the control unit are connected to earth via pin 2.

The idle speed adjustment actuator **S29** forms a bypass line for the flow of air; this comprises two windings: one opens and the other closes a valve that adjusts the gap of the by- pass section; it is controlled by the control unit through the duty-cycle signals of pins 22 (closing) and 4 (opening).

The vapour recovery solenoid valve **M15** allows the passage of the fuel vapours towards the engine intake where they are added to the mixture entering the combustion chamber; this valve, supplied by the main relay **S41**, is opened by the control unit when the engine is under load through a duty cycle signal from pin 5.

The E.G.R. solenoid valve **L46**, controlled by the control unit, operates the actual E.G.R. valve modulating its opening: the latter is a vacuum-operated diaphragm valve: the electropneumatic valve works by changing this vacuum which is withdrawn from the same "takeoff" used for the servobrake.

The solenoid valve is controlled from pin 33 of the control unit while it is supplied at 12 V by main relay **S41**.

The timing variator **S15** mechanically controls timing advance at the intake; it is operated by the corresponding relay **S12c**: this relay is supplied by relays **S12a** and **S41** and it is energized via a negative signal from the control unit (pin 52), thus supplying the timing variator **S15**: this signal operates the actuator which controls the flow of oil in the hydraulic unit of the device that adjusts camshaft rotation.

variator **S15**: this signal operates the actuator which controls the flow of oil in the hydraulic unit of the device that adjusts camshaft rotation.

The tachometric signal (car speed) reaches the control unit at pin 9 via sensor **L17**; while from pin 6 the control unit sends a "pulse" signal to the cluster which is proportionate with the number of revolutions of the engine; the signal for the "Check Engine" warning light on the cluster **C10** leads from pin 51.

The control unit **S11** is connected with the air conditioning system through pins 32, 40 and 41.
This makes it possible to adapt the engine idle speed to the increased power each time the compressor cuts in, or to cut it out in the case of high speed or engine loads. For further details see the "Climate control" section.

The control unit **S11** is connected by pin 55 with the ALFA ROMEO CODE control unit **N77** via the diagnosis line K; if the ALFA ROMEO CODE system does not recognise a correct "key code" it will not enable the Motronic control unit to start the engine.

The control unit possesses a self-diagnosis system which can be used through connection to the ALFA ROMEO Tester at connector **T1**; the tester receives the fault signals from the control unit through the diagnosis lines L - pin 13 -and K - pin 55 -, while the earth leads from **G60** (line K is also used by the ALFA ROMEO CODE control unit).

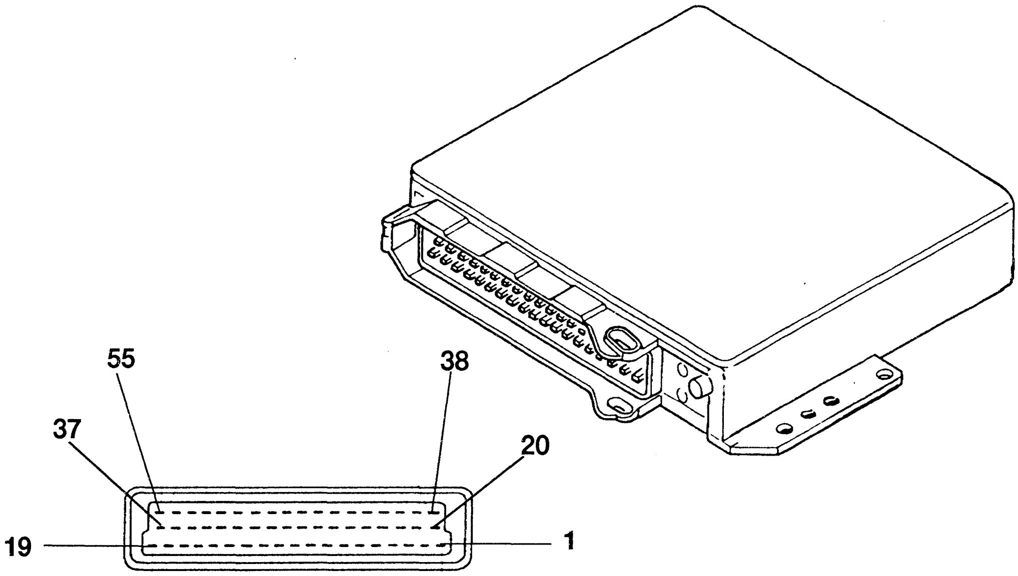

CONTROL UNIT PIN-OUTS

1. Ignition coil control - cyl. 1 and 4 -
2. Earth for ignition
3. Fuel pump relay control
4. Idle actuator control - opening
5. Evaporative solenoid valve control
6. Rev counter signal
7. Air flow meter signal
8. Timing signal
9. Car speed signal
10. Lambda probe signal
11. Knock sensor signal
12. Stabilized voltage (5V) for sensors
13. Diagnosis line L
14. Earth for injectors
15. N.C.
16. Cyl. 3 injector
17. Cyl. 1 injector
18. Direct supply
19. Electronic screening earth
20. Ignition coil control - cyl. 3 and 2
21. Ignition coil control - cyl. 4 and 1
22. Idle speed actuator control - closing
23. N.C.
24. Earth for final stages
25. N.C.
26. Air-flow meter earth
27. "Key-operated" supply, from secondary relay
28. Lambda probe earth
29. N.C.
30. Electronic earth for sensors
31. N.C.
32. Conditioner compressor relay control
33. E.G.R. solenoid valve control
34. Injector cyl. 2
35. Injector cyl. 4
36. Main relay control
37. Supply from main relay
38. Cyl. 2 and 3 ignition coil control
39. N.C.
40. Conditioning system control
41. Compressor cut-in request
42. N.C.
43. N.C.
44. N.C.
45. Engine temperature signal
46. N.C.
47. N.C.
48. Signal for rpm sensor
49. Rpm sensor signal
50. N.C.
51. "Check Engine" warning light
52. Timing variator control
53. Throttle position signal
54. Intaken air temperature signal
55. Diagnosis line K (also for ALFA ROMEO CODE)

LOCATION OF COMPONENTS

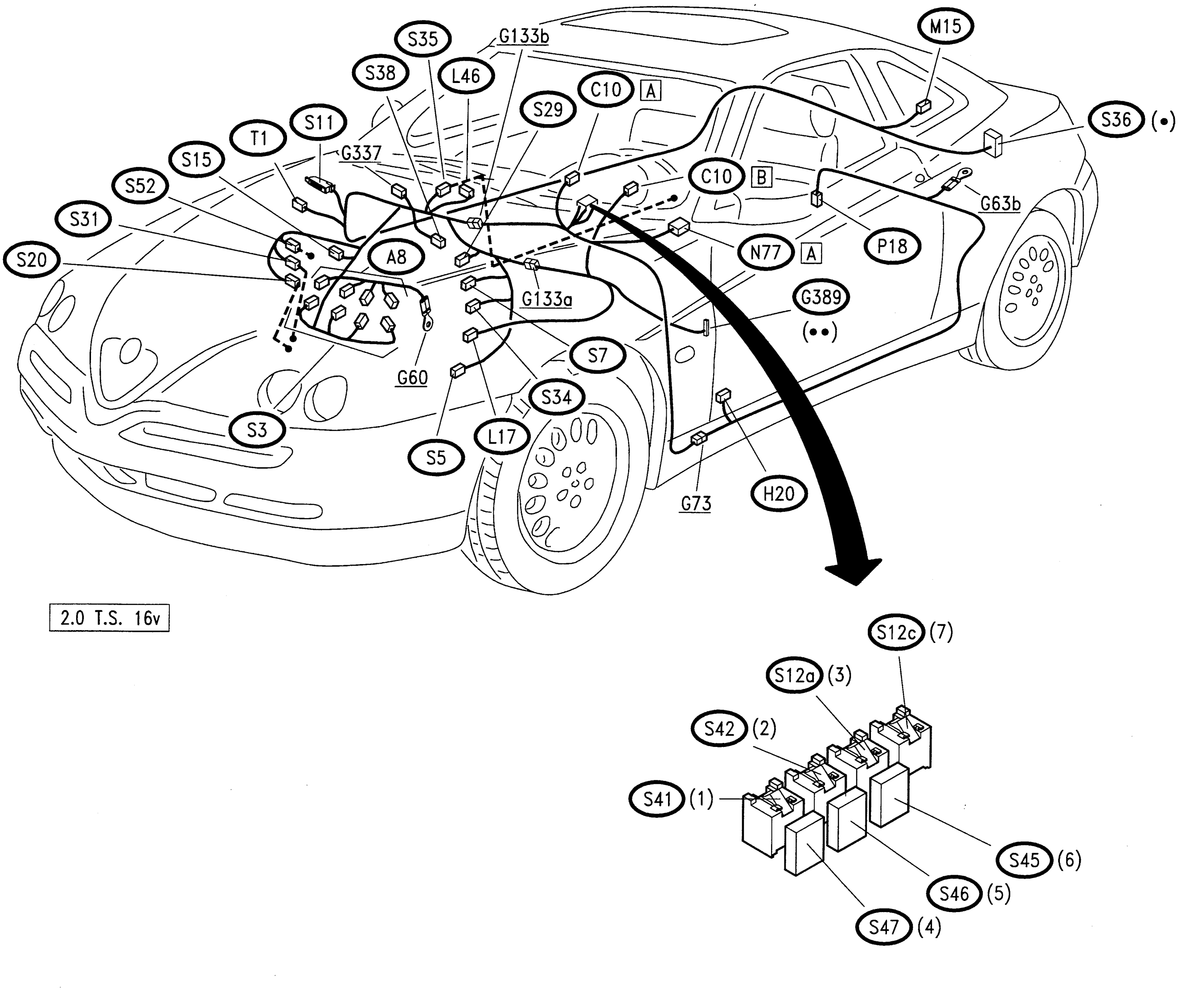

(•) Black fuseholder
(••) Red fuseholder
(1) Black base
(2) Black base
(3) Black base
(4) Red fuseholder
(5) Brown fuseholder
(6) Brown fuseholder
(7) Black base

CHECKING COMPONENTS

Rpm sensor S31

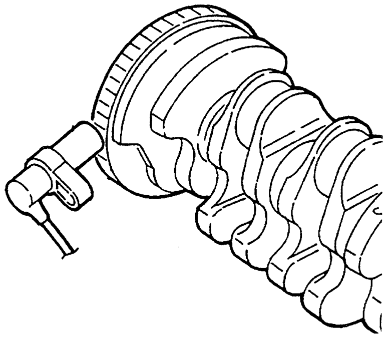

SPECIFICATIONS	
Sensor winding resistance 20 °C	486 ÷ 594 Ω
Gap between sensor and phonic wheel	0.5 ÷ 1.5 mm

Engine temperature sensor S7

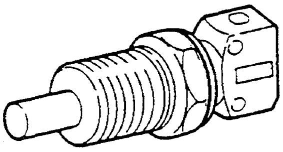

SPECIFICATIONS	
Temperature (°C)	Resistance (Ω)
- 10°C	8100 ÷ 10770 Ω
+ 20°C	2280 ÷ 2720 Ω
+ 80°C	292 ÷ 362 Ω

Intaken air temperature sensor S34

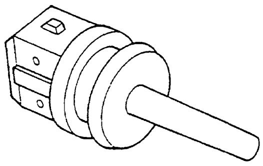

SPECIFICATIONS	
Temperature (°C)	Resistance (Ω)
- 10°C	8100 ÷ 10770 Ω
+ 20°C	2280 ÷ 2720 Ω
+ 80°C	292 ÷ 362 Ω

Air flow meter (S5)

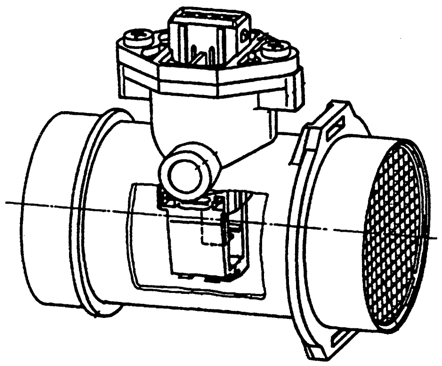

SPECIFICATIONS	
Current that crosses the diaphragm:	
flow rate (kg/h)	current (A)
0 640	≤ 0.25 ≤ 0.80
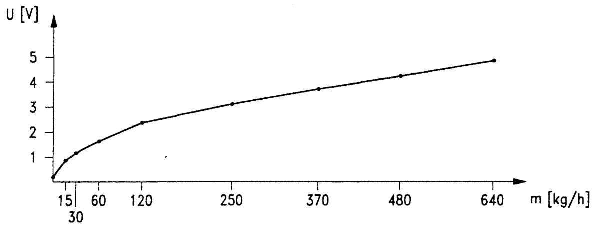 Characteristic curve of sensor m = flow rate U = voltage between pins 4 and 2	

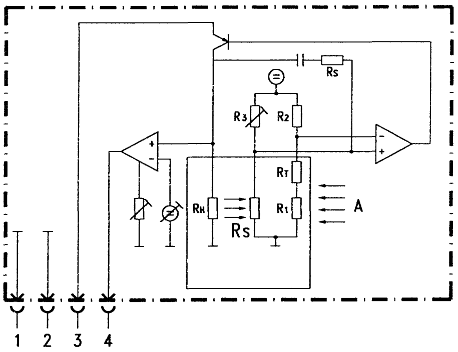

pin 1 - Earth
pin 2 - Reference earth
pin 3 - 12 V supply
pin 4 - Measurement signal
A = air
Rs = hot film sensor

Throttle position sensor (S38)

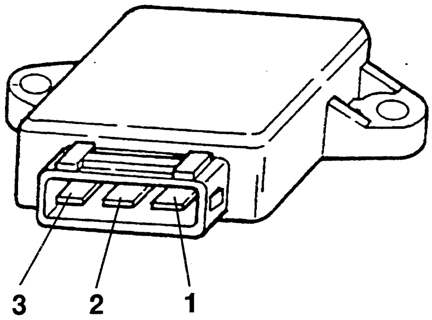

SPECIFICATIONS	
Resistance between terminals:	
1 - 2 (fixed)	≃ 2 kΩ
1 - 3 (throttle closed)	≃ 1 kΩ
1 - 3 (throttle completely open)	≃ 2.7 kΩ

Cam angle sensor (S52)

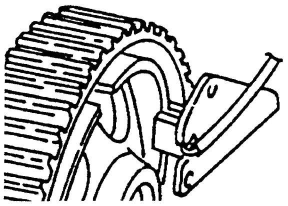

SPECIFICATIONS

The voltage signal "lowers" sharply when the hollow machined on the camshaft passes in front of the sensor itself:

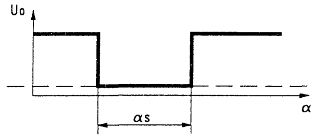

Lambda probe (S35)

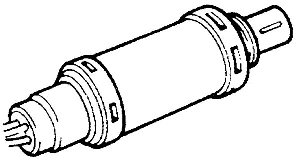

SPECIFICATIONS	
Heating resistance	3 Ω

Electroinjectors (S3)

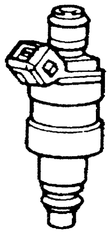

SPECIFICATIONS	
Winding resistance	15.9 ± 0.35 Ω

Fuel pump (P18)

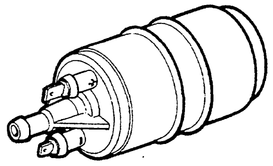

SPECIFICATIONS	
Flow rate	≥120 l/h
Pressure	4 bar
Nominal voltage	12V

Idle speed adjustment actuator (S29)

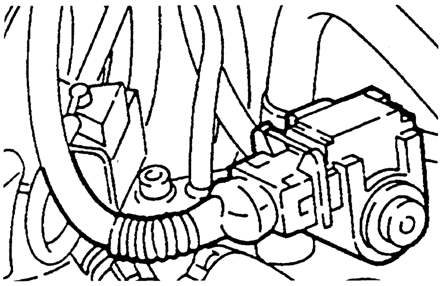

SPECIFICATIONS	
Resistance between terminals:	
1 - 3	~ 33 Ω
1 - 2	~ 17.5 Ω
2 - 3	~ 15.5 Ω

Ignition coils (A8)

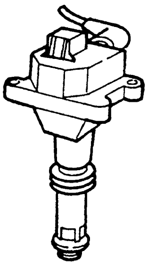

SPECIFICATIONS	
Primary resistance	0.3 Ω ± 12%
Secondary resistance	7 kΩ ± 12%

Evaporative solenoid valve (M15)

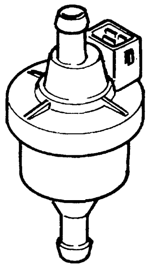

SPECIFICATIONS	
Duty-cycle signal	12 V; 10 Hz
Ohmic resistance of the winding	26 ± 4 Ω
When not energized the solenoid valve is normally closed	

Inertial switch (H20)

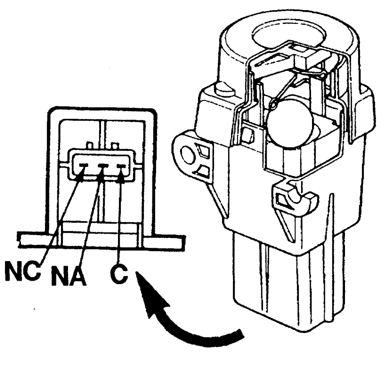

SPECIFICATIONS
Check the continuity between pins NC and C: this continuity is cut off in the event of a crash; the contact is re- connected by pressing the special pushbutton

E.G.R. Solenoid valve (L46)

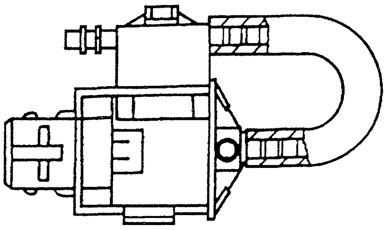

SPECIFICATIONS	
Duty cycle signal	12V; 15.3 Hz
Ohmic resistance of winding (at 20°C)	26.6 ± 1.4 Ω

Timing variator (S15)

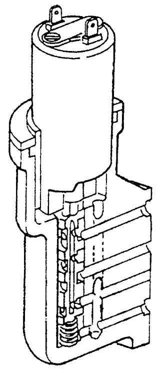

SPECIFICATIONS	
Resistance between the two terminals	~ 10 Ω
Max. absorption at 13.5 V	1.34 A

Knock sensor (S20)

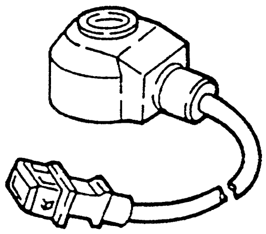

SPECIFICATIONS		
Resonance frequency		> 20 kHz
Impedance		≥ 1 MΩ
Vibration allowed	for long periods	≤ 80 g
	for short periods	≤ 400 g

FAULT-FINDING

The control unit possesses a self-diagnosis system which continuously monitors the signals leading from the different sensors for plausibility and compares them with the allowed limits: if these limits are exceeded the system detects a fault, memorizes it and turns on the warning light on the instrument cluster.

For certain parameters the control unit replaces the abnormal values with suitable mean values to enable the car to "limp" to a point of the Service Network.

These "recovery" values depend on the other correct signals and are defined each time by the operating logic of the control unit.

The self-diagnosis system also makes it possible to quickly and effectively locate faults by connection with the ALFA ROMEO TESTER, through which all the errors memorised may be "read". It is also possible to check the operating parameters recorded by the control unit and command the engagement of the single actuators to check whether they are working properly.

Diagnosis using the ALFA TESTER

N.B. Before carrying out diagnosis with the Tester, make the preliminary check given on the next page (**TEST A**).

The Tester and the control unit should be connected as follows:

1. Power the Tester either through the cigar lighter socket or connecting it directly to the battery using the special cable.
2. Connect the Tester socket to that of the control unit (the socket is to be found next to the control unit).

The Tester can give the following information:

- display of parameters;
- display of errors;
- active diagnosis.

Error clearing

Before ending diagnosis the contents of the "permanent" memory must be erased using the Tester in the Active Diagnosis mode.

Otherwise, when the Tester is re-connected it would signal errors already examined.

The "permanent" memory can be cleared in the following ways:

- through the Tester in Active Diagnosis;
- if the cause of the error is no longer present and the engine has been started 10 times (running for no less than 20 minutes) with at least 2 minutes between one start and the next.

N.B.:
Disconnecting the control unit for at least 30 seconds the "permanent" memory is cleared.

PRELIMINARY CHECK OF THE BOSCH M2.10 SYSTEM — TEST A

NOTE: Check beforehand that the ALFA ROMEO CODE is working properly which might have cut off the supply to the system!

TEST PROCEDURE		RESULT	CORRECTIVE ACTION
A1	CHECK FUSE – Check intactness of fuses **S36**, **S46**, **S47** and **G389**	OK ➔	Carry out **step A2**
		~~OK~~ ➔	Change fuses **S36**: 40A **S46**: 7.5A **S47** : 10A **G389** : 10A (from chassis no.____)
A2	CHECK VOLTAGE – Check for 12 V at pin 30 of relays **S41, S42** and **S12a** and also at pin 85 of **S41**	OK ➔	Carry out **step A3**
		~~OK~~ ➔	Restore the wiring between the battery **A1** and relays **S41, S42** and **S12a**
A3	CHECK VOLTAGE – With the key turned, check for 12 V at pin 85 of relay **S42**	OK ➔	Carry out **step A4**
		~~OK~~ ➔	Restore the wiring between the ignition switch **B1** and relay **S42** and from chassis no.___ - between the fuse **G389**
A4	CHECK RELAYS – Check the correct operation of relays **S41**, **S42** and **S12a**	OK ➔	Carry out **step A5**
		~~OK~~ ➔	Change any faulty relays
A5	CHECK CONTROL UNIT SUPPLY – Check for 12 V at pin 18 of control unit **S11**; with the key turned 12 V also at pins 27 and 37 of **S11** and appr. 0 V (very low voltage) at pin 3 and 36 of **S11**	OK ➔	Carry out **step A6**
		~~OK~~ ➔	Restore the wiring between the control unit **S11** and the relays and between the control unit and fuse **S46**
A6	CHECK EARTH – Check for an earth at pins 19 and 24. Also check for an earth at pin 86 of **S42** .	OK ➔	**CONTINUE DIAGNOSIS USING THE ALFA ROMEO TESTER**
		~~OK~~ ➔	Restore the wiring between **S11** and the relays and earth **G60**

CONTROL SYSTEM -
2.0 T.SPARK 16v engine:
BOSCH MOTRONIC M2.10.4

INDEX

from chassis N°6023907, replaces the previous version MOTRONIC M2.10.3

WIRING DIAGRAM "A"

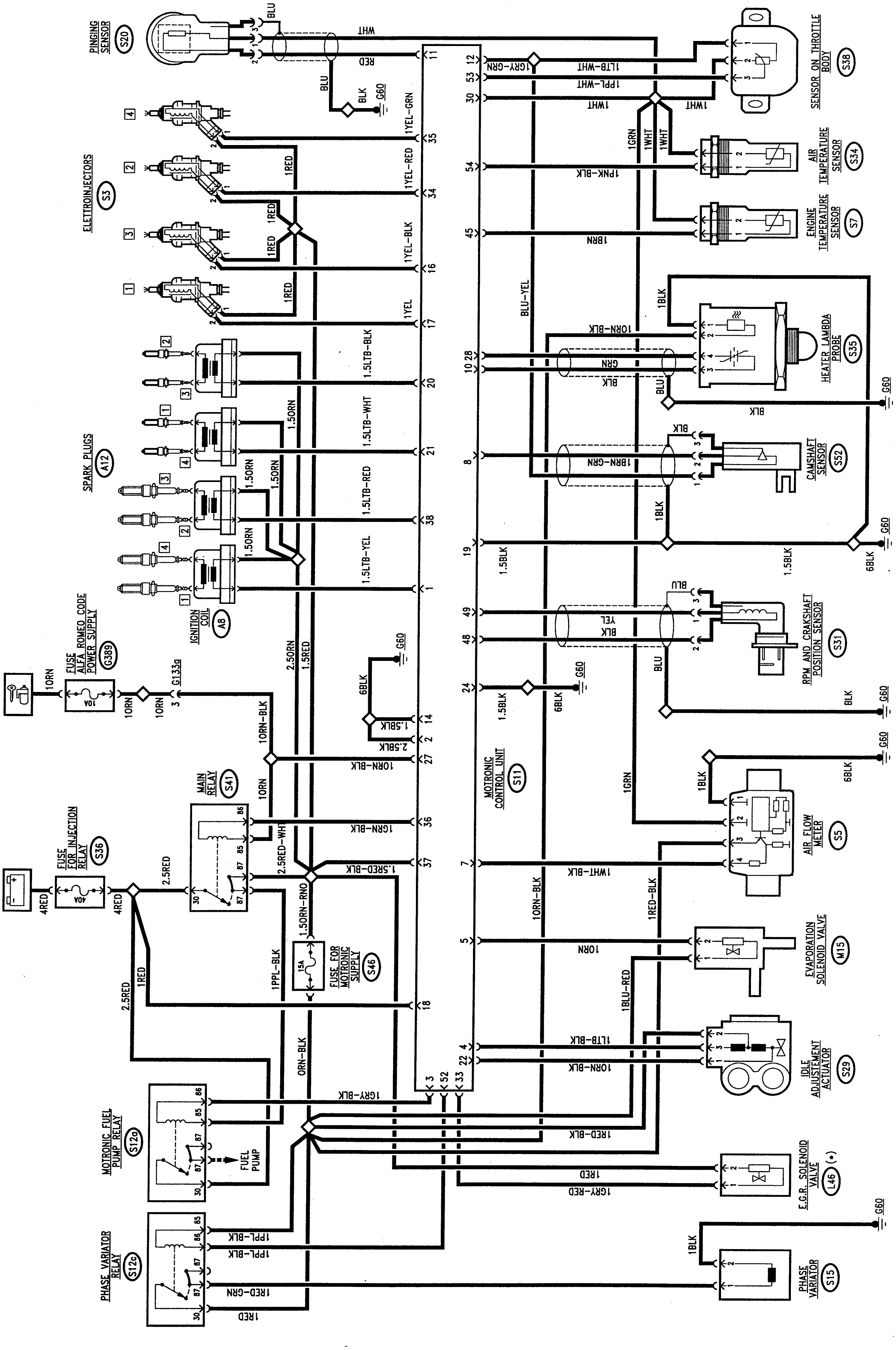

(•) Present for certain cars only

WIRING DIAGRAM "B"

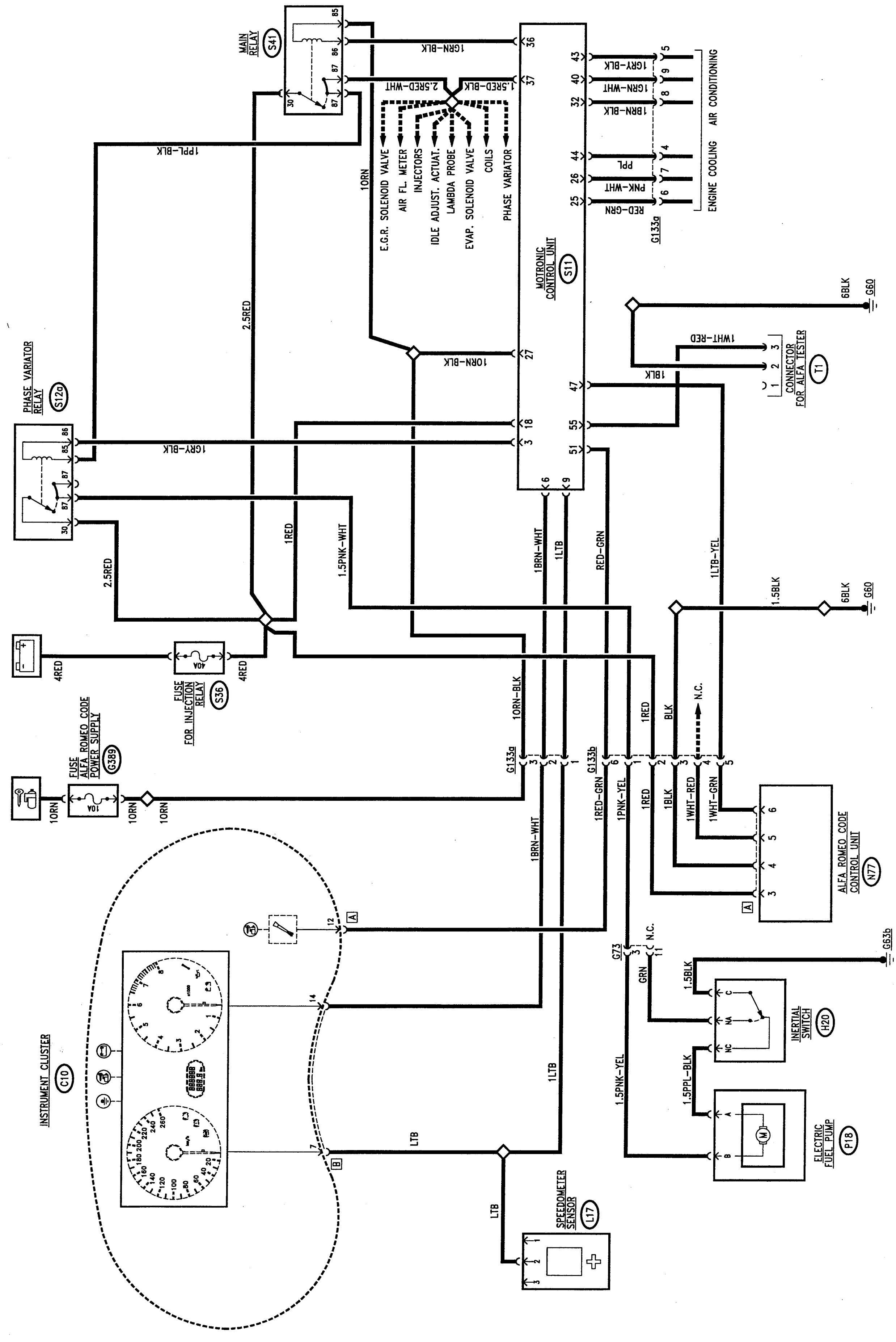

GENERAL DESCRIPTION

An electronic control system supervises and regulates all the parameters of the engine, optimising performance and consumption levels through response in real time to the different operating conditions: this sophisticated latest generation system consists of a single control unit which controls both ignition (static with lost spark) and injection (timed).

This is the M 2.10.4 version of the proven and reliable BOSCH MOTRONIC system.

Compared with the previous versions this new M 2.10.4 system adopts a control unit - with 55 pins - with advanced design and production technology, it also possesses many possibilities for inserting auxiliary functions (engine cooling fan).

As a result of the use of new sensors and revision of the control programmes, the system makes it possible to achieve considerable improvements in terms of consumption, emission levels and vehicle handling.

Another feature of this system is self-adaptation, i.e. the capability to recognise the changes that take place in the engine and to compensate them, according to functions which mainly correct:

- the mixture titration
- the caburetion parameters according to the command of the evaporative solenoid valve
- an adaptive programme for idle speed control.

FUNCTIONS OF THE SYSTEM

Sequential and timed injection (S.E.F.I.)

With this control unit, fuel injection is sequential and timed for each cylinder: the injection instant (delivery of fuel into the intake manifolds by the opening of the injectors) is not simultaneous for all the cylinders, but takes place for each cylinder in correspondence with the optimal point of injection, calculated by the control unit according to special maps depending on the load, speed and temperature of the engine.

Static ignition

An electronic ignition system has been adopted with "static distribution" (with semi-conductors, without distributor). This solution makes it possible to eliminate rotary components; in addition, it does not produce external sparks thus reducing the risk of interferences.

Static ignition takes place through four coils, according to the so-called "lost spark" logic: this solution exploits the different pressures and environments existing contemporaneously in a pair of cylinders: when one of the cylinders approaches the bursting stroke, with a mixture of air and fuel, the corresponding cylinder is at the end of the exhaust stroke in the presence of exhaust gas.

In a 4-cylinder in line engine, the paired cylinders are 1/4 and 2/3.

The solution adopted for this engine (T.SPARK and 16 valves) has required the adoption of a larger "central" spark plug and a smaller "side" spark plug.

Two of the four coils supply the small spark plug of the cylinder below and simultaneously the other two supply the large ones.

NOTE: This way it is also impossible to invert the spark plug cables during servicing operations.

Metering the air flow rate

The air flow meter adopted is of a more modern design known as the "hot film" type.

Outside, the air-flow meter looks like a part of duct between the intake manifold and the air cleaner.

Inside the air-flow meter there is an electronic circuit and a plate that is crossed by the air which passes into the duct. The film plate is kept at a constant temperature (appr. 120°C over the temperature of the incoming air) by a heating resistance placed in contact with it.

The mass of air flowing through the manifold tends to withdraw heat from the plate: therefore, to keep its temperature constant, a certain current needs to flow through the heating resistance: this current, suitably measured, is proportionate with the mass of flowing air.

N.B. This air flow meter measures directly the mass of air (and not the volume as in the previous versions with "floating port", thereby eliminating problems of temperature, altitude, pressure, etc.)

Cylinder detection

Following the sequential and timed injection system, a timing sensor has been introduced (cam angle sensor): this makes it possible to detect which cylinder is in the bursting stroke when the engine is started, in order to be able to start the correct injection sequence. The sensor is formed of a Hall-effect device by which the voltage signal sent to the control unit "lowers" suddenly when the tooth machined on the camshaft pulley passes in front of the actual sensor; therefore a signal is sent every two turns of the crankshaft.

Conversely, the rpm sensor sends a reference signal for each turn of the engine and each subsequent tooth of the phonic wheel informs the control unit of an increase of the angular position of the crankshaft, so that injection is sent correctly to the suitable cylinder and the spark to the corresponding pair of cylinders.

Fuel pump

The complex control logic of the fuel pump carried out by the control unit (mainly based on the rpm signal) immediately cuts off the supply to the pump as soon as the engine stops.
Moreover, the pump will not operate with the key engaged and the engine not running.

In this car, this logic is integrated - in order to further higher the standards of safety - by the **inertial switch** device: this is an electromechanical switch which, in the event of heavy shocks, opens to cut off the circuit that takes the earth to the fuel pump, which stops instantaneously. This device is particularly important as an integration of the safety guaranteed by the logic of the control unit, especially if the car is hit from behind or in the case of other accidents in which the engine does not stop immediately.

Timing variator

This T.SPARK 16 valve engine is fitted with an electro-mechanical-hydraulic timing variator which is connected to the camshaft and controls and adjusts intake timing (advance) in such a way that a larger amount of air is taken in. This device is activated by the control unit only after exceeding a determinate rpm and engine load to avoid adversely affecting correct operation of the engine at low speeds.

Percentage of exhaust gas recirculation

Nox (nitric oxide) is developed at high temperatures in the combustion chambers.
To reduce these emissions an E.G.R. (Exhaust Gas Recirculation) system is adopted which by recirculating part of the exhaust gases, lowers the temperature, thus the Nox produced, in the combustion chambers. In fact, part of the exhaust gas is withdrawn through the special EGR Valve and re-admitted to the intake box where it is mixed with the intaken air and burnt again in the engine. The EGR valve is modulated by a solenoid valve controlled by the injection control unit and, as a result of the type of control, in addition to reducing the amount of Nox, consumption levels are also reduced.

The percentage of exhaust gas to be returned to the engine is established by the control unit taking account of a specific characteristic curve which depends on the load, speed and temperature of the engine.

OPERATING LOGIC

– **Identification of the "operating point":**

the "point of operation of the engine" is located through two sensors: the rpm sensor informs the control unit of the speed of rotation of the engine; the air flow meter supplies the value of the mass of air actually entering the cylinders, defining the instantaneous volumetric yield of the engine.

– **Adjustment of injection times (quantity of fuel):** the control unit controls the injectors extremely quickly and precisely, calculating the opening time on the basis of engine load (rpm and air flow), also taking into account the battery voltage and the temperature of the engine. .

– **Ignition adjustment (calculation of advances)**:

the control unit calculates the advance on the basis of the engine load (rpm and air flow); the value is also corrected according to the temperature of the intaken air and that of the engine: ignition is "static" as described previously.

– **Cold starting control:**

during cold starts the control unit uses special advance values and injection times.

When a determinate temperature/rpm ratio is reached, the control unit resumes normal operating conditions.

– **Control of enrichment during acceleration:**

upon the need for acceleration, the control unit increases injection in order to reach the required load as quickly as possible.
This function takes place through the potentiometer located on the throttle which instantaneously informs the control unit of the need to accelerate.

– **Fuel cut-off during deceleration:**

with the throttle closed and an engine speed above a certain threshold, the control unit de-activates fuel injection; this way the rpms decrease rapidly towards idle speed reducing the speed and fuel consumption. The cut-off threshold value varies according to the temperature of the engine and the speed of the car.

– **Control of idle speed:**

the adjustment of the engine idle speed is carried out through the special actuator fitted directly on the throttle body which acts on the throttle by-pass: in fact, when the throttle is closed, this valve adjusts the by-pass gap compensating the load required by the services in order to ensure that idle speed is as constant as possible.

– **Maximum Rpm limiting:**

above a certain threshold the control unit automatically stops the injection of fuel preventing the engine from "over-revving".

– **Combustion control -lambda sensor-:**

the oxygen sensor (or "lambda" sensor) informs the control unit of the amount of oxygen at the exhaust, and therefore the correct air-fuel metering.

The optimum mixture is obtained when the lambda coefficient = 1 (optimum stoichiometric mixture). The electric signal sent by the sensor to the control unit changes abruptly when the composition of the mixture departs from lambda = 1. When the mixture is "lean" the control unit increases the amount of fuel, reducing it when the mixture is "rich": this way the engine operates as far as possible around the ideal lambda rating.

The signal from the lambda sensor is processed inside the control unit by a special integrator which prevents sudden "oscillations".

The sensor is heated by an electrical resistance so that it quickly reaches the correct operating temperature (appr. 300 °C).

Through this sensor it is therefore possible to adjust engine carburetion precisely. Among other items, this makes it possible to meet emission limit regulations.

– **Timing variator control:**

The electro-mechanical-hydraulic timing variator, connected to the camshaft, controls and adjusts the intake timing according to the load and rpm of the engine. This device is activated by the control unit at higher engine operating speeds (above 1,600 rpm and with load above 30%).

– **Pinging control:**

Through a knock sensor the control unit is informed if any pinging or "pinging" occurs and it corrects the spark advance "delaying" it accordingly; a further correction also takes account of the air temperature, in fact, when the temperature of the intake air is high, pinging is more accentuated.

N.B. The intaken air temperature sensor to be found just downstream of the air-flow meter, is not used to calculate the engine load but to control the pinging parameters.

– **Fuel vapour recovery:**

the fuel vapours collected from the various points of the supply circuit in a special active carbon canister are ducted to the engine where they are burnt: this takes place through a solenoid valve which is opened by the control unit only when the engine is in a condition that allows correct combustion without adversely affecting the operation of the engine: in fact the control unit compensates this amount of fuel by reducing delivery to the injectors.

– **E.G.R. valve control**

The percentage of exhaust gas to be returned to the engine is determined by the control unit taking account of a specific characteristic curve which depends on the engine load and speed: recirculation is only activated when the engine speed is between 2500 and 4000 rpm., also in relation to the temperature of the engine (higher recirculation percentage with high temperatures).

– **Connection with the air conditioner compressor:**

the control unit is connected with the air conditioner system and it cuts in the compressor in relation to operation of the engine.

For further details see section "Air Conditioner"

– **Connection with the radiator cooling fan**

in this version the thermal contact for controlling the cooling fan on the radiator has been eliminated. The command for the first and second speed of the fan is in fact supplied by the injection control unit in relation to the temperature measured by the coolant fluid temperature sensor.

– **Connection with ALFA ROMEO CODE system:**

as soon as the Motronic control unit receives the signal that the key has been turned to MARCIA, it "asks" the above-mentioned system for consent to start the engine: this consent is given only if the ALFRA ROMEO CODE control unit recognizes the code of the key engaged in the ignition switch as correct.

This dialogue between the two control units takes place on the special serial line which connects them.

– **Self-diagnosis:**

the control unit possesses a **self-diagnosis system**, which continuously monitors the plausibility of the signals from the various sensors and compares them with the limits allowed: if these limits are exceeded, the system detects a fault and turns on the corresponding warning light on the instrument cluster.

The warning light turns on when the engine is started to indicate the initial test of the entire system (appr. 4 seconds), it then turns off if no errors have been memorised: otherwise it stays on.

For certain parameters, the control unit replaces the abnormal values with suitable ones so that the car can "limp" to a point of the Service Network.

These "recovery" values depend on the other correct signals and they are defined individually by the control unit operating logic.

The self-diagnosis system also enables quick and effective location of faults connecting with the ALFA ROMEO Tester (see "Fault-finding"), through which all the errors memorised can be "read". It is also possible to check the operating parameters recorded by the control unit and operate the single actuators to check whether they are working properly.

COMPONENTS

The electronic control unit receives the signals leading from the **sensors** which measure the engine operating parameters. It processes them according to a logic stored inside in "maps" which correlate the different parameters in the best way possible and it operates the **actuators** accordingly so that the engine always works with the highest level of regularity and yield.

The sensors are the following:

- engine temperature sensor (**S7**);
- air temperature sensor (**S34**);
- sensor on throttle body (**S38**);
- rpm sensor (**S31**);
- cam angle sensor (**S52**);
- heated lambda sensor (**S35**)
- air-flow meter (**S5**);
- pinging sensor (**S20**);

The actuators are the following:

- injectors (**S3**);
- ignition coils (**A8**);
- fuel pump (**P18**);
- idle adjustment actuator (**S29**);
- vapour recovery solenoid valve (**M15**) ;
- E.G.R. solenoid valve (**L46**); (only for certain cars)
- timing variator (**S15**).

The control unit is also connected with:

- the climate control unit and engine cooling system;
- the ALFA ROMEO CODE control unit (**N77**);
- the instrument cluster (**C10**) to which it supplies the signal for turning on the diagnosis warning light and for the rev counter,
- the tachometric sensor (**L17**) from which it receives the car speed signal.

The system is completed by three relays: the first two - the main relay (**S41**) and the fuel pump relay **S12a** operate the fuel pump, the injectors, the coils and the other components of the system, while the third - the timing variator relay (**S12c**) supplies the corresponding component.

The supply line for the entire system is protected by fuse **S36**, while the control unit is protected by wander fuse (**S46**).
Lastly, there is an earth point (**G60**) on the engine.
Connector **T1** enables connection with the ALFA ROMEO Tester: this is located inside the car next to the control unit.

FUNCTIONAL DESCRIPTION

The Motronic control unit **S11** controls and adjusts the entire electronic ignition and injection system; all the system supplies are protected by fuse **S36** (40A).

The control unit is supplied at pin 18 directly by the battery through fuse **S46** (7.5A). At pin 37 it receives the supply from the main relay **S41**, while at pin 27 it receives the "key- operated" supply.

Pins 2, 14, 19 and 24 are earthed and serve as reference respectively for the ignition, the injectors, electronic screening and the final power stages.

The main relay **S41** controls the entire system; it is energized by a control signal - earth - leading from pin 36 of the control unit and consequently sends the supply (12V) to pin 37 of the control unit itself, to the fuel pump relay **S12a**, to the injectors **S3**, to the coils **A8**, to the EGR solenoid valve **L46** (if present), to the air flow meter **S5** to the sensor **S35**; in addition - through fuse **S46** (15A) - to the timing variator relay **S12c**, to the fuel vapour recovery solenoid valve **M15**, and to the idle speed actuator **S29**.

The fuel pump relay **S12a**, supplied by the main relay **S41**, is energized by a control signal - earth - leading from pin 3 of the control unit **S11**. Consequently, the relay supplies the fuel pump **P18**. In addition the earth reaches the pump **P18** via the inertial switch **H20** which cuts off the circuit in the event of impact.

The control unit **S11** receives numerous signals from the different sensors, thereby keeping all the engine operating parameters under control.

Through a frequency signal sent to pins 48 and 49 of the control unit, the rpm sensor **S31** supplies information about the engine rpm; the two above-mentioned signals are very low in intensity and are therefore suitably screened.

The sensor is inductive and detects the number of revolutions of the engine through the change in a magnetic field produced by the passage of the teeth of a "phonic" wheel (60-2 teeth) fitted on the crankshaft.

The cam angle sensor **S52** (timing sensor), supplied at 5 V by pin 12 of the control unit, and sends a signal in frequency corresponding to the phase to pin 8 of the control unit itself; these two signals are very low in intensity and are therefore suitably screened

The sensor comprises a Hall effect device due to which the voltage signal sent to the control unit "lowers" abruptly when the hollow machined on the camshaft passes in front of the sensor.

The heated lambda sensor **S35** supplies the control unit information about the correct composition of the air-fuel mixture detecting the concentration of oxygen in the exhaust gas; this takes place through the signal sent to pin 28 of the control unit, while pin 10 supplies the reference earth; these two signals are very low in

intensity and are therefore suitably screened.
The sensor is heated by a resistance to make sure that it operates correctly also when the engine is cold; the resistance is supplied by the main relay **S41** and it is protected by a specific fuse **S45**.

The throttle body sensor **S38**, is supplied by the control unit from pins 12 and 30 and through a potentiometer it sends a signal to pin 53 which is proportionate with the degree of opening of the throttle itself.

The engine temperature sensor **S7**, connected to the electronic earth at pin 30, supplies a signal to pin 45 proportionate with the temperature of the engine coolant, detected with an NTC material (resistance that lowers with the temperature).

The intaken air temperature sensor **S34**, connected to the electronic earth at pin 30, supplies a signal at pin 54 that is proportionate with the temperature of the air entering the intake box, detected with an NTC material (resistance that lowers with the temperature).

The pinging sensor **S20**, through a frequency signal sent to pin 11 of the control unit, supplies information about the pinging conditions, while an electronic earth leads from pin 30; these two signals are very low in intensity and are therefore suitably screened.

The sensor comprises a piezoelectric plate which detects the vibrations produced when the engine is running, exploiting a particular characteristic of piezoelectric materials which generate an output voltage when subjected to mechanical stresses; this voltage is filtered and analysed by the control unit which corrects the ignition parameters accordingly.

The air flow meter **S5**, is supplied by the relay **S41**: from pin 30 of the control unit it receives the reference earth, while it sends a signal proportionate with the air flow to pin 7.

The air flow meter is of the "heated film" type: a diaphragm is interposed in a measurement channel, through which the intake air flows: this diaphragm is kept at a constant temperature by a heating resistance; the mass of air that crosses the measurement channel tends to withdraw heat from the diaphragm, therefore, in order to maintain its temperature constant, a certain amount of current must flow through the resistance: this current, appropriately measured, is proportionate with the mass of air flowing in the channel.

On the basis of the signals received from the sensors and of the calculations carried out, the control unit **S11** controls the opening of the single injectors **S3** through special signals - of the duty-cycle type - pins 17 (cyl. 1), 34 (cyl. 2), 16 (cyl. 3) and 35 (cyl. 4). The injectors receive consent (12V) to open from the main relay **S41**.

The static ignition system is controlled by the control unit directly which automatically adjusts the advance. N.B. the power modules which generate the high voltage pulses are located inside the control unit. The control signals (earth) for the primary windings of the coils **A8** lead from the control unit, while the secondary winding sends the pulse to the spark plugs **A12**: from pins 1 and 21 for cylinders 1- 4 and from pins 28 and 30 for cylinders 2-3.

The primary windings of the coils **A8** are supplied at 12 V ("key-operated") by relay **S42**.

The power modules inside the control unit are connected to earth via pin 2.

The idle speed adjustment actuator **S29** forms a bypass line for the flow of air; this comprises two windings: one opens and the other closes a valve that adjusts the gap of the by- pass section; it is controlled by the control unit through the duty-cycle signals of pins 22 (closing) and 4 (opening).

The vapour recovery solenoid valve **M15** allows the passage of the fuel vapours towards the engine intake where they are added to the mixture entering the combustion chamber; this valve, supplied by the main relay **S41**, is opened by the control unit when the engine is under load through a duty cycle signal from pin 5.

The E.G.R. solenoid valve **L46** (if present), controlled by the control unit, operates the actual E.G.R. valve modulating its opening: the latter is a vacuum-operated diaphragm valve: the electropneumatic valve works by changing this vacuum which is withdrawn from the same "takeoff" used for the servobrake.

The solenoid valve is controlled from pin 33 of the control unit while it is supplied at 12 V by main relay **S41**.

The timing variator **S15** mechanically controls timing advance at the intake; it is operated by the corresponding relay **S12c**: this relay is supplied by relay **S41** and it is energized via a negative signal from the control unit (pin 52), thus supplying the timing variator **S15**: this signal operates the actuator which controls the flow of oil in the hydraulic unit of the device that adjusts camshaft rotation.

The tachometric signal (car speed) reaches the control unit at pin 9 via sensor **L17**; while from pin 6 the control unit sends a "pulse" signal to the cluster which is proportionate with the number of revolutions of the engine; the signal for the "Check Engine" warning light on the cluster **C10** leads from pin 51.

The control unit **S11** is connected with the air conditioning system through pins 32, 40 and 43.
This makes it possible to adapt the engine idle speed to the increased power each time the compressor cuts in, or to cut it out in the case of high speed or engine loads.

The control unit **S11** controls and adjusts the system for engaging the engine water cooling fan/s **P2**.

Pins 26 and 25 respectively send the command for engaging the first and second fan speed, while pin 14 recevies consent (earth) for engaging the fan from the pressure switch **Q20**.

The control unit **S11** is connected by pin 55 with the ALFA ROMEO CODE control unit **N77** via the special serial line from pin 47; this way if the ALFA ROMEO CODE system does not recognise a correct "key code" it will not enable the Motronic control unit to start the engine.

The control unit possesses a self-diagnosis system which can be used through connection to the ALFA ROMEO Tester at connector **T1**; the tester receives the fault signals from the control unit through the diagnosis line K - pin 55 -, while the earth leads from **G60**.

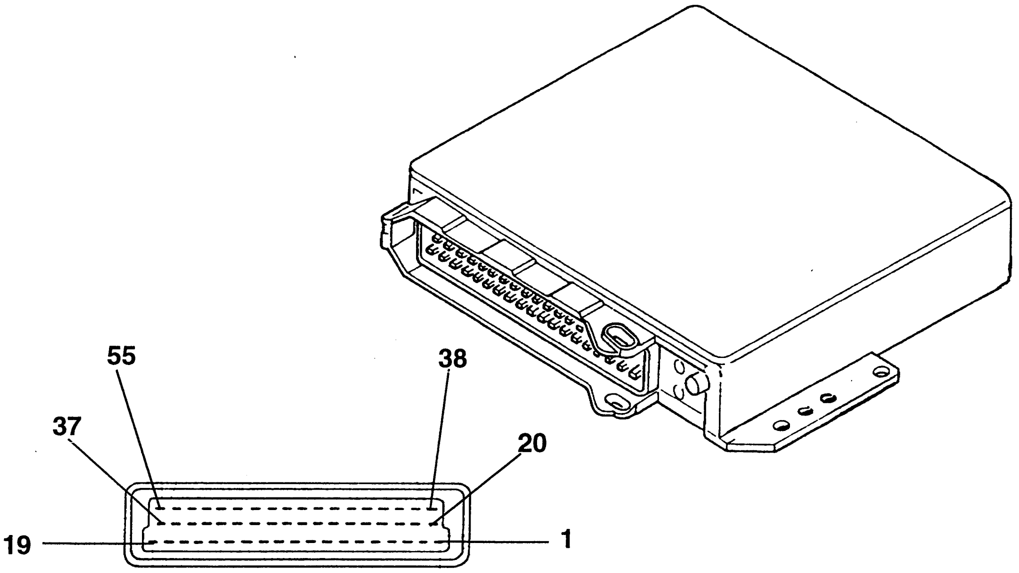

CONTROL UNIT PIN-OUT

1. Ignition coil control - cyl. 1 and 4 -
2. Earth for ignition
3. Fuel pump relay control
4. Idle actuator control - opening
5. Evaporative solenoid valve control
6. Rev counter signal
7. Air flow meter signal
8. Timing signal
9. Car speed signal
10. Lambda sensor signal
11. Pinging sensor signal
12. Stabilized voltage (5V) for sensors
13. N.C.
14. Earth for injectors
15. N.C.
16. Cyl. 3 injector
17. Cyl. 1 injector
18. Direct supply
19. Electronic screening earth
20. Ignition coil control - cyl. 3 and 2
21. Ignition coil control - cyl. 4 and 1
22. Idle speed actuator control - closing
23. N.C.
24. Earth for final stages 25. Fan 2nd speed command
26. Fan 1st speed command
27. "Key-operated" supply
28. Lambda sensor earth
29. N.C.
30. Electronic earth for sensors
31. N.C.
32. Conditioner compressor relay control
33. E.G.R. solenoid valve control (only for certain cars)
34. Injector cyl. 2
35. Injector cyl. 4
36. Main relay control
37. Supply from main relay
38. Cyl. 2 and 3 ignition coil control
39. N.C.
40. Compressor engagement request
41. N.C.
42. N.C.
43. Fand second speed engagement request
44. Fan first speed engagement request
45. Engine temperature signal
46. N.C.
47. Connection line with ALFA ROMEO CODE
48. Signal for rpm sensor
49. Rpm sensor signal
50. N.C.
51. "Check Engine" warning light
52. Timing variator control
53. Throttle position signal
54. Intaken air temperature signal
55. Diagnosis line K

LOCATION OF COMPONENTS

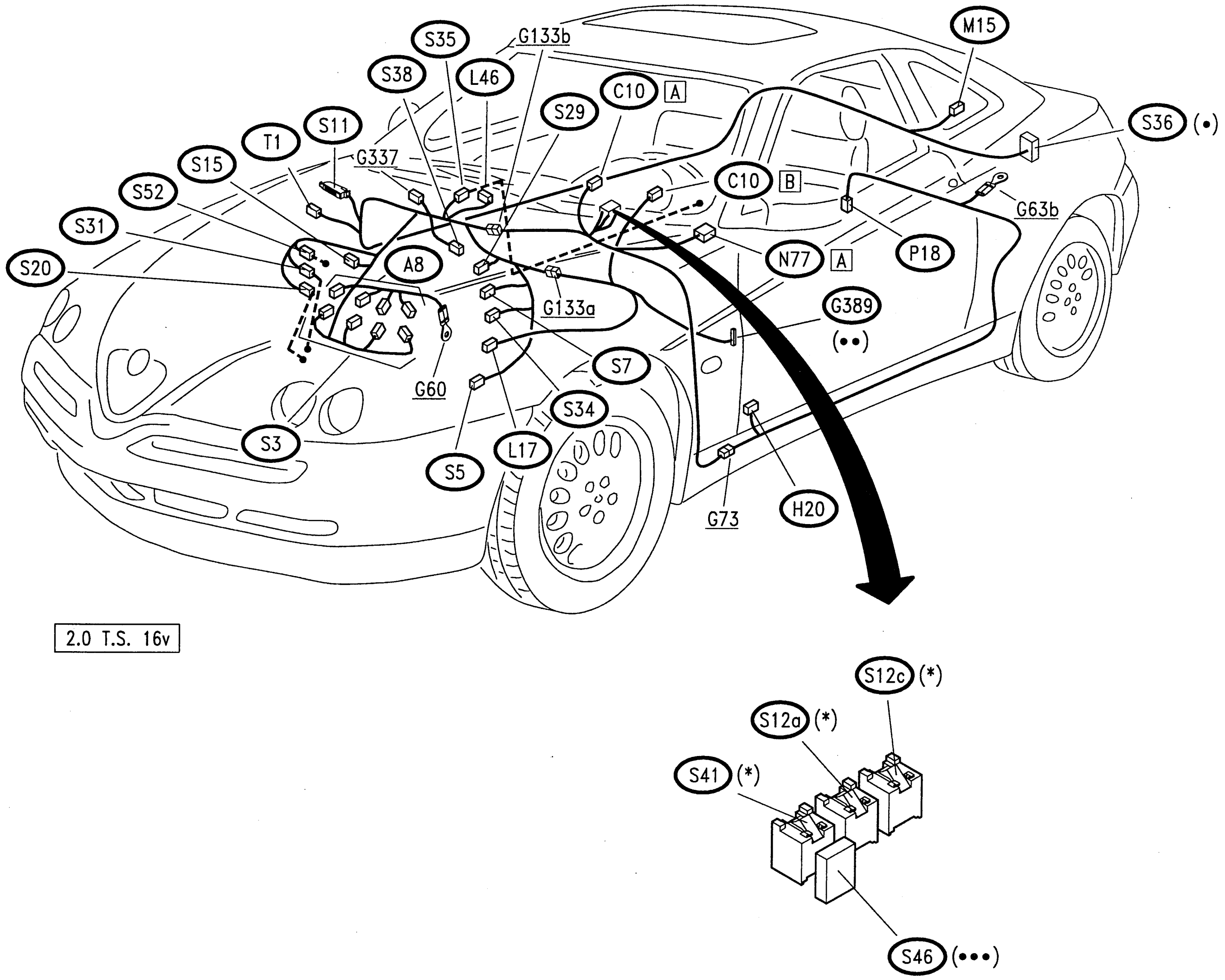

(*) Black base

(•) Black fuseholder
(••) Red fuseholder
(•••) Brown fuseholder

CHECKING COMPONENTS

Rpm sensor (S31)

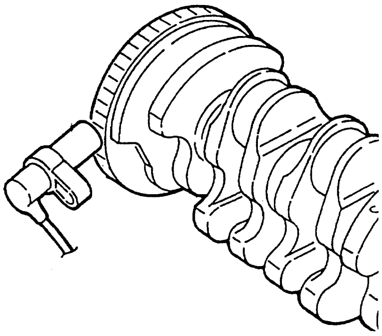

SPECIFICATIONS	
Sensor winding resistance (20 °C)	486 ÷ 594 Ω
Distance (gap) between sensor and phonic wheel	0.5 ÷ 1.5 mm

Engine temperature sensor (S7)

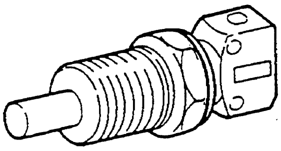

SPECIFICATIONS	
Temperature (°C)	Resistance (Ω)
- 10°C	8100 ÷ 10770 Ω
+ 20°C	2280 ÷ 2720 Ω
+ 80°C	292 ÷ 362 Ω

Intake air temperature sensor (S34)

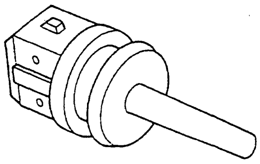

SPECIFICATIONS	
Temperature (°C)	Resistance (Ω)
- 10°C	8100 ÷ 10770 Ω
+ 20°C	2280 ÷ 2720 Ω
+ 80°C	292 ÷ 362 Ω

Air flow meter (S5)

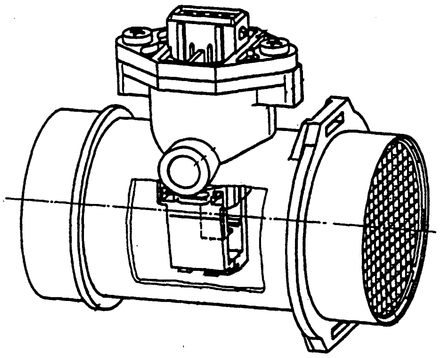

SPECIFICATIONS	
Current that crosses the diaphragm:	
capacity (kg/h)	current (A)
0 640	≤ 0.25 ≤ 0.80
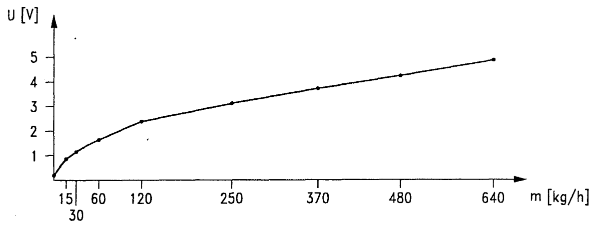 Sensor characteristic curve m = capacity U = voltage between pin 4 and 2	

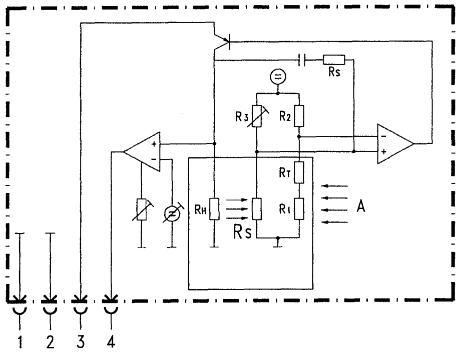

pin 1 - Earth
pin 2 - Reference earth
pin 3 - 12 V supply
pin 4 - Measurement signal
A = air
Rs = hot film sensor

Throttle position sensor (S38)

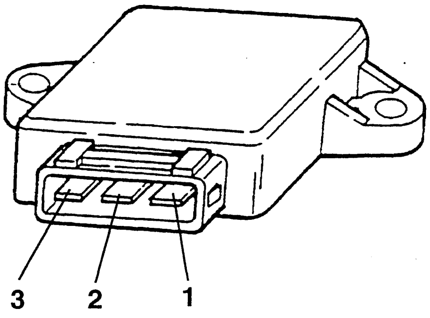

SPECIFICATIONS	
Resistance between terminals:	
1 - 2 (fixed)	~ 2 kΩ
1 - 3 (throttle closed)	~ 1 kΩ
1 - 3 (throttle completely open)	~ 2.7 kΩ

Cam angle sensor (S52)

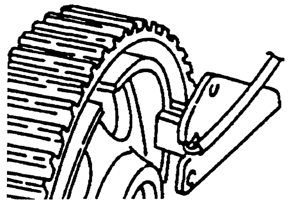

SPECIFICATIONS
The voltage signal "lowers" abruptly when the hollow machined on the camshaft passes in front of the sensor:

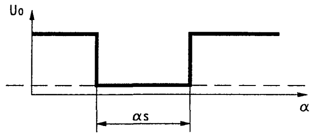

Lambda sensor (S35)

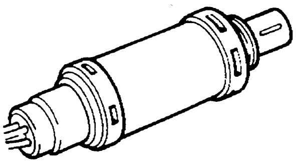

SPECIFICATIONS	
Heating resistance	3 Ω

Injectors (S3)

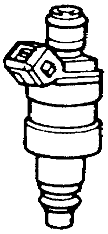

SPECIFICATIONS	
Winding resistance	15.9 ± 0.35 Ω

Fuel pump (P18)

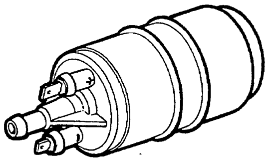

SPECIFICATIONS	
Capacity	≥120 l/h
Pressure	4 bar
Nominal voltage	12V

Idle speed adjustment actuator (S29)

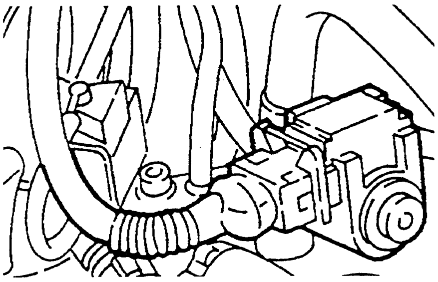

SPECIFICATIONS	
Resistance between terminals:	
1 - 3	~ 33 Ω
1 - 2	~ 17.5 Ω
2 - 3	~ 15.5 Ω

Ignition coils (A8)

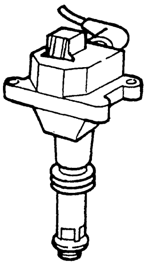

SPECIFICATIONS	
Primary resistance	0.3 Ω ± 12%
Secondary resistance	7 kΩ ± 12%

Evaporative solenoid valve (M15)

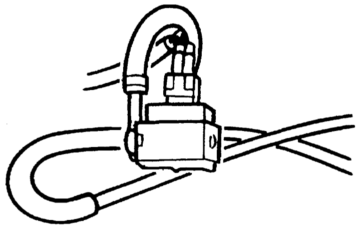

SPECIFICATIONS	
Duty-cycle signal	12 V; 10 Hz
Winding ohmic resistance ohmica	26 ± 4 Ω
When not energised the solenoid valve is normally closed	

Inertial switch (H20)

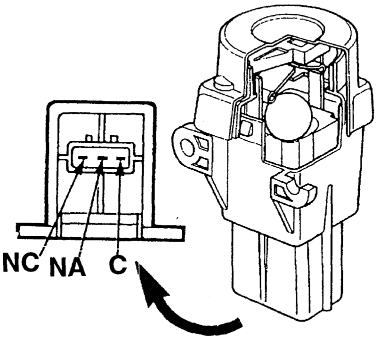

SPECIFICATIONS
Check continuity between pin NC and C: this continuity is cut off in case of a crash: the contact is closed again pressing the special push-button

E.G.R. solenoid valve L46 (if present)

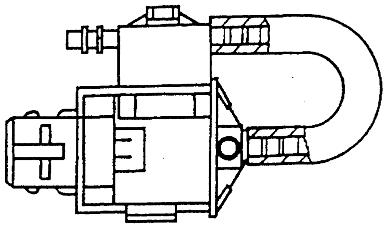

SPECIFICATIONS	
Duty-Cycle signal	12 V; 15.3 Hz
Winding ohmic resistance (at 20°C)	26.6 ± 1.4 Ω

Timing variator S15

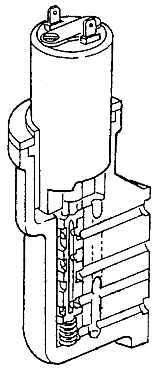

SPECIFICATIONS	
Resistance between the two terminals	~ 10 Ω
Max. absorption at 13.5 V	1.34 A

Pinging sensor S20

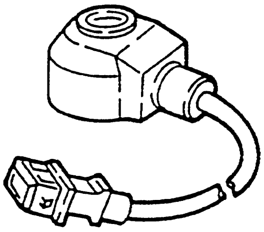

SPECIFICATIONS		
Resonance frequency		> 20 kHz
Impedence		⊥ 1 MΩ
Allowed vibration	for long times	≤ 80 g
	for short times	≤ 400 g

FAULT-FINDING

The control unit possesses a self-diagnosis function which continuously checks the signals from the various sensors for plausibility and comparing them with the permissible limits: if these limits are exceeded, the system detects a fault and memorises it. It also turns on the special warning light on the instrument cluster,

For certain parameters the control unit replaces the abnormal values with appropriate mean values so that the car can "limp" to a point of the Service Network.
These values, known as "recovery" depend on the other correct signals and are defined individually by the control unit operating logic.
The self-diagnosis system also enables quick and effective location of faults connecting with the ALFA ROMEO Tester, through which the errors memorised may be "read". It is also possible to check the operating parameters recorded by the control unit and engage the single actuators to check whether they are working properly.

Diagnosis using the ALFA TESTER

N.B. Before carrying out diagnosis with the Tester, carry out the preliminary test described below (**TEST A**).

The Tester and electronic control unit should be connected as follows:

1. Power the Tester either through the cigar lighter socket or connecting it directly to the battery using the special cable.
2. Connect the socket of the Tester to the one for the control unit (to be found next to the control unit).

The information the instrument can provide is:

- display of parameters;
- display of errors;
- active diagnosis.

Error clearing

Before ending diagnosis the contents of the "permanent" memory are cancelled through the Tester in Active Diagnosis.

Otherwise, reconnecting the Tester errors already examined would be signalled.

The contents of the "permanent memory" can be erased as follows:

- through the tester in Active Diagnosis;
- if the cause that determined the error is no longer present and the engine has been started 10 times (running for no less than 20 minutes) with at least 2 minutes between one start and the next.

N. B.:
Disconnecting the control unit for at least 30 seconds the contents of the "permanent" memory are cleared

PRELIMINARY TEST OF BOSCH M2.10.4 SYSTEM — TEST A

NOTE: Beforehand check that the ALFA ROMEO CODE system is working correctly as it may have cut off the supply to the system!

TEST PROCEDURE		RESULT	CORRECTIVE ACTION
A1	CHECK FUSE – Check the intactness of fuses **S36**, **S46** and **G389**	OK ▶	Carry out **step A2**
		~~OK~~ ▶	Change fuses **S36**: 40A **S46**: 15A **G389**: 10A
A2	CHECK VOLTAGE – Check for 12 V at pin 30 of relays **S41** and **S12a**	OK ▶	Carry out **step A3**
		~~OK~~ ▶	Restore the wiring between the battery **A1** and relays **41** and **S12a** through fuse **S36**
A3	CHECK VOLTAGE – With the key turned, check for 12 V at pin 85 of relay **S41**	OK ▶	Carry out **step A4**
		~~OK~~ ▶	Restore the wiring between the ignition switch **B1** and relay **S41** - through fuse **G389**
A4	CHECK RELAYS – Check that relays **S41** and **S12a** are working properly	OK ▶	Carry out **step A5**
		~~OK~~ ▶	Replace any faulty relays
A5	CHECK CONTROL UNIT SUPPLY – Check for 12 V at pin 18 of the control unit **S11**; with the key turned 12 V also at pins 27 and 37 of **S11** and for appr. 0 V (very low voltage) at pin 3 and 36 of **S11**	OK ▶	Carry out **step A6**
		~~OK~~ ▶	Restore the wiring between the control unit **S11** and relays **S41** and **S12a**
A6	CHECK EARTH – Check for an earth at pins 2, 14, 19 and 24 of **S11**	OK ▶	**CONTINUE DIAGNOSIS USING THE ALFA ROMEO TESTER**
		~~OK~~ ▶	Restore the wiring between **S11** and earth **G60**

CONTROL SYSTEM -
3.0 V6 Engine:
BOSCH MOTRONIC M3.7

INDEX

WIRING DIAGRAM A

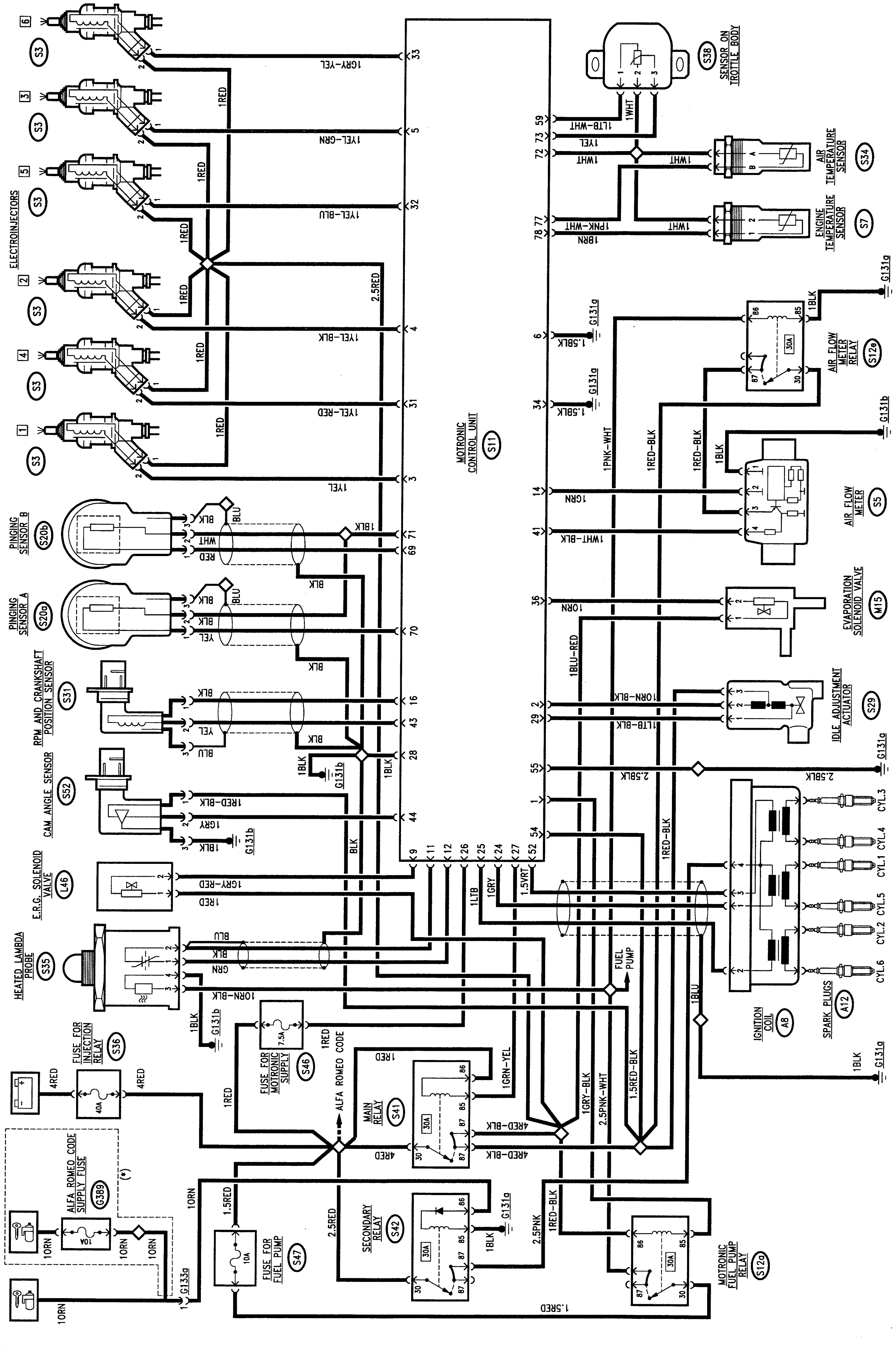

(*) from chassis no._____

WIRING DIAGRAM B

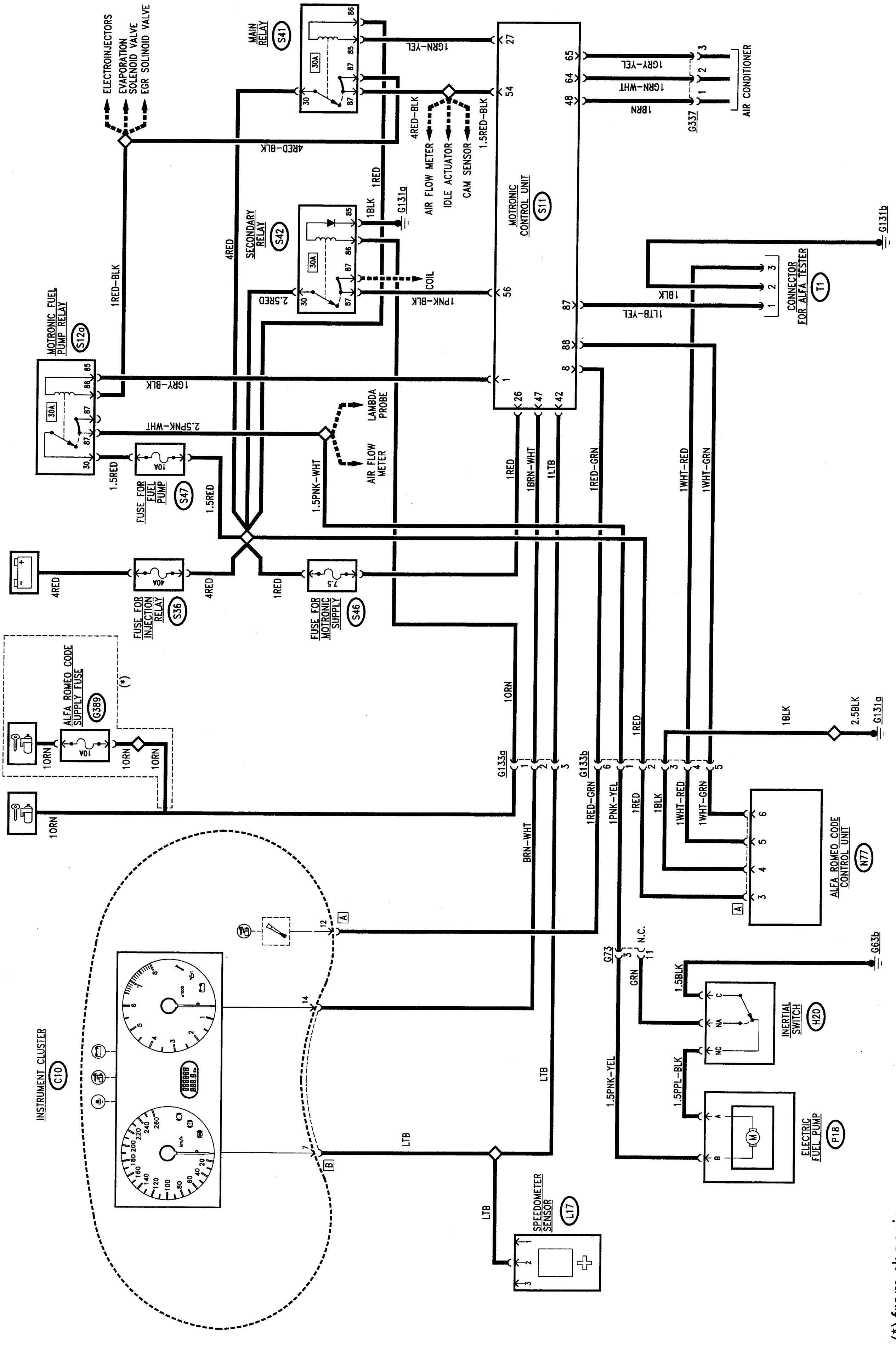

(*) from chassis no.____

GENERAL DESCRIPTION

An electronic control system supervises and regulates all the parameters of the engine, optimising performance and consumption levels through response in real time to the different operating conditions: this sophisticated latest generation system comprises a single control unit which controls both ignition (static with lost spark) and injection (timed).

This is the M 3.7 version of the proven and reliable BOSCH MOTRONIC system.

Compared with the previous versions this new M 3.7 system adopts a control unit - with 88 pins - with advanced design and production technology, it also possesses many possibilities for inserting auxiliary functions.

Owing to the use of new sensors and revision to the control programmes, the system makes it possible to achieve considerable improvements in terms of consumption, emission levels and handling of the vehicle.

Another feature of this system is self-adaptation, i.e. the capability to recognise the changes that take place in the engine and to compensate them, according to functions which mainly correct:

- mixture titration
- the carburetion parameters according to the command of the evaporative solenoid valve
- an adaptive programme for idle speed control.

FUNCTIONS OF THE SYSTEM

Sequential and timed injection (S.E.F.I.)

With this control unit injection is sequential and timed for each cylinder: the injection instant (delivery of fuel into the intake manifolds through the opening of the injectors) is not simultaneous for all the cylinders, but takes place for each cylinder in correspondence with the optimal point of injection, calculated by the control unit according to special maps according to the load, speed and temperature of the engine.

NOTE: the instant considered in the design of the maps is that of the start of injection (the cylinder is in the exhaust stroke - intake valve still closed).

Static ignition

An ignition system has been adopted with "static distribution" (with semi-conductors, without distributor). This solution makes it possible to eliminate rotary components; in addition, it does not produce external sparks thus reducing the risk of interferences; lastly it reduces the number of high voltage cables and connectors; as the power modules for controlling the primary windings of the coil are inside the control unit.

Static ignition takes place through three coils, according to the "lost spark" logic: this solution exploits the different pressures and environments existing contemporaneously in a pair of cylinders: when one of the cylinders approaches the bursting stroke, with a mixture of air and fuel, the corresponding cylinder is at the end of the exhaust stroke in the presence of exhaust gas.

In a V six-cylinder engine, the paired cylinders are 1/5 6/2 and 3/4.

Metering the air flow rate

The air flow meter adopted is of a more modern design known as the "hot film" type. Outside, the air-flow meter looks like a part of duct between the intake manifold and the air cleaner.

Inside the air-flow meter there is an electronic circuit and a plate that is crossed by the air which passes in the duct.

The film plate is kept at a constant temperature (appr. 120°C above the temperature of the incoming air) by a heating resistance placed in contact with it.

The mass of air flowing through the manifold tends to withdraw heat from the plate: therefore, to keep its temperature constant, a certain current needs to flow through the heating resistance: this current, suitably measured, is proportionate with the mass of flowing air.

N.B. This air flow meter measures directly the mass of air (and not the volume as in the previous versions with "floating port"), thereby eliminating problems of temperature, altitude, pressure, etc.

Cylinder detection

Following the sequential and timed injection system, a timing sensor has been introduced (cam angle sensor): this makes it possible to detect which cylinder is in the bursting stroke when the engine is started, in order to be able to start the correct injection sequence. The sensor is formed of a Hall-effect device by which the voltage signal sent to the control unit "lowers" suddenly when the tooth machined on the camshaft passes in front of the actual sensor; therefore a signal is sent every two turns of the crankshaft.

Conversely, the rpm sensor sends a reference signal for each turn of the engine and each subsequent tooth of the phonic wheel informs the control unit of an increase of the angular position of the crankshaft, so that injection is sent correctly to the suitable cylinder and the spark to the corresponding pair of cylinders.

Fuel pump

The control logic of the fuel pump carried out by the control unit which is mainly based on the rpm signal immediately cuts off the supply to the pump as soon as the engine stops.

Moreover, the pump will not operate with the key engaged and the engine not running.

In this car, this logic is integrated - in order to further higher the standards of safety - by the **inertial switch** device: this is an electromechanical switch which, in the event of heavy shocks, opens to cut off the circuit that takes the earth to the fuel pump, which stops instantaneously. This device is particularly important as an integration of the safety guaranteed by the logic of the control unit, especially if the car is hit from behind or in the case of other accidents in which the engine does not stop immediately.

Percentage of exhaust gas recirculation

Nox (nitric oxide) is developed at high temperatures in the combustion chambers.

To reduce these emissions an E.G.R. (Exhaust Gas Recirculation) system is adopted which by recirculating part of the exhaust gases, lowers the temperature, thus the Nox produced, in the combustion chambers. In fact, part of the exhaust gas is withdrawn through the special EGR Valve and re-admitted to the intake box where it is mixed with the intaken air and burnt again in the engine. The EGR valve is modulated by a solenoid valve controlled by the injection control unit and, as a result of the type of control, in addition to reducing the amount of Nox, consumption levels are also optimised.

The percentage of exhaust gas to be returned to the engine is established by the control unit taking account of a specific characteristic curve which depends on the load, speed and temperature of the engine.

OPERATING LOGIC

– **Identification of the "operating point":**

the "point of operation of the engine" is located mainly through two sensors: the rpm sensor informs the control unit of the speed of rotation of the engine; the air flow meter supplies the value of the mass of air actually entering the cylinders, defining the instantaneous volumetric yield of the engine.

– **Adjustment of injection times (quantity of fuel):**

the control unit controls the injectors very quickly and precisely, calculating the opening time on the basis of engine load (rpm and air flow), also taking into account the battery voltage and the temperature of the engine. Injection is "sequential", i.e. the injectors are opened in correspondence of the exhaust stroke of the corresponding cylinder.

– **Ignition adjustment (calculation of advances)**:

the control unit calculates the advance on the basis of the engine load (rpm and air flow); the value is also corrected according to the temperature of the intaken air and that of the engine: ignition is "static" as described previously.

– **Cold starting control:**

during cold starts the control unit uses special advance values and injection times.

When a determinate temperature/rpm ratio is reached, the control unit resumes normal operating conditions.

– **Control of enrichment during acceleration:**

upon the need for acceleration, the control unit increases injection in order to reach the required rpm as quickly as possible.
This function takes place through the potentiometer located on the throttle which instantaneously informs the control unit of the need to accelerate.

– **Fuel cut-off during deceleration:**

with the throttle closed and an engine speed above a certain threshold, the control unit de-activates fuel injection; this way the rpms decrease rapidly towards idle speed reducing the speed and fuel consumption. The cutoff threshold value varies according to the temperature of the engine and the speed of the car.

– **Control of idle speed:**

the adjustment of the engine idle speed is carried out through the special actuator which acts on the throttle by- pass.
This device acts as a regulator for cutting in the various services (e.g. conditioner compressor): in fact, when the throttle is closed, this valve adjusts the by-pass gap compensating the load required by the services in order to ensure that idle speed is as constant as possible.

- **Maximum Rpm limiting:**

above a certain threshold the control unit automatically stops the injection of fuel preventing the engine from "over-revving".

- **Combustion control -lambda probe-:**

the oxygen sensor (or "lambda" probe) informs the control unit of the amount of oxygen at the exhaust, and therefore the correct air-fuel metering.

The optimum mixture is obtained when the lambda coefficient = 1 (optimum stoichiometric mixture). The electric signal sent by the probe to the control unit changes abruptly when the composition of the mixture departs from lambda = 1. When the mixture is "lean" the control unit increases the amount of fuel, reducing it when the mixture is "rich" so that in this way the engine operates as far as possible around the ideal lambda rating.
The signal from the lambda probe is processed inside the control unit by a special integrator which prevents sudden "oscillations".
The probe is heated by an electrical resistance so that it quickly reaches the correct operating temperature (appr. 300 °C).
Through this probe it is therefore possible to adjust engine carburetion precisely. Among other items, this makes it possible to meet emission limit regulations.

- **Knocking control:**

Through knocking sensors the control unit is informed if any pinging or "knocking" occurs and it corrects the spark advance "delaying" it accordingly; a further correction also takes account of the air temperature, in fact when the temperature of the intake air is high, pinging is more accentuated.

The intaken air temperature sensor, to be found just downstream of the air-flow meter, is not used to calculate the engine load but to control the knocking parameters and spark advances.

- **Fuel vapour recovery:**

the fuel vapours collected from the various points of the supply circuit in a special active carbon canister are ducted to the engine where they are burnt: this takes place through a solenoid valve which is opened by the control unit only when the engine is in a condition that allows correct combustion without adversely affecting the operation of the engine: in fact the control unit compensates this amount of incoming fuel by reducing delivery to the injectors.

- **E.G.R. valve control**

The percentage of exhaust gas to be returned to the engine is determined by the control unit taking account of a specific characteristic curve which depends on the engine load and speed: recirculation is only activated when the engine speed is between 2500 and 4000 rpm., also in relation to the temperature of the engine (higher recirculation percentage with high temperatures).

- **Connection with the air conditioner compressor:**

the control unit is connected with the air conditioner system and it cuts in the compressor in relation to operation of the engine. As this service absorbs a considerable amount of power, the control unit:

- adapts the engine idle speed each time the compressor cuts in; if the engine speed falls below 700 rpm, the compressor is turned off;
- when there is the need for power (high throttle opening speed starting from below 3500 rpm, or full load, or high engine temperature - over 117°C), it momentaneously cuts out the compressor
- when the engine is being started the compressor is disabled until normal operating conditions have been reached.

- **Connection with the ALFA ROMEO CODE system**

on cars fitted with the ALFA ROMEO CODE system, as soon as the Motronic control unit receives the signal that the key has been turned to MARCIA, it "asks" the above-mentioned system for consent to start the engine: this consent is given only if the ALFA ROMEO CODE control unit recognizes the code of the key engaged in the ignition switch as correct. This dialogue between the control units takes place on diagnosis line K already used for the Alfa Romeo Tester.

- **Self-diagnosis:**

the key a **self-diagnosis system**, which continuously monitors the plausibility of the signals from the various sensors and compares them with the limits allowed: if these limits are exceeded, the system detects a fault and turns on the corresponding warning light on the instrument cluster.

The warning light turns on when the engine is started to indicate the initial test of the entire system (appr. 4 seconds), it then turns off if no errors have been memorised: otherwise it stays on.

For certain parameters, the control unit replaces the abnormal values with suitable mean ones so that the car can "limp" to a point of the Service Network.

These "recovery" values depend on the other correct signals and they are defined individually by the control unit operating logic.

The self-diagnosis system also enables quick and effective location of faults connecting with the ALFA ROMEO Tester (see "Fault-finding"), through which all the errors memorised can be displayed. It is also possible to check the operating parameters recorded by the control unit and operate the single actuators to check whether they are working properly.

COMPONENTS

The electronic control unit receives the signals leading from the **sensors** which "read" the engine operating parameters. It processes them according to a logic stored inside in "maps" which correlate the different parameters in the best way possible and it operates the **actuators** accordingly so that the engine always works with the highest level of regularity and yield.

The sensors are the following:

- engine temperature sensor (**S7**);
- air temperature sensor (**S34**);
- sensor on throttle body (**S38**);
- rpm sensor (**S31**);
- cam angle sensor (**S52**);
- heated lambda sensor (**S35**)
- air-flow meter (**S5**);
- knock sensors (**S20a** and **s20b**);

The actuators are the following:

- electroinjectors (**S3**);
- ignition coil (**A8**);
- fuel pump (**P18**);
- idle adjustment actuator (**S29**);
- vapour recovery solenoid valve (**M15**) ;
- E.G.R. solenoid valve (**L46**);

The control unit is also connected with:

- the climate control unit;
- the ALFA ROMEO CODE control unit (**N77**);
- the instrument cluster (**C10**) to which it supplies the signal for turning on the diagnosis warning light and for the rev counter;
- the sensor (**L17**) from which it receives the car speed signal.

The system is completed by four relays: the first three - the main relay (**S41**), secondary relay **S42** and the fuel pump relay **S12a** operate the fuel pump, the injectors, the coils and the other components of the system, while the fourth - the air-flow meter relay (**S12e**) supplies the corresponding component.

The supply line for the entire system is protected by fuse **S36**, while the control unit is protected by wander fuse (**S46**); another fuse protects the pump (**S47**). Lastly, there is an earth point (**G60**) on the engine. Connector **T1** enables connection with the ALFA ROMEO Tester: this is located inside the car next to the control unit.

FUNCTIONAL DESCRIPTION

The Motronic control unit **S11** controls and adjusts the entire electronic ignition and injection system; all the system supplies are protected by fuse **S36** (40A).

The control unit is supplied at pin 26 directly by the battery through fuse **S46** (7.5A). At pin 54 it receives the supply from the main relay **S41**, while at pin 56 it receives the "key- operated" supply from the secondary relay **S42**.

Pins 55, 6, 28 and 34 are earthed and serve as reference respectively for the ignition, the injectors, electronic screening and the final power stages.

Two relays control the entire system:

The main relay **S41**, acts as supply relay for the whole system; it is energized by a control signal - earth - leading from pin 27 of the control unit and consequently sends the supply (12V) to pin 54 of the control unit itself, to the fuel pump relay **S12a**, to the air-flow meter relay **S12a** to the vapour recovery solenoid valve **M15**, to the idle speed actuator **S29**, to the cam angle sensor **S52**, to the EGR solenoid valve **L46** and lastly to the injectors **S3**.

The secondary relay **S42**, energized by the "key-operated" - from chassis no.___ - between the fuse **G389** - supply, supplies the control unit at pin 56 and the primary windings of the coil **A8**.

The fuel pump relay **S12a**, supplied by the main relay **S41**, is energized by a control signal - earth - leading from pin 1 of the control unit **S11**. Consequently, the relay supplies the resistance of the lambda probe **S35**, the air flow meter relay **S12e**, and of course the fuel pump **P18**; this supply line is protected by a special fuse **S47** (10A).

The earth reaches the pump **P18** via the inertial switch **H20** which cuts off the circuit in the event of impact.

The control unit **S11** receives numerous signals from the different sensors, thereby keeping all the engine operating parameters under control.

Through a frequency signal sent to pins 43 and 16 of the control unit, the rpm sensor **S31** supplies information about the engine rpm; the two above-mentioned signals are very low in intensity and are therefore suitably screened.

The sensor is inductive and detects the number of revolutions of the engine through the change in a magnetic field produced by the passage of the teeth of a "phonic" wheel (60-2 teeth) fitted on the crankshaft.

The cam angle sensor **S52** (timing sensor), is supplied at 12 V by the main relay **S41**, and sends a signal in frequency corresponding to the phase to pin 44 of the control unit itself.
The sensor comprises a Hall effect device due to which the voltage signal sent to the control unit

"lowers" abruptly when the tooth machined on the camshaft passes in front of the sensor.

The heated lambda sensor **S35** supplies the control unit information about the correct composition of the air-fuel mixture detecting the concentration of oxygen in the exhaust gas; this takes place through the signal sent to pin 12 of the control unit, while pin 11 supplies the reference earth; The sensor is heated by a resistance to make sure that it operates correctly also when the engine is cold; the resistance is supplied by the fuel pump relay **S12a.**

The throttle body sensor **S38**, is supplied by the control unit from pins 59 and 72 and through a potentiometer it sends a signal to pin 73 which is proportionate with the degree of opening of the throttle itself.

The engine temperature sensor **S7**, connected to the electronic earth at pin 72, supplies a signal to pin 78 proportionate with the temperature of the engine coolant, detected with an NTC material (resistance that lowers with the temperature).

The intaken air temperature sensor **S34**, connected to the electronic earth at pin 72, supplies a signal at pin 77 that is proportionate with the temperature of the air entering the intake box, detected with an NTC material (resistance that lowers with the temperature).

The knock sensors **S20a and S20b**, through a frequency signal sent to pins 69 and 70 of the control unit, supplies information about the knocking conditions, while an electronic earth leads from pin 71; these two signals are very low in intensity and are therefore suitably screened.

The sensor comprises a piezoelectric plate which detects the vibrations produced when the engine is running, exploiting a particular characteristic of piezoelectric materials which generate an output voltage when subjected to mechanical stresses; this voltage is filtered and analysed by the control unit which corrects the ignition parameters accordingly.

The air flow meter **S5**, is supplied by the special relay **S12e**: from pin 14 of the control unit it receives the reference earth, while it sends a signal proportionate with the air flow to pin 41.
The air flow meter is of the "heated film" type: a diaphragm is interposed in a measurement channel, through which the intake air flows: this diaphragm is kept at a constant temperature by a heating resistance; the mass of air that crosses the measurement channel tends to withdraw heat from the diaphragm, therefore, in order to maintain its temperature constant, a certain amount of current must flow through the resistance: this current, appropriately measured, is proportionate with the mass of air flowing in the channel.

Relay **S12e**, supplied directly with 12 V by relay **S41**, is energized by the fuel pump relay **S12a** and thus supplies the meter **S5** itself.

On the basis of the signals received from the sensors and of the calculations carried out, the control unit **S11** controls the opening of the single injectors **S3** through special signals - of the duty-cycle type - pins 3 (cyl. 1), 4 (cyl. 2), 5 (cyl. 3) 31 (cyl. 4), 32 (cyl. 5) and 33 (cyl. 6). The injectors receive consent (12V) to open from the main relay **S41**.

The static ignition system is controlled by the control unit directly which automatically adjusts the advance. N.B. the power modules which generate the high voltage pulses are located inside the control unit. The control signals (earth) for the primary windings of the coil **A8** lead from the control unit, while the secondary winding sends the pulse to the spark plugs **A12**: from pin 24 for cylinders 1/5, from pin 25 for cylinders 2/6 and from pin 52 for cylinders 3/4.
The primary windings of the coil **A8** are supplied at 12 V ("key- operated") by relay **S42**.

The power modules inside the control unit are connected to earth via pin 55.

The idle speed adjustment actuator **S29** forms a bypass line for the flow of air; this comprises two windings: one opens and the other closes a valve that adjusts the gap of the by- pass section; a safety spring establishes a mean opening value in the event of a failure to this device; the actuator, supplied by the main relay, **S41**, is controlled by the control unit through the duty-cycle signals of pins 29 (closing) and 2 (opening).

The vapour recovery solenoid valve **M15** allows the passage of the fuel vapours towards the engine intake where they are added to the mixture entering the combustion chamber; this valve, supplied by the main relay **S41**, is opened by the control unit when the engine is under load through a duty cycle signal from pin 36.

The E.G.R. solenoid valve **L46**, controlled by the control unit, operates the actual E.G.R. valve modulating its opening: the latter is a vacuum-operated diaphragm valve: the electropneumatic valve works by changing this vacuum which is withdrawn from the same "takeoff" used for the servobrake.
The solenoid valve is controlled from pin 9 of the control unit while it is supplied at 12 V by main relay **S41**.

The tachometric signal (car speed) reaches the control unit at pin 42 via sensor **L17**; while from pin 47 the control unit sends a "pulse" signal to the cluster **C10** which is proportionate with the number of revolutions of the engine; the signal for the "Check Engine" diagnosis warning light on the cluster **C10** leads from pin 8.

The control unit **S11** is connected with the air conditioning system through pins 48, 64 and 65.
This makes it possible to adapt the engine idle speed to the increased power each time the compressor cuts in, or to cut it out in the case of high speed or engine

loads. For further details see the "Climate Control" section.

The control unit **S11** is connected by pin 88 with the ALFA ROMEO CODE control unit **N77** via the diagnosis line K; if the ALFA ROMEO CODE does not recognise a correct "key code" it will not enable the Motronic control unit to start the engine.

The control unit possesses a self-diagnosis system which can be used through connection to the ALFA ROMEO Tester at connector **T1**; the tester receives the fault signals from the control unit through the diagnosis lines L - pin 87 - and K - pin 88 -, while the earth leads from **G60** (line K is also used by the ALFA ROMEO CODE system).

ELECTRONIC CONTROL UNIT

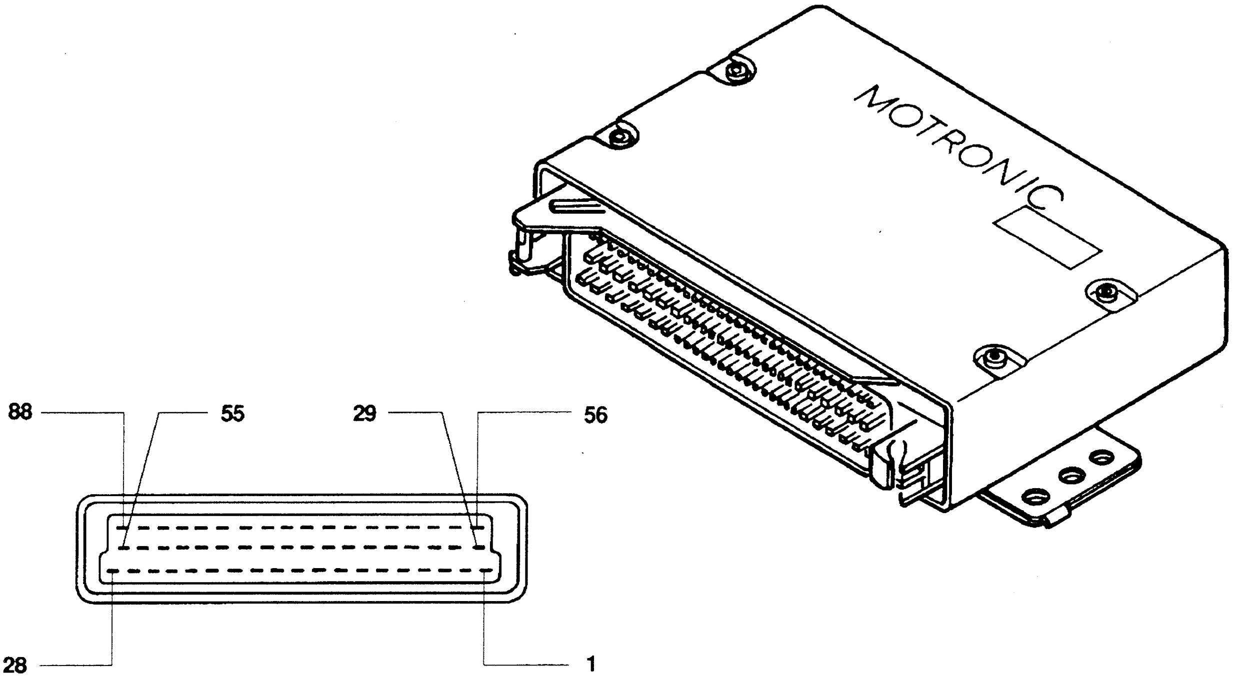

CONTROL UNIT PINOUTS

1. Fuel pump relay consent
2. Idle actuator control (open) signal
3. Electroinjector control, cylinder no.1
4. Electroinjector control, cylinder no.2
5. Electroinjector control, cylinder no.3
6. Earth for final stages (injectors)
8. "Check Engine" warning light
9. E.G.R. solenoid valve control
11. Lambda sensor earth
12. Lambda sensor signal
14. Earth for air flow meter
16. Rpm sensor signal
24. Ignition cylinders no.1 and 5
25. Ignition cylinders no.2 and 6
26. Direct 12V supply
27. Main relay control
28. Electronic earth (sensor screening)
29. Idle speed actuator signal (closed)
31. Electroinjector control, cylinder no.4
32. Electroinjector control, cylinder no.5
33. Electroinjector control, cylinder no.6
34. Earth for final stages
36. Evaporative solenoid valve signal
41. Air-flow meter signal
42. Car speed signal input
43. Rpm sensor signal
44. Camanglesensor
47. Engine rpm signal output
48. Climate control unit relay control
52. Ignition cylinders no. 3 and 4
54. Supply from main relay 12V
55. Earth for ignition
56. "Key-operated" supply from secondary relay
59. Reference voltage (5V) for throttle sensor
64. Climate control system signal
    (compressor cut in request)
65. Climate control system signal (system control)
69. Knock sensor signal 2
70. Knock sensor signal 1
71. Earth for knock sensors
72. Electronic earth for sensors
73. Throttle angle sensor signal
77. Air temperature sensor signal
78. Water temperature sensor signal
87. Diagnosis, line L
88. Diagnosis, line K (also for ALFA ROMEO
    CODE system)

LOCATION OF COMPONENTS

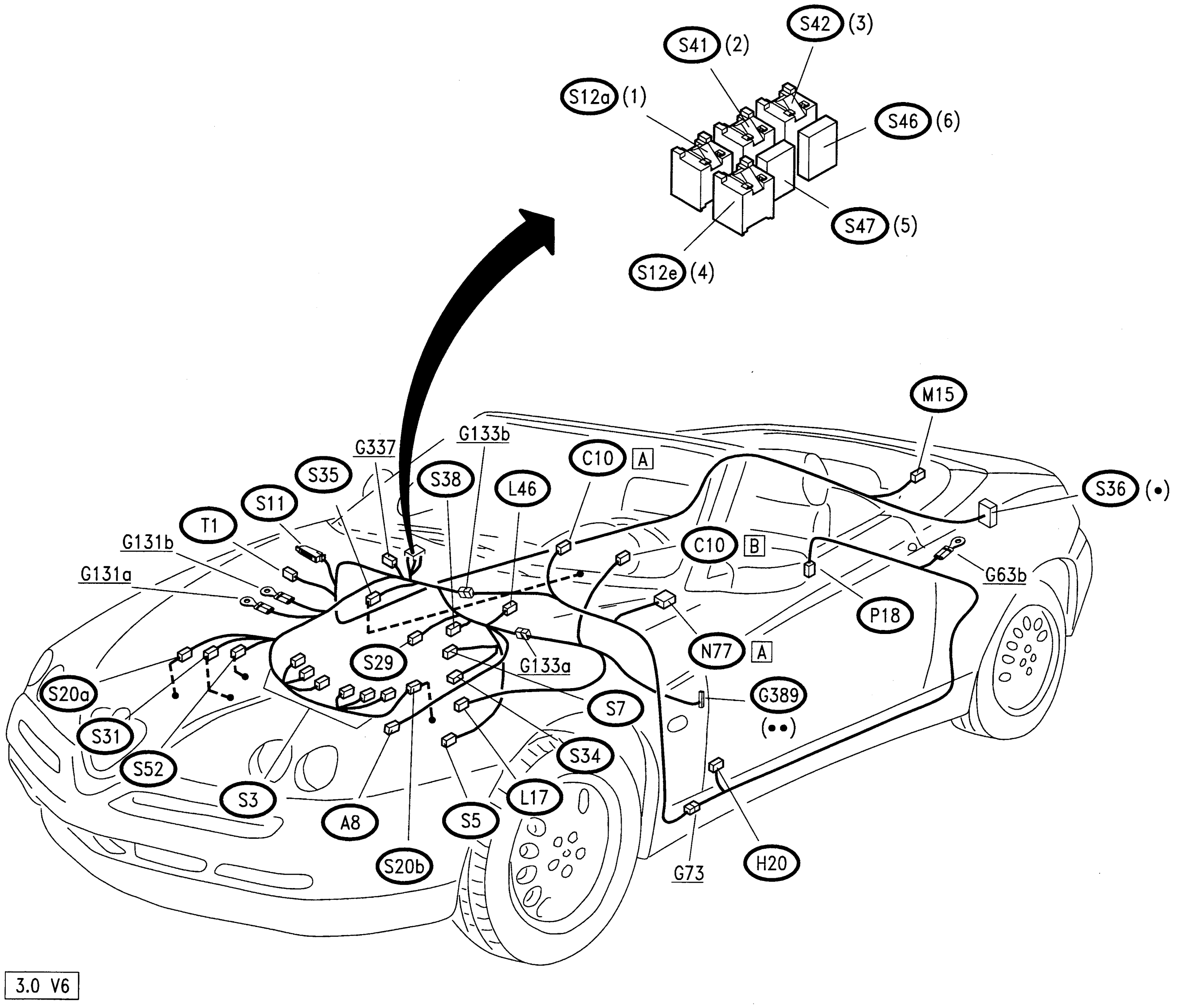

(•)	Black fuseholder		
(••)	Red fuseholder		
(1)	Black base	(4)	Black base
(2)	Grey base	(5)	Red fuseholder
(3)	Black base	(6)	Brown fuseholder

CHECKING COMPONENTS

Rpm sensor (S31)

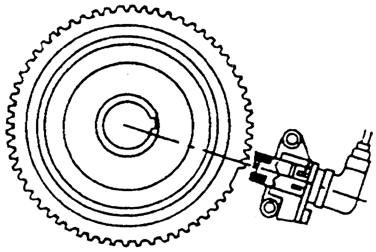

SPECIFICATIONS	
Sensor winding resistance 20 °C	~ 540 Ω
Gap between sensor and phonic wheel	0.5 ÷ 1.5 mm

Engine temperature sensor (S7)

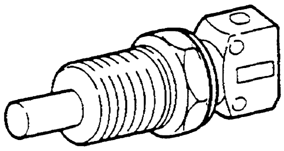

SPECIFICATIONS	
Temperature (°C)	Resistance (Ω)
- 10°C	8100 ÷ 10770 Ω
+ 20°C	2280 ÷ 2720 Ω
+ 80°C	292 ÷ 362 Ω

Intaken air temperature sensor (S34)

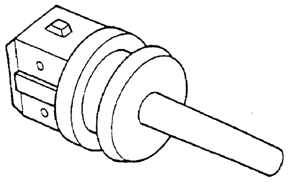

SPECIFICATIONS	
Temperature (°C)	Resistance (Ω)
- 10°C	8100 ÷ 10770 Ω
+ 20°C	2280 ÷ 2720 Ω
+ 80°C	292 ÷ 362 Ω

Air flow meter (S5)

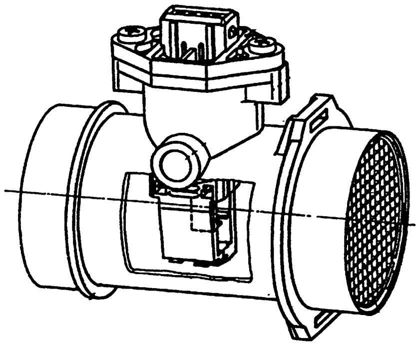

SPECIFICATIONS	
Current that crosses the diaphragm:	
flow rate (kg/h)	current (A)
0 640	≤ 0.25 ≤ 0.80

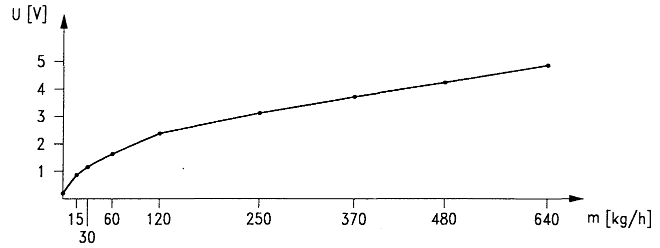

Characteristic curve of sensor
m = flow rate
U = voltage between pins 4 and 2

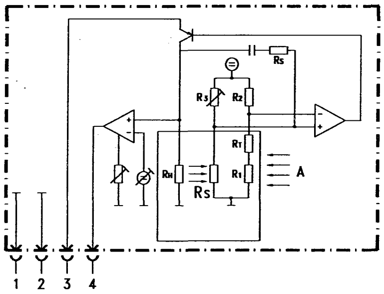

pin 1 - Earth
pin 2 - Reference earth
pin 3 - 12 V supply
pin 4 - Measurement signal
A = air
Rs = hot film sensor

Throttle position sensor (S38)

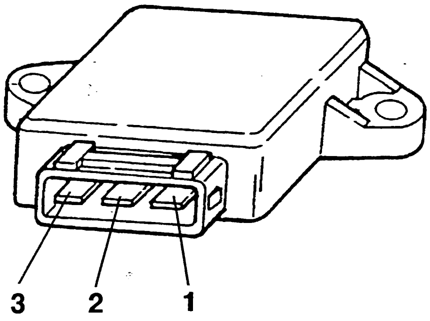

SPECIFICATIONS	
Resistance between terminals:	
1 - 2 (fixed)	~ 2 kΩ
1 - 3 (throttle closed)	~ 1 kΩ
1 - 3 (throttle completely open)	~ 2.7 kΩ

Cam angle sensor (S52)

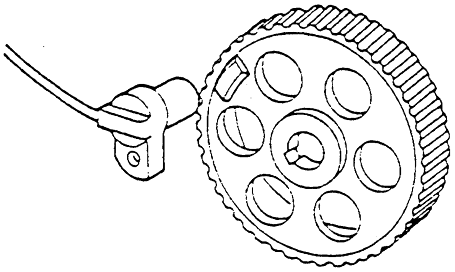

SPECIFICATIONS
The voltage signal "lowers" sharply when the tooth machined on the camshaft passes in front of the sensor itself:
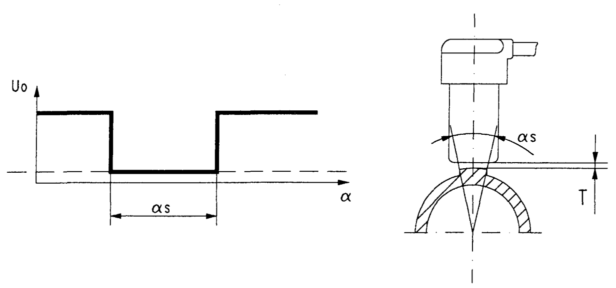
Gap T = 0.1 ÷ 1.5 mm

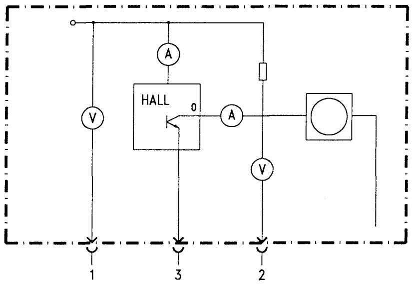

pin 1 - Supply
pin 2 - Signal output
pin 3 - Earth

Lambda probe (S35)

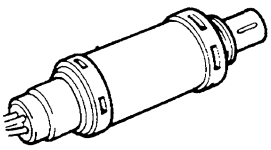

SPECIFICATIONS	
Heating resistance	3 Ω

Electroinjectors (S3)

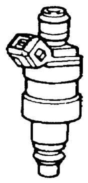

SPECIFICATIONS	
Winding resistance	15.9 ± 0.35 Ω

Fuel pump (P18)

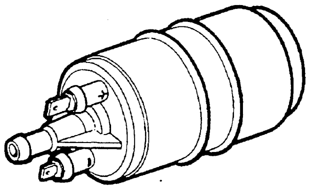

SPECIFICATIONS	
Flow rate	≥120 l/h
Pressure	4 bar
Nominal voltage	12V

Idle speed adjustment actuator S29

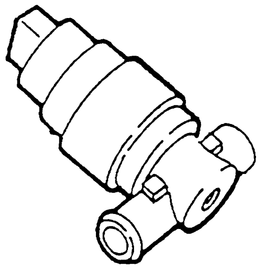

SPECIFICATIONS	
Resistance between terminals:	
1 - 3	~ 26 Ω
1 - 2	~ 13 Ω
2 - 3	~ 13 Ω

Ignition coil A8

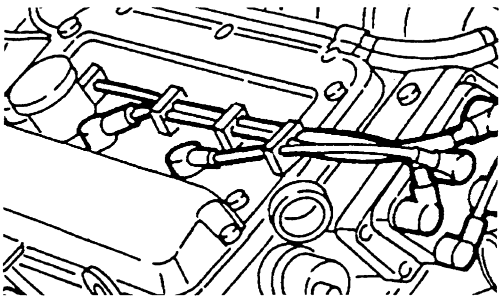

SPECIFICATIONS	
Primary resistance	0.5 Ω
Secondary resistance	13.3 kΩ

Evaporative solenoid valve M15

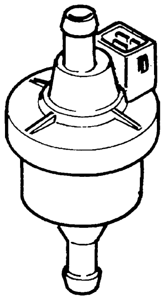

SPECIFICATIONS	
Duty-cycle signal	12 V; 10 Hz
Ohmic resistance of the winding	26 ± 4 Ω
When not energized the solenoid valve is normally closed	

Inertial switch H20

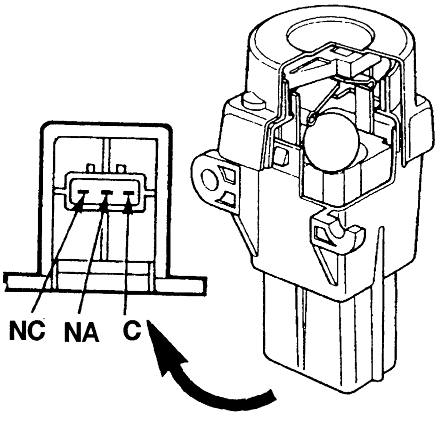

SPECIFICATIONS
Check the continuity between pins NC and C: this continuity is cut off in the event of a crash; the contact is re- connected by pressing the special pushbutton

E.G.R. Solenoid valve (L46)

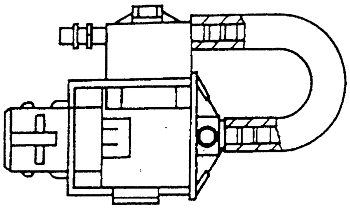

SPECIFICATIONS	
Duty cycle signal	12V; 15.3 Hz
Ohmic resistance of winding	~ 30Ω

Knock sensor (S20a) (S20b)

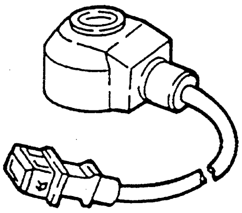

SPECIFICATIONS		
Resonance frequency		> 20 kHz
Impedance		≥ 1 MΩ
Vibration allowed	for long periods	≤ 80 g
	for short periods	≤ 40 g

FAULT-FINDING

The control unit possesses a self-diagnosis system which continuously monitors the signals leading from the different sensors for plausibility and compares them with the allowed limits: if these limits are exceeded the system detects a fault, memorizes it and turns on the warning light on the instrument cluster.

For certain parameters the control unit replaces the abnormal values with suitable mean values to enable the car to "limp" to a point of the Service Network.

These "recovery" values depend on the other correct signals and are defined each time by the operating logic of the control unit.

The self-diagnosis system also makes it possible to quickly and effectively locate faults by connection with the ALFA ROMEO TESTER, through which all the errors memorised may be "read". It is also possible to check the operating parameters recorded by the control unit and command the engagement of the single actuators to check whether they are working properly.

Diagnosis using the ALFA TESTER

N.B. Before carrying out diagnosis with the Tester, make the preliminary check given on the next page (**TEST A**).

The Tester and the control unit should be connected as follows:

1. Power the Tester either through the cigar lighter socket or connecting it directly to the battery using the special cable.
2. Connect the Tester socket to that of the control unit (the socket is to be found next to the control unit).

The Tester can give the following information:

- display of parameters;
- display of errors;
- active diagnosis.

Error clearing

Before ending diagnosis the contents of the "permanent" memory must be erased using the Tester in the Active Diagnosis mode.

PRELIMINARY CHECK OF THE BOSCH M3.7 SYSTEM — TEST A

NOTE: Check beforehand that the ALFA ROMEO CODE is working properly which might have cut off the supply to the system!

TEST PROCEDURE		RESULT	CORRECTIVE ACTION
A1	CHECK FUSE	OK ➡	Carry out **step A2**
	– Check intactness of fuses **S36**, **S46**, **S47** and **G389**	~~OK~~ ➡	Change fuses **S36**: 40A **S46**: 7.5A **S47** : 10A **G389** : 10A (from chassis no.____)
A2	CHECK VOLTAGE	OK ➡	Carry out **step A3**
	– Check for 12 V at pin 30 of relays **S41, S42** and **S12a** and also at pin 86 of **S41**	~~OK~~ ➡	Restore the wiring between the battery **A1** and relays **S41, S42** and **S12a**
A3	CHECK VOLTAGE	OK ➡	Carry out **step A4**
	– With the key turned, check for 12 V at pin 86 of relay **S42**	~~OK~~ ➡	Restore the wiring between the ignition switch **B1** and relay **S42** and from chassis no.____ through fuse **G389**
A4	CHECK RELAYS	OK ➡	Carry out **step A5**
	– Check the correct operation of relays **S41**, **S42** and **S12a**	~~OK~~ ➡	Change any faulty relays
A5	CHECK CONTROL UNIT SUPPLY	OK ➡	Carry out **step A6**
	– Check for 12 V at pin 26 of control unit **S11**; with the key turned 12 V also at pins 54 and 56 of **S11** and appr. 0 V (very low voltage) at pin 1 and 27 of **S11**	~~OK~~ ➡	Restore the wiring between the control unit **S11** and the relays and between the control unit and fuse **S46**
A6	CHECK EARTH	OK ➡	**CONTINUE DIAGNOSIS USING THE ALFA ROMEO TESTER**
	– Check for an earth at pins 6 and 34. Also check for an earth at pin 85 of **S42** and at pin 85 of **S12a**	~~OK~~ ➡	Restore the wiring between **S11** and the relays and earth **G131a**

ABS SYSTEM (BOSCH 2Si)

INDEX

WIRING DIAGRAM

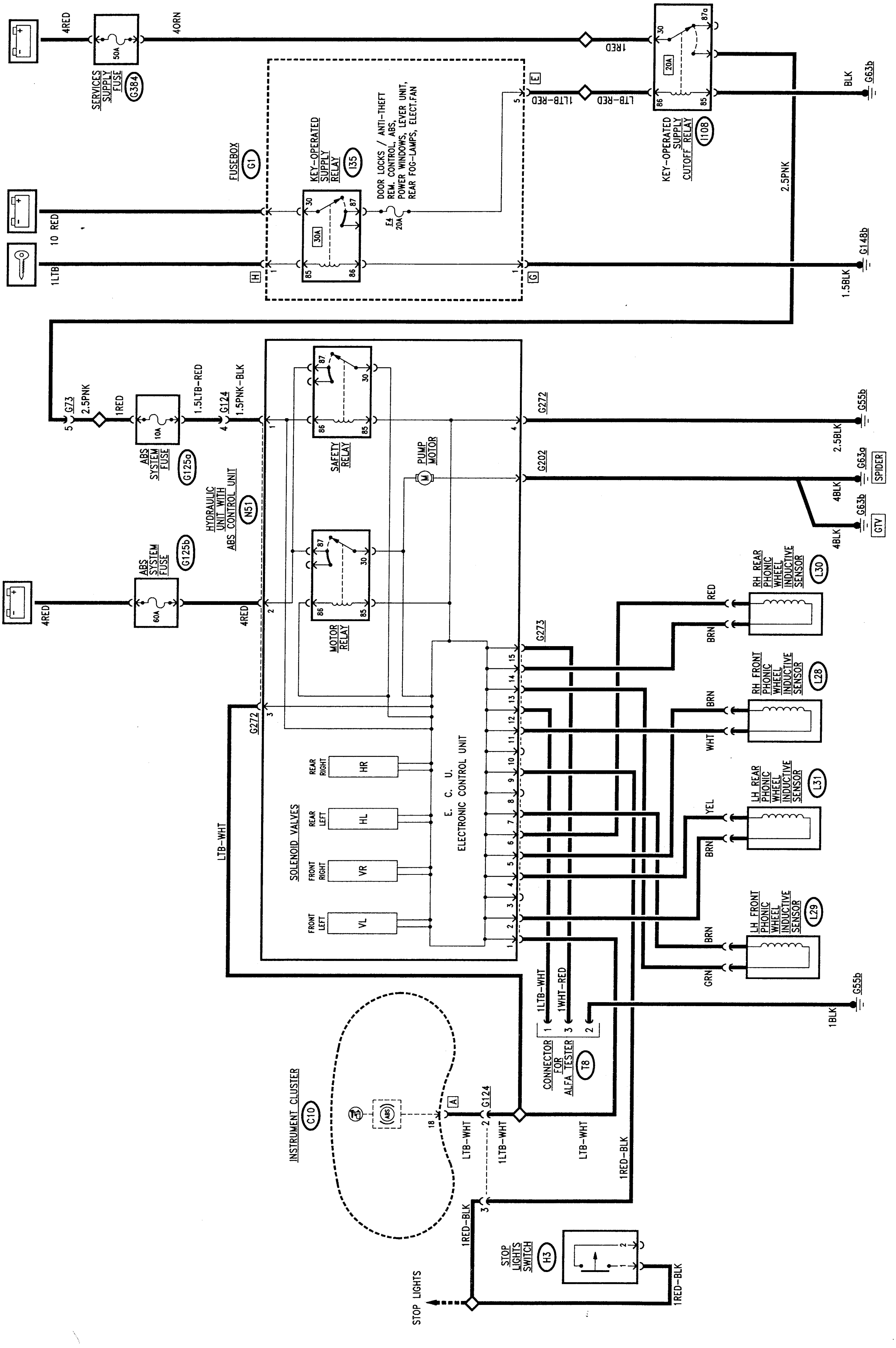

GENERAL DESCRIPTION

The car is equipped with an electronic wheel anti-lock system **(BOSCH 2Si)** which adjusts the braking pressure transmitted to the wheels preventing loss of road-holding under all tyre and road conditions.

The system has been designed to integrate, and not replace, the normal mechanical braking system, guaranteeing a high degree of safety in the event of a failure: in fact it operates on the same brake fluid as the conventional mechanical circuit.

Four sensors, located on the four wheels, inform the electronic control unit of the speed of each wheel continuously, thereby recording locking situations affecting the wheels, skidding and loss of grip.

In these situations, the control unit suitably operates the solenoid valves that modulate the pressure in the hydraulic circuit, eliminating wheel locking and bringing the car back to the limit of roadholding, which means that the braking distance is reduced to a minimum, without losing control of steering.

The **modulating solenoid valves** are, in this version of the system, four, one for each wheel.

Components

The system comprises:

- four magnetic induction sensors which read the speed of the wheels: **L28**; **L29**; **L30**; **L31**.
- the integrated electronic and hydraulic control unit **N51**, which houses the following:
  - the electronic control module (CPU)
  - the four solenoid valves
  - the brake fluid pump
  - a safety relay
  - a pump control relay
- the connector for self-diagnosis **T8**
- the brake switch **H3** (the same that turns on the stop lights) which signals the system the braking condition.

The ABS includes a self-diagnosis system which continually monitors all the system parameters and components: in the event of a failure or fault, the system cuts itself off automatically leaving the conventional servo-assisted mechanical braking system operational: the driver is alerted of this situation by a special warning light ABS on the instrument cluster **(C10)**.

Connecting to the diagnosis connector (**T8**) located next to the control unit, it is possible to use the signals of the "flashing code" to quickly locate the faulty component (see "Fault-finding").

The connector **T8** can also be used to connect to the ALFA ROMEO Tester.

FUNCTIONAL DESCRIPTION

System supply:

With a line protected by wander fuse **G125a** (10A) the key- operated voltage - leading from relay **I108** and from fuse **G384** - supplies pin 1 of connector **G272** of the ABS hydraulic unit **N51**, and from here it supplies the safety relay and energizes the coil: this way the relay supplies with battery voltage -leading from pin 2 of **G272** and from the line protected by fuse **G125b** (60A) - the electronic module and the coil of the engine relay: following a command from the electronic module, this operates the pump motor which delivers the pressure of the brake fluid to the wheels.

The electronic module and relays are earthed by pin 4 of connector **G272**, while the pump is earthed by connector **G202**.

Sensors and solenoid valves:

Directly inside the control unit **N51**, the module is connected with three adjustment solenoid valves, which modulate the pressure on the brakes of the four wheels; outside, through connector **G273**, it is connected with the four sensors **L28 - L29 - L30 - L31** which signal the speed of the single wheels, and with the brake switch **H3**, which sends a consent signal: in fact the ABS system cannot come into operation if the brake pedal is not pressed.

Self-diagnosis:

When the control unit detects problems through the self- diagnosis function, it sends a signal to the instrument cluster **C10** which turns on the ABS warning light: this signal depends on a failure of the electronic module -pin 1 of connector **G273**- or on the hydraulic control - pin 3 of **G272**. The diagnosis connector **T8**, allows connection of the control unit with the ALFA ROMEO Tester or "reading" of the flashing code (see "Fault-finding").

LOCATION OF COMPONENTS

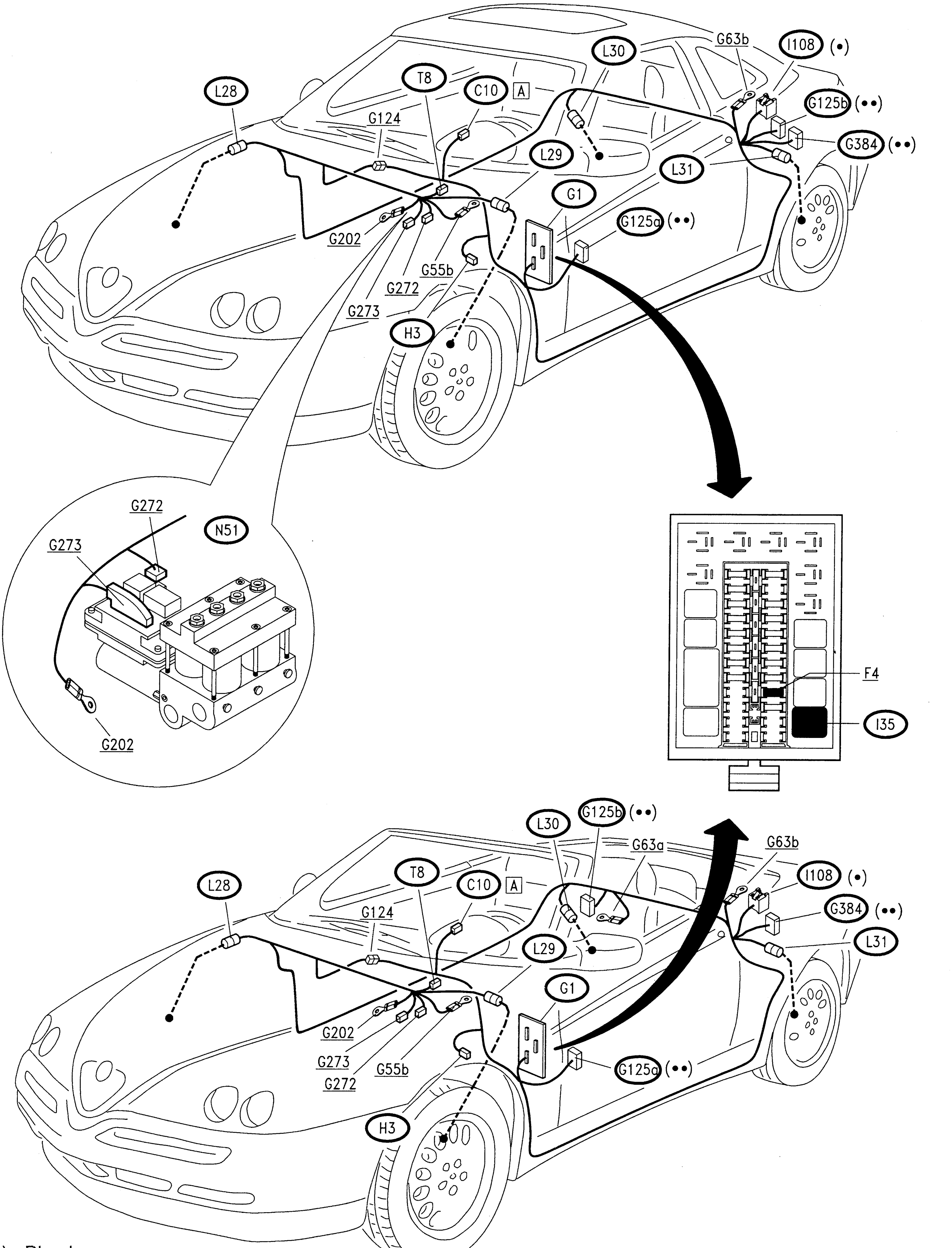

(•) Blue base
(••) Black fuseholder

FAULT-FINDING

AUTOMATIC CHECK UPON IGNITION: when the car is started the "ABS warning light" on the instrument cluster turns on for appr. 2 secs., then it goes off meaning that the system is working properly. If the warning light stays on, carry out diagnosis using the flashing code, as mentioned previously.

If the warning light does not turn on, carry out **test J.**

Fault-Finding using the Flashing Code

The self-diagnosis system with which this system is fitted, makes it possible to quickly locate a faulty component following the instructions of a **FLASHING CODE**, which is activated as follows:

- earth the line of pin 1 of connector **T8**
- power the ABS control unit **N51** ("key-operated" supply")

Read the sequence of flashes on the "ABS warning light" on the instrument panel **C10**:

- for three times code "12" appears, meaning correct operation: if this does not occur, carry out **test J**
- the codes of the errors memorised appear (each repeated three times): carry out the test given in the following table
- code "12" appears for another three times, indicating the end of the sequence

NOTE: Resetting the memorised code is obtained by disconnecting the line of pin 1 of **T8** and engaging the ignition switch 20 times (or using the ALFA ROMEO Tester)

Error Codes Table

CODE	FAULT	CARRY OUT TEST
12	Start and end of diagnosis	—
No code (*)	Control unit and self-diagnosis fault	**A**
16	Faulty LH front solenoid valve (VL)	Check the impedance of the solenoid valve (1.5÷2.5 Ω) and the condition of the connections between the control unit and the solenoid valve; if necessary change the solenoid valve
17	Faulty RH front solenoid valve (VR)	Check the impedance of the solenoid valve (1.5÷2.5 Ω) and the condition of the connections between the control unit and the solenoid valve; if necessary change the solenoid valve
19	Faulty safety relay	**B**
25	Incorrect number of phonic wheel teeth	Change the phonic wheel concerned see Group 33 "BRAKES")
26	Faulty LH rear solenoid valve (HL)	Check the impedance of the solenoid valve (1.5÷2.5 Ω) and the condition of the connections between the control unit and the solenoid valve; if necessary change the solenoid valve
27	Faulty RH rear solenoid valve (HR)	Check the impedance of the solenoid valve (1.5÷2.5 Ω) and the condition of the connections between the control unit and the solenoid valve; if necessary change the solenoid valve
35	Faulty pump motor	**C**
37	Faulty brake switch (**H3)**	D
39	Faulty LH front sensor (**L29**)	Check the impedance of the sensor (appr.1 kΩ); change it if necessary. Then carry out the next **test E.**
41	LH front sensor (**L29**) not connected	**E**
42	Faulty RH sensor (L28)	Check the impedance of the sensor (appr. 1kΩ); change it if necessary. Then carry out the next **test F.**
43	RH front sensor (**L28**) not connected	**F**
44	Faulty LH rear sensor (L31**)**	Check the impedance of the sensor (appr. 1kΩ); change it if necessary. Then carry out the next **test G.**
45	LH rear sensor (**L31**) not connected	**G**
46	Faulty RH rear sensor (**L30**)	Check the impedance of the sensor (appr. 1kΩ); change it if necessary. Then carry out the next **test H.**
47	RH rear sensor (**L30**) not connected	**H**
48	Insufficient supply voltage	**I**
55	Faulty electronic control unit	Change the control unit, contained in **N51**
56	Operating error in diagnosis	-

(*) if the warning light is not working, see **test J**

Fault-finding using the Alfa Romeo Tester

N.B. Before carrying out diagnosis with the Tester, perform the preliminary check described later (TEST A); if the warning light is not working properly also carry out TEST J.

The connection between the TESTER and the control unit must be made as follows:

1. Supply the TESTER either through the cigar lighter socket or connecting directly to the battery using the special lead.
2. Connect the TESTER socket to the control unit (the socket is near the control unit).

The instrument can give the following information:

- parameter display;
- error display;
- active diagnosis.

ERROR STORAGE:

The control unit self-diagnosis system checks a series of components, checking the operating parameters and logging any faults permanently in the control unit; in this situation the control unit de-activates the system and turns on the warning light on the instrument panel.

N.B. the control unit can memorise up to three errors contemporaneously: if a failure is present when three more are memorised, the last one supersedes the "oldest" of the three previous ones.

ERROR CLEARING:

Stored errors may only be cleared SOLELY using the ALFA ROMEO TESTER.

ACTIVATING DIAGNOSIS:

Diagnosis begins with the engine stopped and the ignition key turned to MARCIA.

N.B.: During diagnosis it will also be requested to set the car in motion. Under this circumstance system is disabled and the warning light on the instrument cluster stays on; therefore, the control unit is unable to memorise new errors. Great care is also necessary because in the event of emergency braking, the ABS system is not operational and only the conventional braking system is available.

N.B.:
The system is disabled when the supply voltage falls below 8.6 V, when the solenoid valves are not energized or 9.4 V, when the solenoid valves are energized.

PRELIMINARY SYSTEM CHECK	TEST A

TEST PROCEDURE		RESULT	CORRECTIVE ACTION
A1	CHECK FUSES – Check the intactness of wander fuses **G125a** and **G125b**	OK ▶	Carry out **step A2**
		~~OK~~ ▶	Change fuses - **G125a** (10A) - **G125b** (60A)
A2	CHECK RELAYS – Check the two relays in unit **N51**	OK ▶	Carry out **step A3**
		~~OK~~ ▶	Change the relays if faulty
A3	CHECK VOLTAGE – Check for 12 V at pin 2 of **G272**	OK ▶	Carry out **step A4**
		~~OK~~ ▶	Restore the wiring between pin 2 of **G272** and branch terminal board **G56**
A4	CHECK VOLTAGE – Turn the key and check for 12 V at pin 1 of **G272**	OK ▶	Carry out **step A5**
		~~OK~~ ▶	Restore the wiring between pin 1 of **G272** and the fuse box **G1,** through fuse **G125a**, and relay **I108**
A5	CHECK EARTH – Check that **G202** is earthed	OK ▶	Carry out **step A6**
		~~OK~~ ▶	Restore the wiring between **G202** and earth **G63**
A6	CHECK EARTH – Check that pin 4 of **G272** is earthed	OK ▶	CONTINUE DIAGNOSIS USING THE ALFA ROMEO TESTER OR USING THE FLASHING CODE
		~~OK~~ ▶	Restore the wiring between pin 4 of **G272** and earth **G55b**

FAULTY SAFETY RELAY	TEST B

TEST PROCEDURE		RESULT	CORRECTIVE ACTION
B1	CHECK RELAY – Check that the safety relay is working properly (in group **N51**)	OK ▶	Carry out **step B2**
		~~OK~~ ▶	Change the relay
B2	CHECK VOLTAGE – Check for 12 V at pin 87 of the safety relay	OK ▶	Carry out **step B3**
		~~OK~~ ▶	In this case breaks of the connection between **G272** and the safety relay are likely. Change group **N51**
B3	CHECK VOLTAGE – Turn the key and check for 12 V at pin 86 of the safety relay	OK ▶	Carry out **step B4**
		~~OK~~ ▶	In this case breaks of the connection between **G272** and the safety relay are likely. Change group **N51**
B4	CHECK VOLTAGE – Turn the key and check for 12V at pin 86 of the motor relay	OK ▶	Change the motor relay (also see **test C**)
		~~OK~~ ▶	Change group **N51**

FAULTY PUMP MOTOR — TEST C

TEST PROCEDURE		RESULT	CORRECTIVE ACTION
C1	CHECK RELAY – Check the correct operation of the motor relay (in group **N51**)	OK ▶	Carry out **step C2**
		~~OK~~ ▶	Change the relay, contained in **N51**
C2	CHECK VOLTAGE – Check for 12 V at pin 87 of the motor relay	OK ▶	Carry out **step C3**
		~~OK~~ ▶	In this case breaks are likely in the connection between **G272** and the motor relay. Change group **N51**
C3	CHECK VOLTAGE – Turn the key and check for 12 V at pin 86 of the motor relay	OK ▶	Carry out **step C4**
		~~OK~~ ▶	Check the safety relay (see **test B**). If not, breaks are likely in the connection between the safety relay and the motor relay. Change group **N51**
C4	CHECK EARTH – Check for 0 V at pin (-) of the pump motor	OK ▶	Carry out **step C5**
		~~OK~~ ▶	In this case breaks are likely in the connection between pin (-) of the pump motor and **G202**. Change group **N51**
C5	CHECK PUMP – Bridge pins 30 and 87 of the motor relay. Check that the pump motor is working properly	OK ▶	If necessary , check the brake hydraulic circuit. (see Group 33 "BRAKES")
		~~OK~~ ▶	Change group **N51**, complete with pump motor

FAULTY BRAKE SWITCH

TEST D

TEST PROCEDURE		RESULT	CORRECTIVE ACTION
D1	CHECK STOP LIGHTS	OK ▶	Carry out **step D2**
	– Check that the stop lights are working properly	~~OK~~ ▶	Change the stop lights switch **H3**, or proceed as described in the "STOP LIGHTS" section
D2	CHECK VOLTAGE	OK ▶	Check and if necessary change the electronic control unit contained in **N51**
	– With the pedal pressed, check for 12 V at pin 9 of **G273**	~~OK~~ ▶	Restore the wiring between pin 9 of **G273** and **H3**

LH FRONT SENSOR NOT CONNECTED

TEST E

TEST PROCEDURE		RESULT	CORRECTIVE ACTION
E1	CHECK OPEN CIRCUIT	OK ▶	Carry out **step E2**
	– Turn the key and check for an open circuit between pins 7 and 13 of **G273**	~~OK~~ ▶	Carry out **step E3**
E2	CHECK CONTINUITY	OK ▶	Check and if necessary change the sensor **L29**.
	– Disconnect the sensor **L29** and check for continuity between the sensor and pin 7 of **G273** , and between the sensor and pin 13 of **G273**	~~OK~~ ▶	Restore the wiring between **L29** and **G273**
E3	CHECK OPEN CIRCUIT	OK ▶	Check and if necessary change sensor **L29**.
	– Disconnect the sensor **L29** and check for an open circuit between pins 7 and 13 of **G273** (wiring side)	~~OK~~ ▶	Restore the wiring eliminating the short circuit between the cables connecting **L29** with **G273**

RH FRONT SENSOR NOT CONNECTED — TEST F

TEST PROCEDURE		RESULT	CORRECTIVE ACTION
F1	CHECK OPEN CIRCUIT	OK ▶	Carry out **step F2**
– Turn the key and check for an open circuit between pins 5 and 11 of **G273**		~~OK~~ ▶	Carry out **step F3**
F2	CHECK CONTINUITY	OK ▶	Check and if necessary change the sensor **L28.**
– Disconnect the sensor **L28** check for continuity between the sensor and pin 5 of **G273,** and between the sensor and pin 11 of **G273**		~~OK~~ ▶	Restore the wiring between **L28** and **G273**
F3	CHECK OPEN CIRCUIT	OK ▶	Check and if necessary change the sensor **L28.**
– Disconnect the sensor **L28** and check for an open circuit between pins 5 and 11 of **G273** (wiring side)		~~OK~~ ▶	Restore the wiring eliminating the short circuit between the cables connecting **L28** with **G273**

LH REAR SENSOR NOT CONNECTED — TEST G

TEST PROCEDURE		RESULT	CORRECTIVE ACTION
G1	CHECK OPEN CIRCUIT	OK ▶	Carry out **step G2**
– Turn the key and check for an open circuit between pins 4 and 2 of **G273**		~~OK~~ ▶	Carry out **step G3**
G2	CHECK CONTINUITY	OK ▶	Check and if necessary change the sensor **L31.**
– Disconnect the sensor **L31** and check for continuity between the sensor and pin 4 of **G273,** and between the sensor and pin 2 of **G273**		~~OK~~ ▶	Restore the wiring between **L31** and **G273**
G3	CHECK OPEN CIRCUIT	OK ▶	Check and if necessary change the sensor **L31.**
– Disconnect the sensor **L31** and check for an open circuit between pins 4 and 2 of **G273** (wiring side)		~~OK~~ ▶	Restore the wiring eliminating the short circuit between the cables connecting **L31** with **G273**

RH REAR SENSOR NOT CONNECTED — TEST H

TEST PROCEDURE		RESULT	CORRECTIVE ACTION
H1	CHECK OPEN CIRCUIT	OK ▶	Carry out **step H2**
– Turn the key and check for an open circuit between pins 6 and 14 of **G273**		~~OK~~ ▶	Carry out **step H3**
H2	CHECK CONTINUITY	OK ▶	Check and if necessary change the sensor **L30**.
– Disconnect the sensor **L30** and check for continuity between the sensor and pin 6 of **G273** , and between the sensor and pin 14 of **G273**		~~OK~~ ▶	Restore the wiring between **L30** and **G273**
H3	CHECK OPEN CIRCUIT	OK ▶	Check and if necessary change the sensor **L30.**
– Disconnect the sensor **L28** and check for an open circuit between pins 6 and 14 of **G273** (wiring side)		~~OK~~ ▶	Restore the wiring eliminating the short circuit between the cables connecting **L30** with **G273**

INSUFFICIENT SUPPLY VOLTAGE — TEST I

TEST PROCEDURE		RESULT	CORRECTIVE ACTION
I1	CHECK VOLTAGE	OK ▶	Carry out **step I2**
– Check that the battery voltage is 12V		~~OK~~ ▶	Restore the correct voltage recharging or changing the battery **A1**
I2	CHECK VOLTAGE	OK ▶	Carry out **step I3**
– Check for a voltage of 12 V at pin 2 of **G272**		~~OK~~ ▶	Restore the wiring between pin 2 of **G272** and the battery **A1**, through fuse **G125b**
I3	CHECK VOLTAGE	OK ▶	CONTINUE DIAGNOSIS USING THE ALFA ROMEO TESTER
– With the key turned, check for a voltage of 12 V at pin 1 of **G272**		~~OK~~ ▶	Restore the wiring between pin 1 of **G272** and the fusebox **G1,** through fuse **G125a**, and relay **I108**

"ABS" WARNING LIGHT NOT WORKING (fails to turn on for faults) | TEST J

TEST PROCEDURE	RESULT	CORRECTIVE ACTION
J1 CHECK CONTINUITY – Check the continuity between pin 12 of **G273** and pin 3 of connector **T8** and between pin 15 of **G273** and pin 1 of **T8**	OK ▶ ~~OK~~ ▶	Carry out **step J2** Restore the wiring between **G273** and connector **T8**
J2 CHECK EARTH SIGNAL – Turn the key and check for, 0V for a few seconds at pin B3 of the instrument cluster **C10**	OK ▶ ~~OK~~ ▶	Change the instrument cluster **C10** Carry out **step J3**
J3 CHECK EARTH SIGNAL – Turn the key and check for, 0V for a few seconds at pin 1 of **G273**	OK ▶ ~~OK~~ ▶	Restore the wiring between **G273** and **C10** Also check the wiring between pin 3 of **G272** and **C10** Change the control unit contained in **N51**

KEY TO COMPONENTS

A	**STARTING - RECHARGING**
A1	Battery
A3	Alternator, with integrated voltage regulator
A8	Ignition coil
A8a	Ignition coil A
A8b	Ignition coil B
A11	Starter motor
A12	Spark plugs

B	**MANUAL ELECTRICAL CONTROLS**
B1	Ignition switch
B9	Heated rearscreen control switch
B10	Fog lights control switch
B11	Rear fog guards control switch
B12	Hazard warning lights control switch
B16	Instrument panel light dimmer button
B21a	Right front power window control switch (on RH door)
B21b	Right front power window control switch (on LH door)
B36	Wing mirror control switch
B40	Trip meter reset switch
B47	Sun roof motor control switch
B53	Front power window switch with automatic mechanism
B61	Fuel flap opening switch
B68	Steering column lever unit
B69	Headlamp aiming device
B87	Luggage compartment opening switch with glove box light
B98	Air recirculation switch
B99	Hood release switch
B100	Hood cover release switch
B101	Automatic hood control switch

C	**INSTRUMENTATION**
C10	Instrument cluster
C18	Auxiliary instrument cluster

D	**WARNING LIGHTS**
D31	Anti-theft device led indicator
D43	Signalling led for automatic hood

E	**EXTERIOR LIGHTS**
E1a	LH front direction indicator bulb
E1b	RH front direction indicator bulb
E2a	LH front side light bulb
E2b	RH front side light bulb
E5a	LH low beam light bulb
E5b	RH low beam light bulb
E7a	LH high beam light bulb
E7b	RH low beam light bulb
E9a	LH direction indicator light bulb
E9b	RH direction indicator light bulb
E10a	LH fog light bulb
E10b	RH fog light bulb
E17a	LH number plate light bulb
E17b	RH number plate light bulb
E19	RH tail light cluster
E20	LH tail light cluster
E28	Third stop light
E30	Rear RH fog guard/reversing light
E31	Rear LH fog guard/reversing light

F	**INTERIOR LIGHTS**
F3	Passenger compartment ceiling light
F5	Luggage compartment light
F8a	Heating/ventilation controls light bulb a
F8b	Heating ventilation controls light bulb b
F23	RH foot well light
F24	LH foot well light
F45	Light on LH front door
F46	Light on RH front door

G	**FUSEBOX - CONNECTORS - EARTHS**
G1	Fusebox
G3	Fusebox terminal connector
G4	Free fuse
G21	Connector for RH front door wiring
G23	Connector for LH front door wiring
G38	Air conditioner wiring connector
G43	Connector for heating and ventilation control wiring
G53a	RH engine compartment earth
G53b	LH engine compartment earth
G55b	LH side panel earth
G56	Branch terminal board
G60	Injection wiring earth
G63a	RH rear earth
G63b	LH rear earth
G65	Coaxial cable for aerial
G73	Connector for rear services
G73b	Connector for rear services
G84	Console wiring connector
G92	Luggage compartment earth
G99	Connector for dashboard wiring/engine wiring
G115	Connector for tow bar trailer socket
G124	ABS system connector
G125a	ABS system fuse
G125b	ABS system fuse
G131	Earth on upper cover
G133a	Connector for electronic injection wiring A
G133b	Connector for electronic injection wiring B
G148b	Earth under dashboard LH
G193	Connector for electric aerial wiring
G202	Connector for ABS system earth
G219	Connector for sun roof
G254	Fuse for engine fan
G255	Fuse for heating and ventilation fan
G261	Fuse for sun roof
G272	Connector for ABS hydraulic unit
G273	ABS control unit connector
G308	Connector for engine sensors
G310	Fuse for RH front power window
G311	Fuse for LH front power window
G313	Connector for additional conditioner wiring

G314a	Connector for engine wiring / conditioner wiring A
G314b	Connector for engine wiring / conditioner wiring B
G320	Connector for rear loudspeaker cables
G337	Connector for conditioner syst./injection syst.
G380	Airbag connector
G380a	Airbag connector
G381	Earth for airbag
G383	Connector for airbag capsule
G384	Services supply fuse
G385	Connector for wiring in front bumper
G389	Fuse for ALFA ROMEO CODE unit
G391	Rear fog guard fuse
G399	Dashboard connector for automatic hood
G400	Rear connector for automatic hood
G401	Fuse for automatic hood system
G402	Fuse for automatic hood control unit
G403	Fuse for automatic hood switch
G404	Fuse for automatic hood switch
G405	Automatic hood power window opening fuse
G406	Automatic hood power window closing fuse
H	**SWITCHES**
H1	Handbrake switch
H2	Reversing light switch
H3	Stop lights switch
H9	RH front brake pad switch
H10	LH front brake pad switch
H17	Brake fluid minimum level switch
H20	Inertial switch
H24	Luggage compartment light switch
H44	Bonnet anti-theft device switch
H51	Sun roof stroke limit switch
H55a	RH hood closing switch
H55b	LH hood closing switch
H56a	RH hood cover closing switch
H56b	LH hood cover closing switch
H57	"5th arc" raised switch
H58	Intermediate "5th arc" switch
H59	Hood cover raised switch
H60	Hood position switch
I	**RELAYS**
I2	Heated rearscreen relay
I3	Horn relay
I17	Fog light relay
I26	Ceiling light relay
I29	Fuel pump relay
I35	Key-operated supply relay
I49	Low beam relay
I50	High beam relay
I52	Luggage compartment opening relay
I53	Fuel flap opening relay
I58	Sun roof relay
I64	Side lights relay
I99	Engine cooling fan 1st speed relay
I99a	Engine cooling fan 1st speed relay
I99b	Engine cooling fan 1st speed relay
I100	Engine cooling fan 2nd speed relay
I106	Hood release relay
I106b	Hood emergency release relay
I107a	Hood cover release relay
I107b	Hood cover release relay
I108	Key-operated supply cutoff relay
I109	Anti-theft switch relay
I112a	RH hood closing relay
I112b	LH hood closing relay
I113	Hood cover closing relay
I114a	LH power window opening relay
I114b	RH power window closing relay
I115a	LH power window closing relay
I115b	RH power window closing relay
I116	Automatic hood control relay
I117	Automatic hood electric pump relay
L	**SENDERS**
L2	Minimum engine oil pressure
L9	Sender for fuel level gauge
L10	Sender for engine coolant temperature gauge and max. temperature warning light contact
L17	Speedometer sensor
L28	RH front phonic wheel inductive sensor
L29	LH front phonic wheel inductive sensor
L30	RH rear phonic wheel inductive sensor
L31	LH rear phonic wheel inductive sensor
L33	Two-level thermal contact
L46	E.G.R. solenoid valve
M	**ELETTROMAGNETS - SOLENOID VALVES**
M12	Luggage compartment opening actuator electromagnet
M13	Fuel flap opening actuator electromagnet
M15	Evaporation solenoid valve
M26a	LH hood release actuator electromagnet
M26b	RH hood release actuator electromagnet
M27	Hood cover release actuator electromagnet
M27a	LH hood cover release actuator electromagnet
M27b	RH hood cover release actuator electromagnet
M28	Automatic hood solenoid valve
N	**ELECTRONIC DEVICES - INTERMITTENCES- TIMERS**
N11	Door locking control unit
N13	Hazard warning lights and direction indicators intermittence
N14	Electronic windscreen wiper intermittence
N18	Electronic headlamp switching device
N25	Rear fog guard electronic device
N38	Power window control unit
N45	Anti-theft device control unit
N51	Hydraulic unit with ABS control unit
N53	Anti-disturbance condenser on luggage compartment light
N60	Sun roof control unit
N67	Remote control signal receiver
N77	ALFA ROMEO CODE control unit
N78	ALFA ROMEO CODE receiver
N79	Car radio supply antidisturbance condenser
N80	Hood cover release timer

O	**SERVICES**
O1	Heated rearscreen
O2a	High tone horn
O2b	Low tone horn
O3	Aerial
O4	Car radio
O5a	RH front loud-speaker
O5b	LH front loud-speaker
O5c	RH rear loud-speaker
O5d	LH rear loud-speaker
O6	Cigar lighter - current socket
O18	RH wing mirror defroster
O19	LH wing mirror defroster
O22a	Additional engine fan resistance
O22a	Additional engine fan resistance
O31a	RH Tweeter loud-speaker
O31b	LH Tweeter loud-speaker
O37	Rear subwoofer speaker

P	**ELECTRIC MOTORS**
P2	Engine cooling fan
P2a	Engine cooling fan
P2b	Engine cooling fan
P8	LH wing mirror motor
P9	RH wing mirror motor
P10	Front RH door lock motor
P11	Front LH door lock motor
P14	Front RH power window motor
P15	Front LH power window motor
P18	Electric fuel pump
P19	Windscreen and rearscreen washer pump
P24	Sun roof motor
P27	Windscreen wiper motor with control unit
P35a	RH headlamp aiming motor
P35b	LH headlamp aiming motor
P51	Automatic hood control pump

Q	**HEATING/VENTILATION - AIR CONDITIONING**
Q1	Heater fan
Q4	Heater fan control
Q5	Heater fan speed adjustment resistance
Q9	Minimum pressure switch
Q11	Compressor electromagnetic coupling
Q15	Heating and ventilation fan relay
Q20	Min. and max. sensor pressure contact (Trinary)
Q22	Electromagnetic coupling relay
Q27	Air recirculation flap control motor
Q32	Auxiliary relay for heating and ventilation
Q39	Fuse for conditioning system (30A)
Q40	Fuse for conditioning system (15A)
Q41	Set of relay and fuses for air conditioner
Q42	Conditioner fan delay device
Q65	Fuse for conditioning system
Q68	Compressor and air recirculation engagement switches
Q69	Heater fan 1st speed relay

R	**SAFETY DEVICES**
R22	Airbag control unit
R23	Capsule on steering wheel for airbag
R27	Passenger's side airbag capsule
R28	Capsule on RH pretensioner
R29	Capsule on LH pretensioner

S	**ELECTRONIC INJECTION**
S3	Elettroinjectors
S5	Air flow meter
S7	Engine temperature sensor
S11	Motronic control unit
S12a	Motronic fuel pump relay
S12c	Phase variator relay
S12e	Air flow meter relay
S15	Phase variator
S20	Pinging sensor
S20a	Pinging sensor a
S20b	Pinging sensor b
S29	Idle adjustment actuator
S31	Rpm and crankshaft position sensor
S34	Air temperature sensor
S35	Heated lambda probe
S36	Fuse for injection relay
S38	Sensor on throttle body
S41	Main relay
S42	Secondary relay
S43	Absolute pressure sensor
S45	Lambda probe fuse
S46	Fuse for Motronic supply
S47	Fuse for fuel pump
S52	Cam angle sensor

T	**DIAGNOSIS**
T1	Connector for ALFA TESTER (Motronic and ALFA ROMEO CODE)
T3	Connector for ALFA TESTER (airbag)
T7	Connector for ALFA TESTER (anti-theft device)
T8	Connector for ALFA TESTER (ABS)
T13	Diagnosis connector for ALFA ROMEO TESTER (automatic hood)

COMPONENTS AND CONNECTORS

Battery (A1)

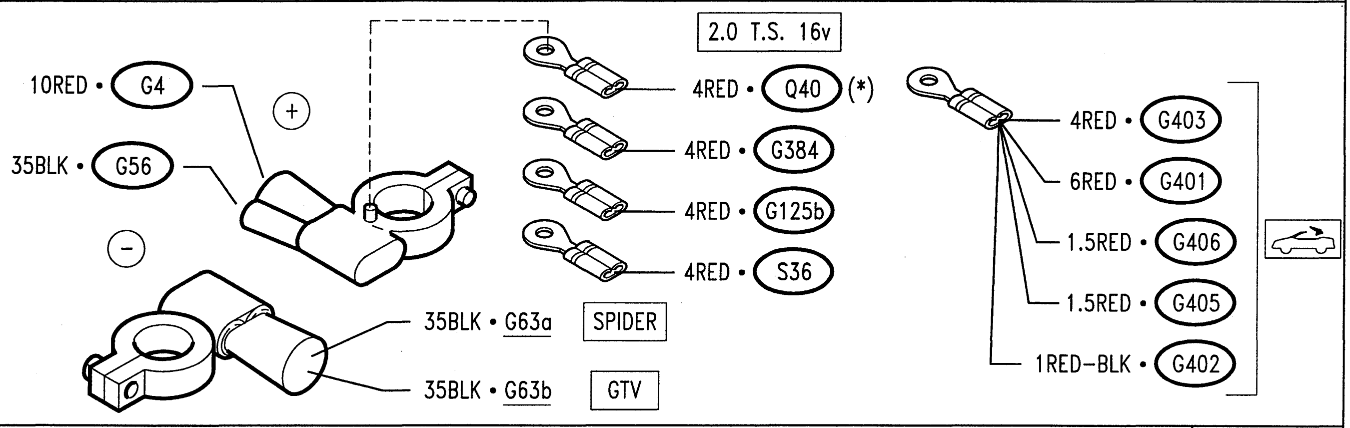

Alternator, with integrated voltage regulator (A3)

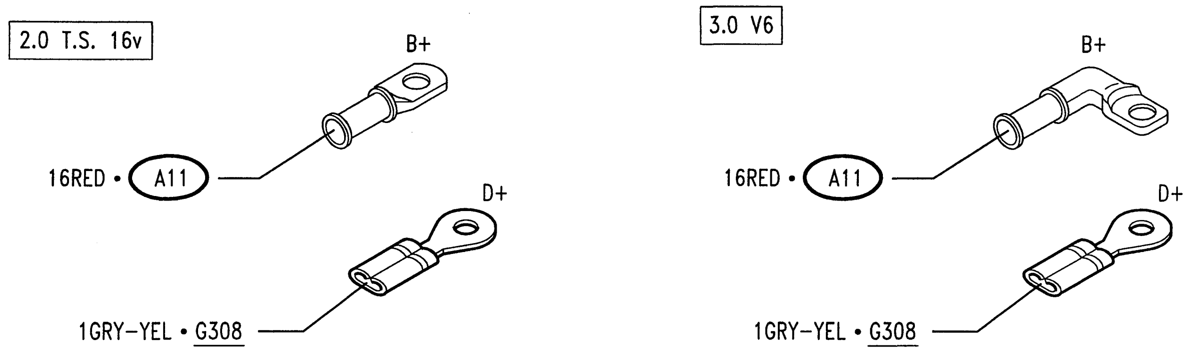

Ignition coil (A8)

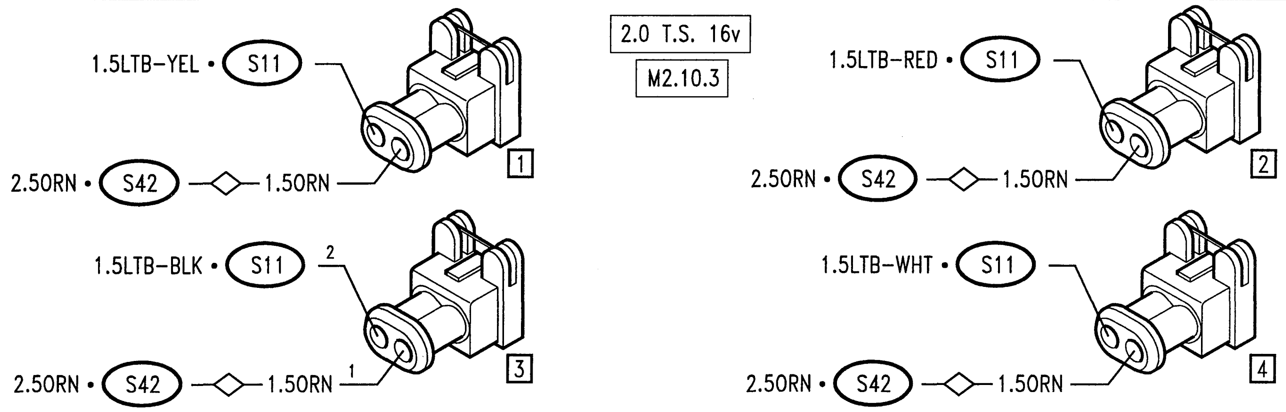

Ignition coil (A8)

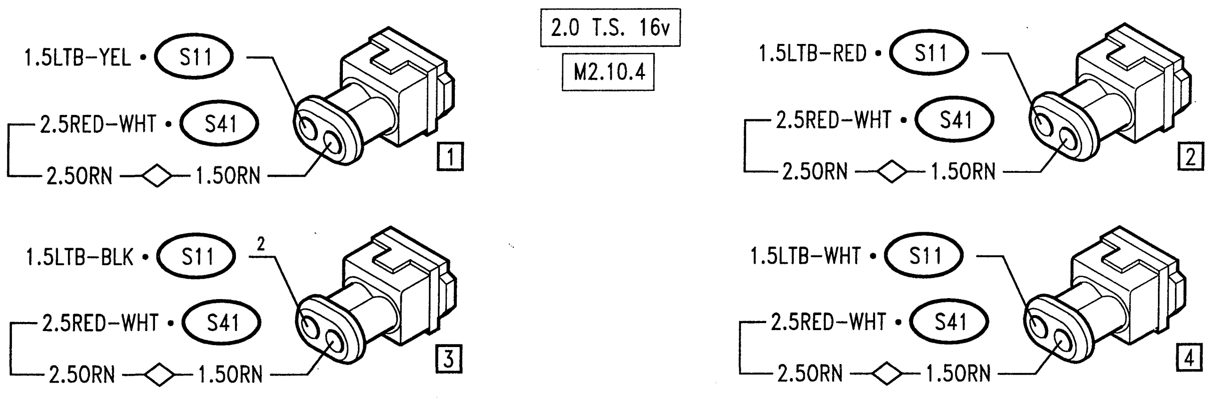

(*) from chassis no___

Ignition coil A8

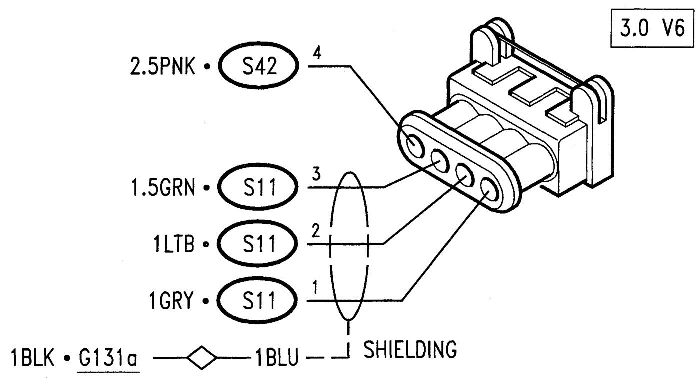

Starter motor A11

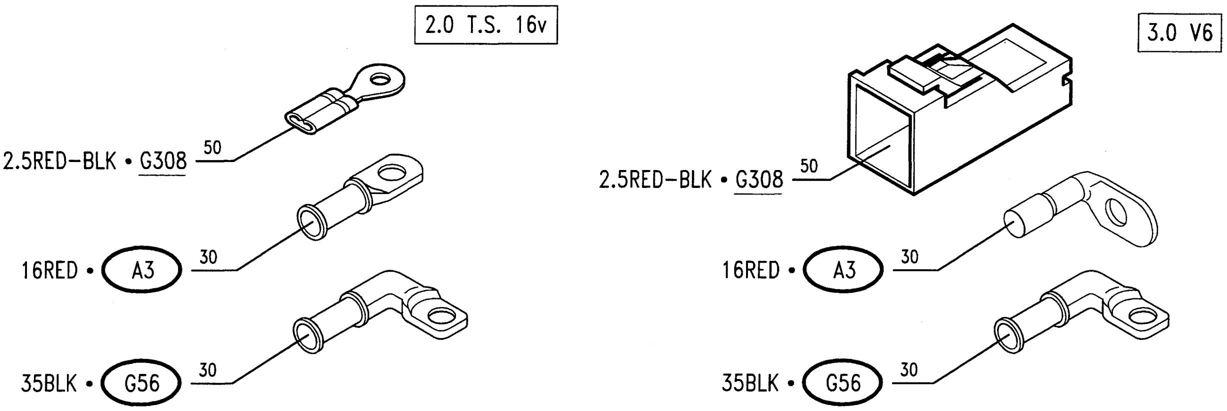

Ignition switch B1 A

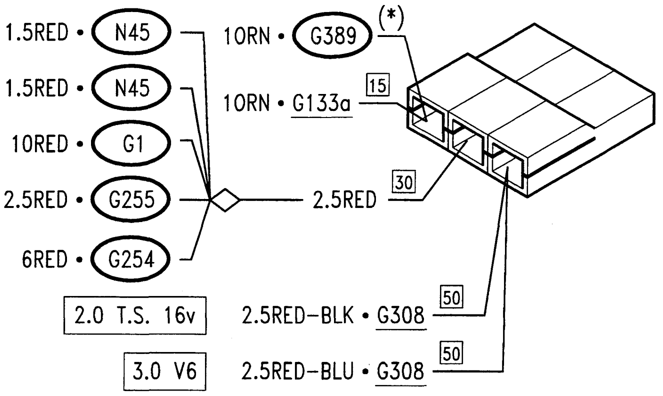

Ignition switch B1 B

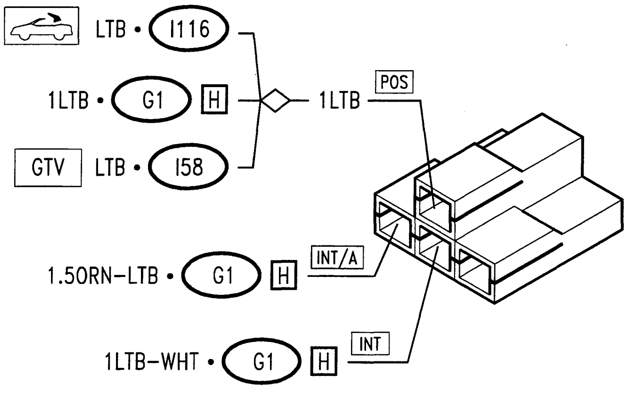

Heated rearscreen control switch B9

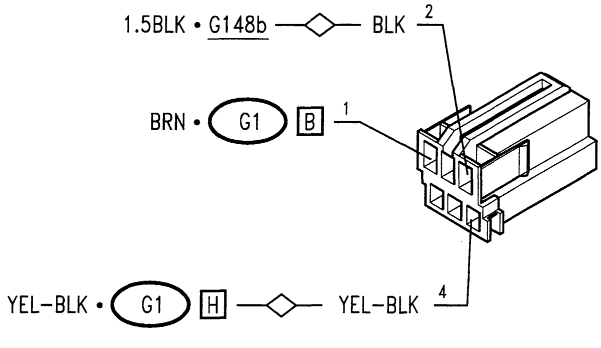

Fog lights control switch B10

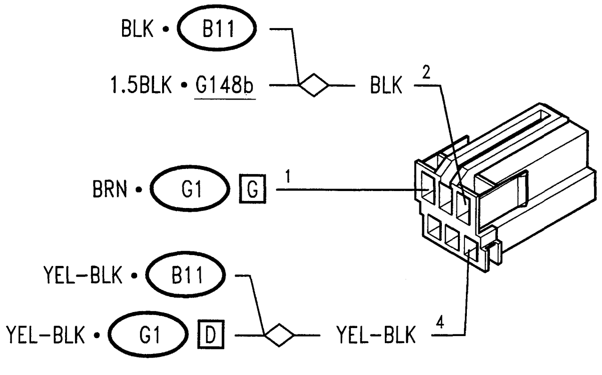

(*) from chassis no.___

Rear fog guards control switch

B11

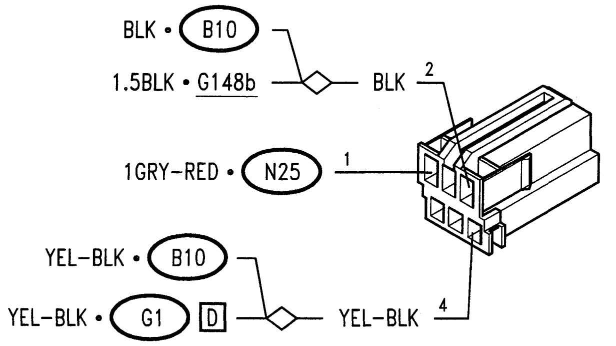

Hazard warning lights control switch

B12

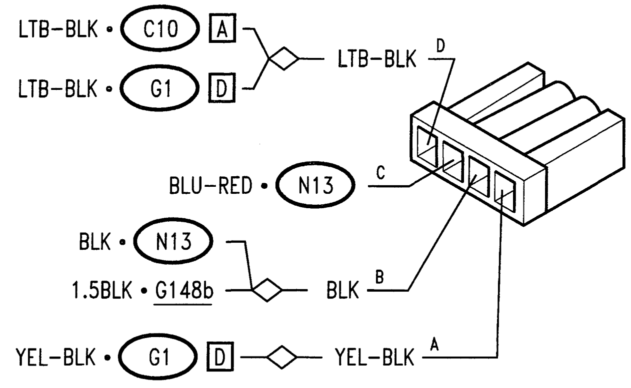

Instrument panel light dimmer button

B16

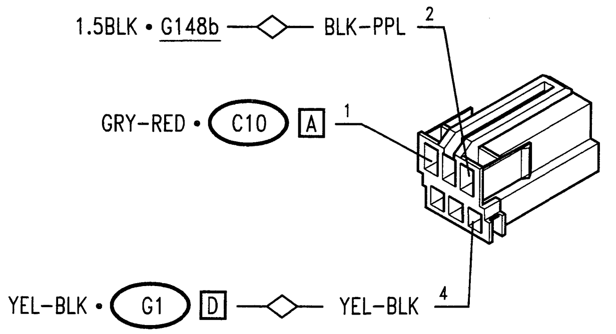

Right front power window control switch (on RH door)

B21a

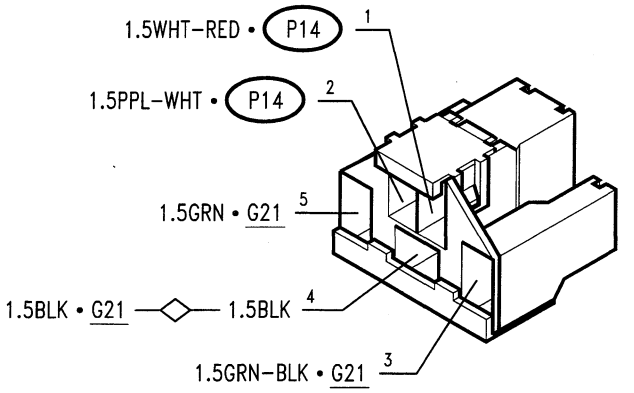

Right front power window control switch (on LH door)

B21b

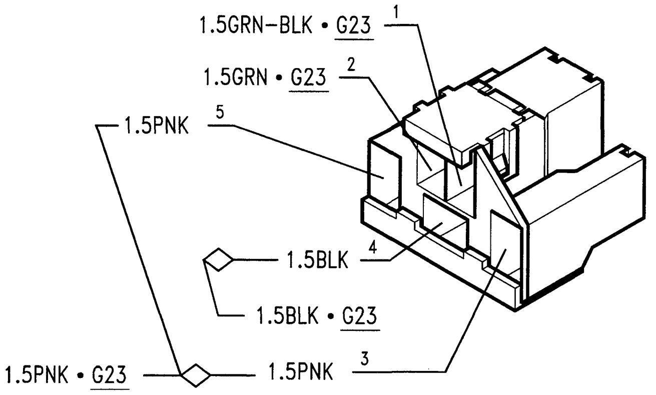

Wing mirror control switch

B36

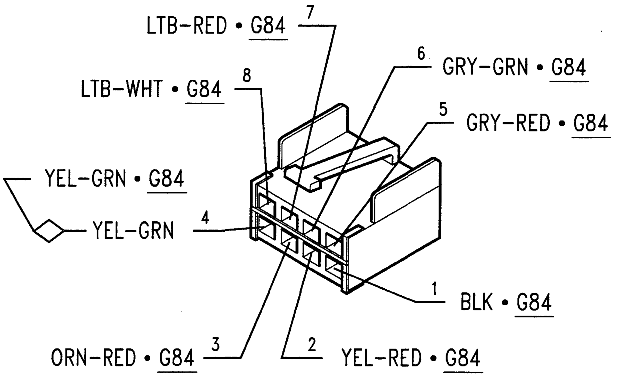

Trip meter reset switch

B40

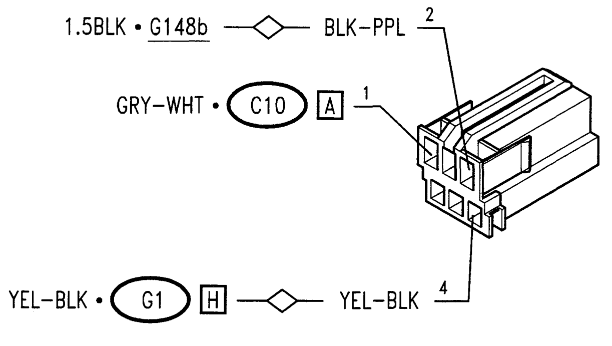

Sun roof motor control switch

B47

GTV

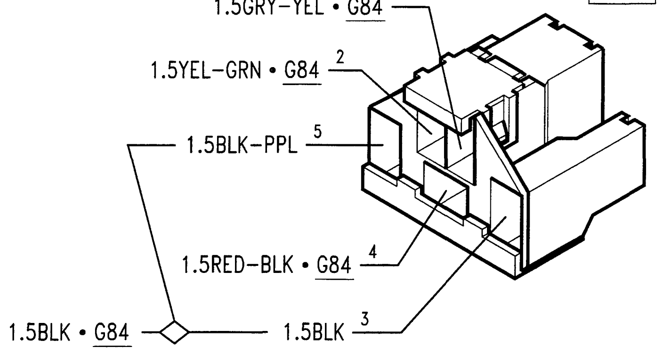

Front power window switch with automatic mechanism B53

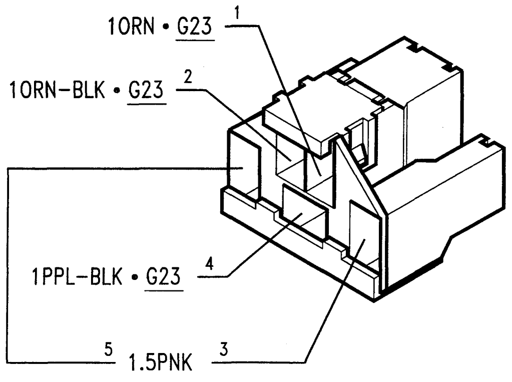

Fuel flap opening switch B61

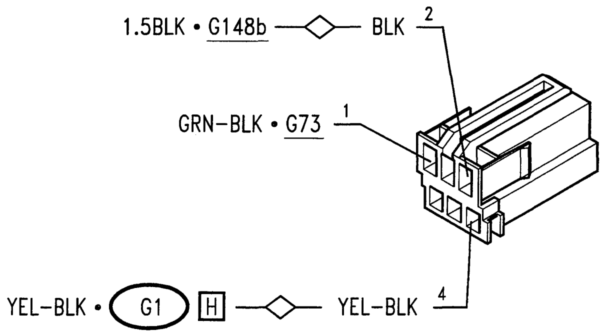

Steering column lever unit B68 A

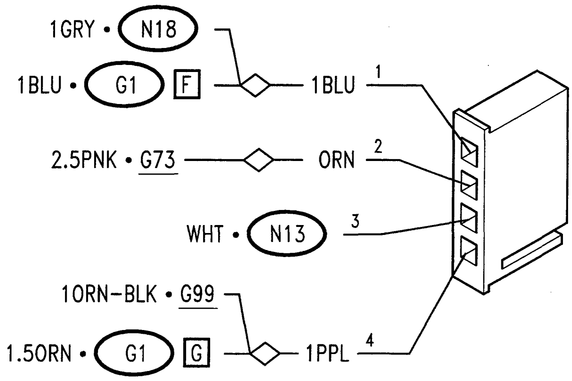

Steering column lever unit B68 B

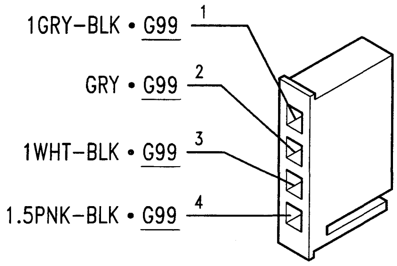

Steering column lever unit C B68 C

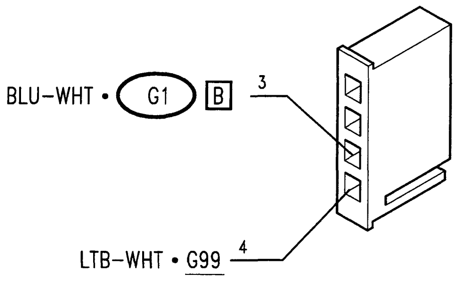

Steering column lever unit B68 D

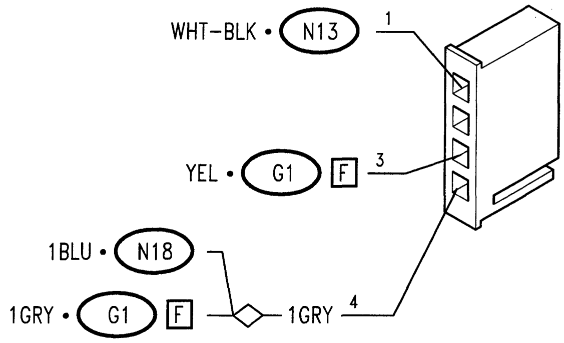

Steering column lever unit B68 E

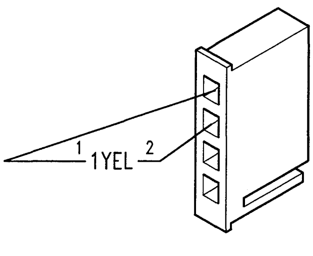

Headlamp aiming device B69

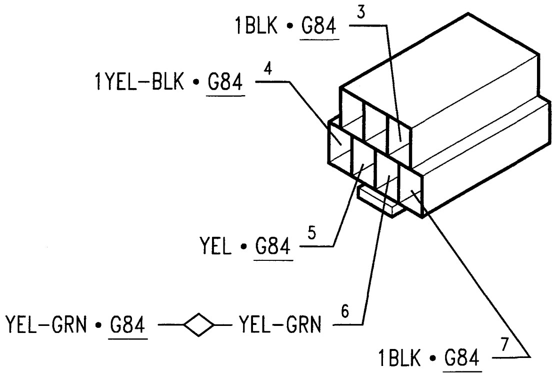

Luggage compartment opening switch with glove box light — B87

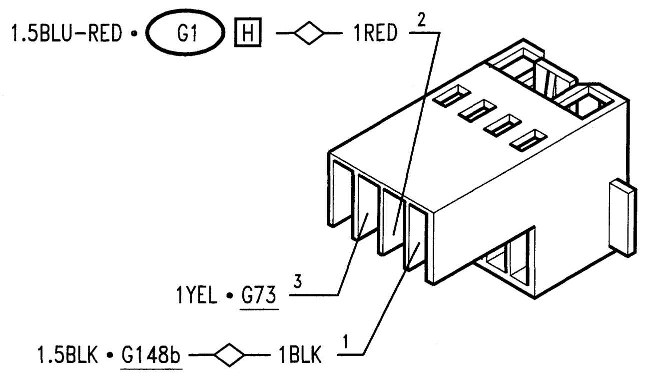

Air recirculation switch — B98

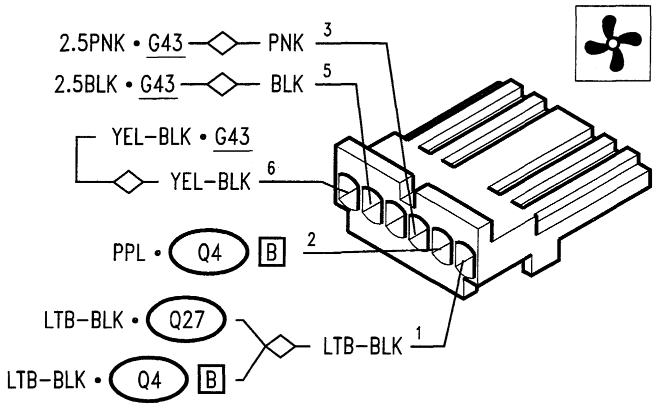

Hood release switch — B99

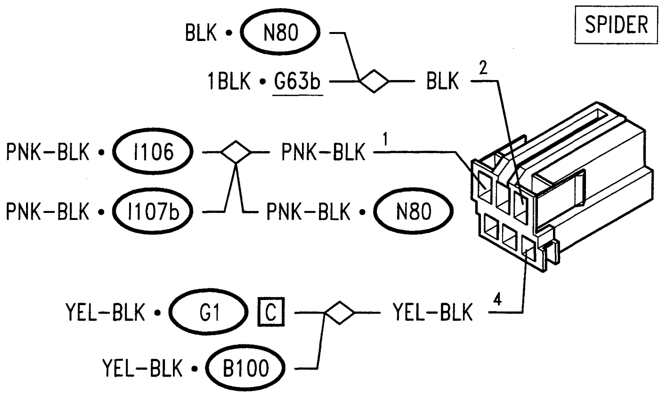

Hood release switch (*) — B99

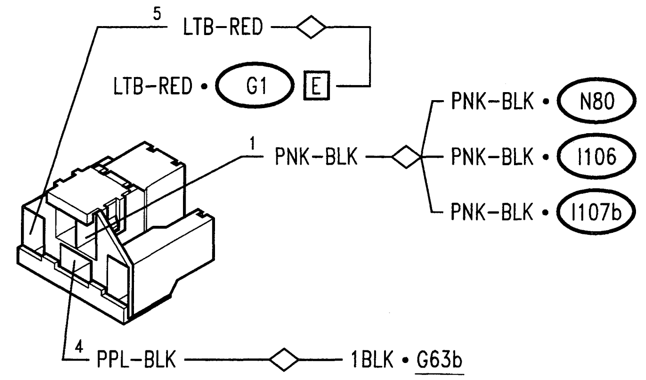

Hood release switch — B99

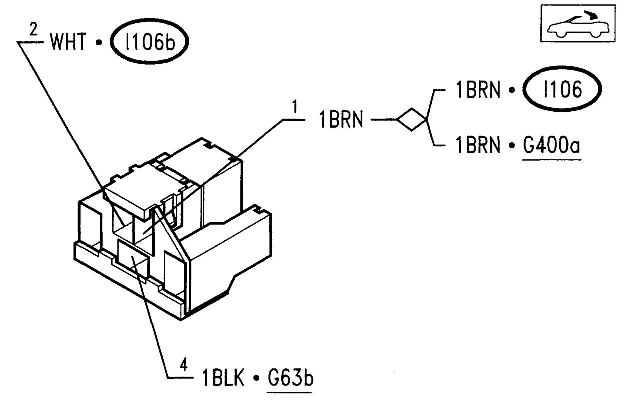

Hood cover release switch — B100

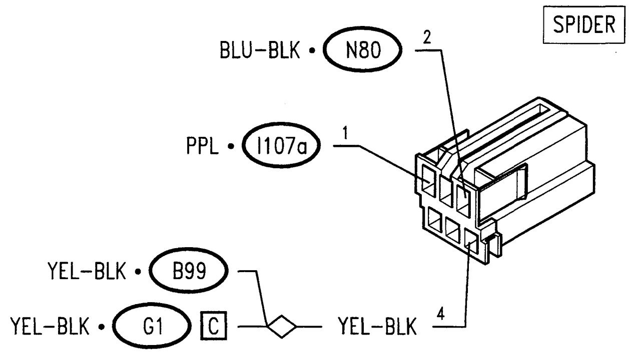

Hood cover release switch (*) — B100

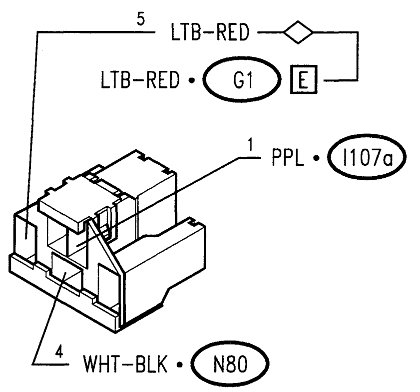

Hood cover release switch — B100

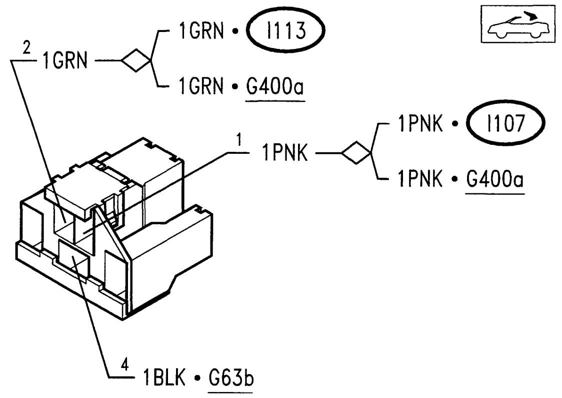

(*) from chassis no.___

Automatic hood control switch

B101

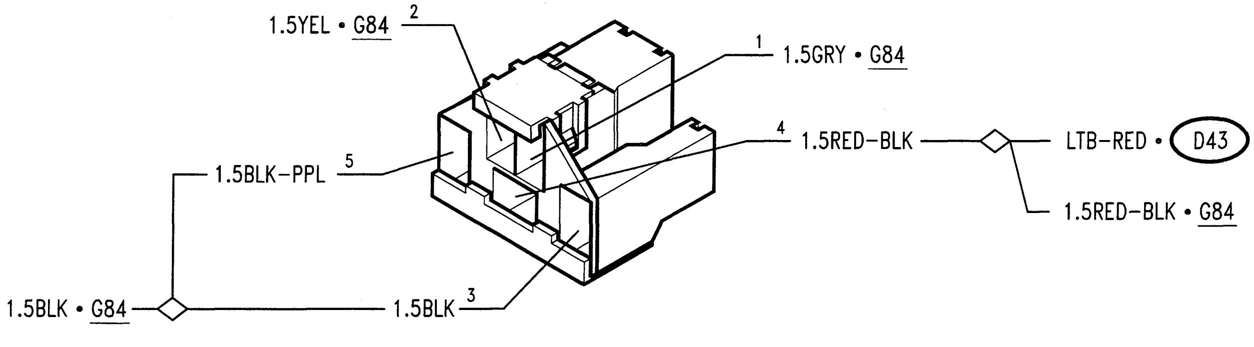

Instrument cluster

C10 A

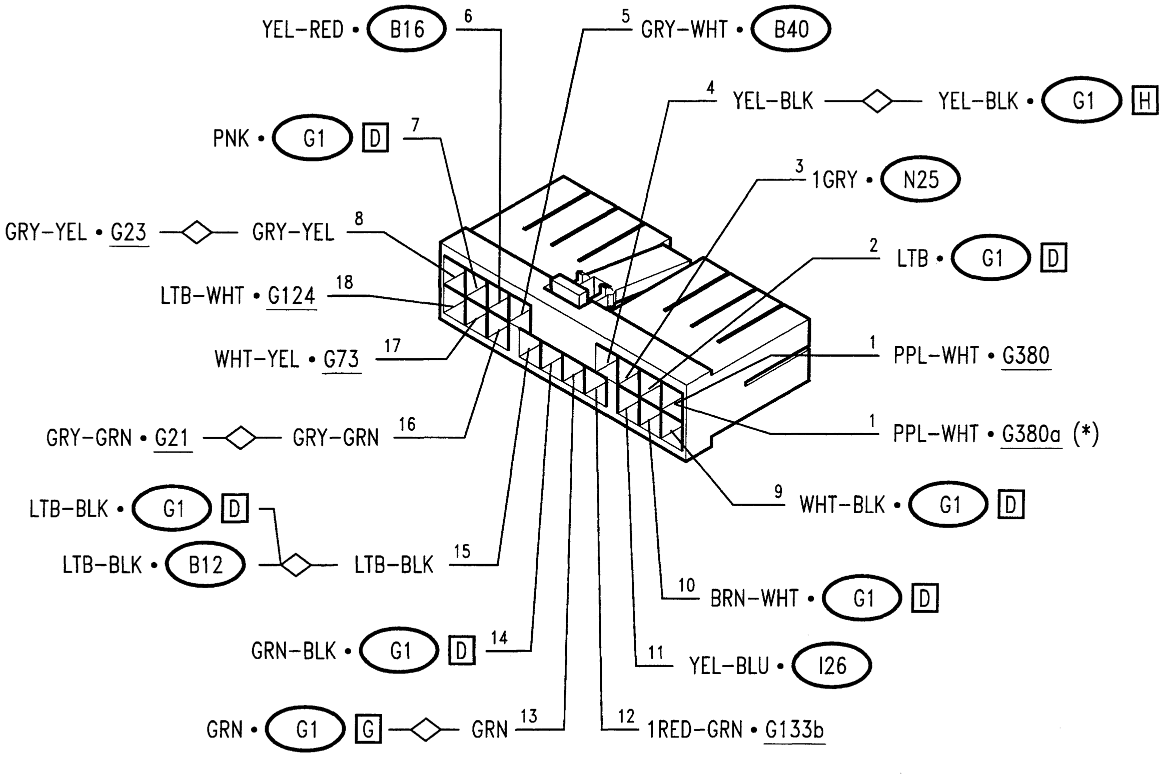

Instrument cluster

C10 B

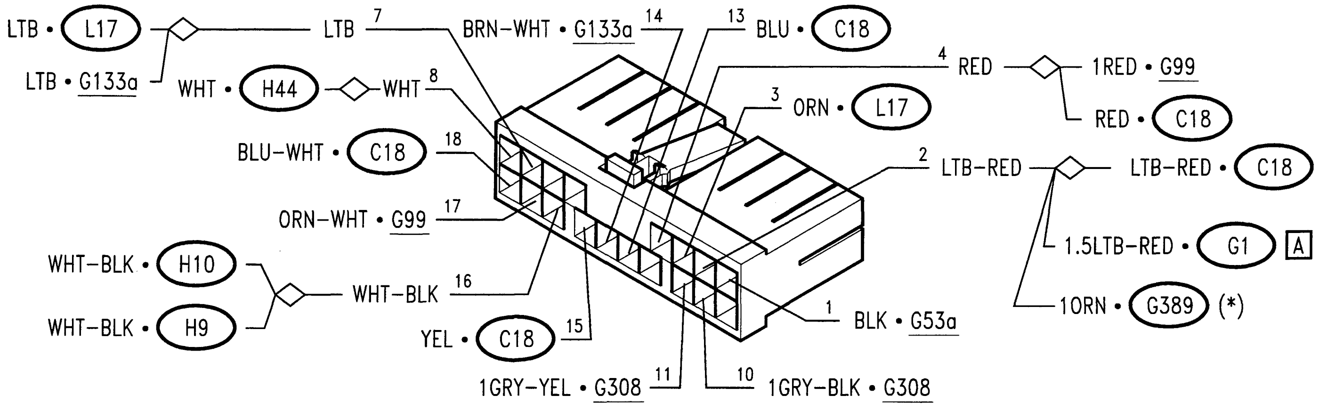

(*) from chassis no.___

Auxiliary instrument cluster

C18

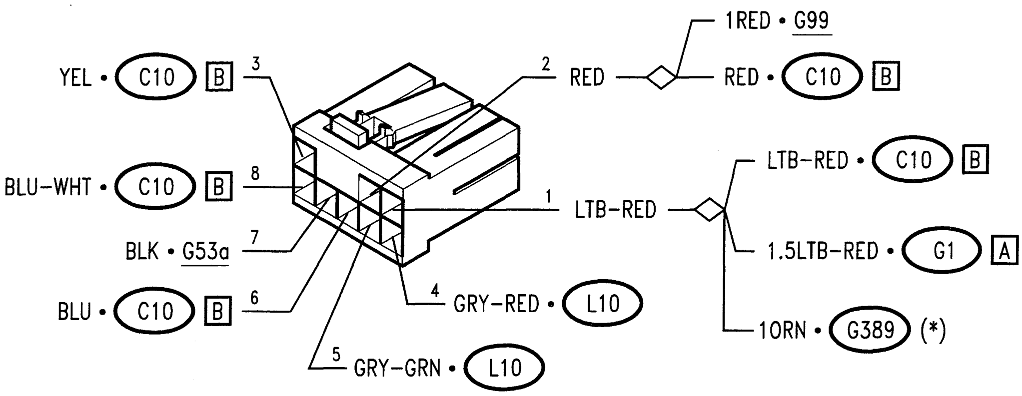

Anti-theft device led indicator

D31

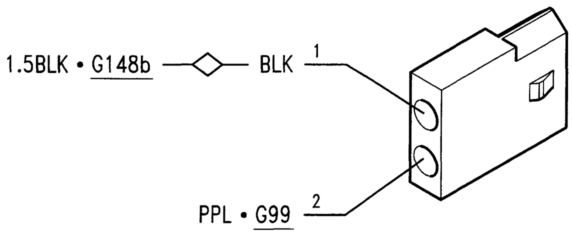

Signalling led for automatic hood

D43

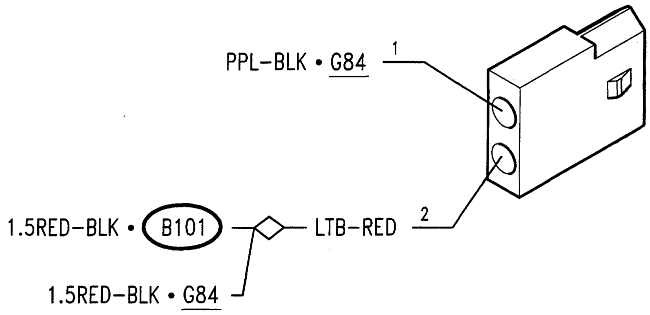

LH front direction indicator bulb

E1a

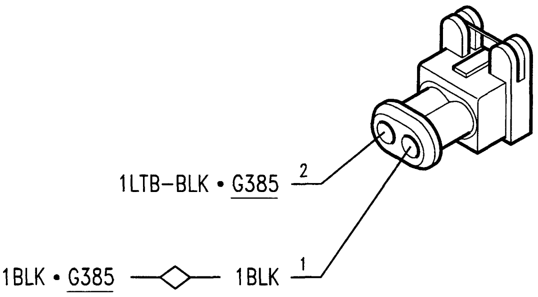

RH front direction indicator bulb

E1b

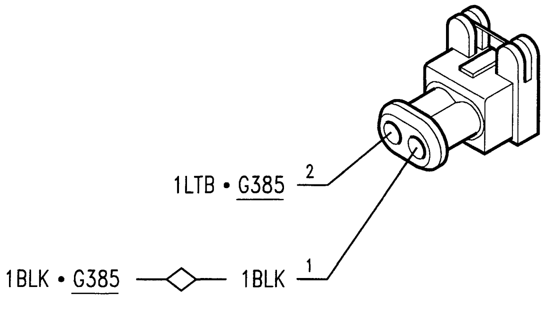

LH front side light bulb

E2a

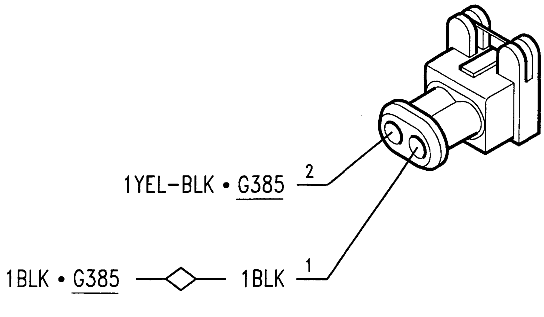

(*) from chassis no.___

RH front side light bulb. **E2b**

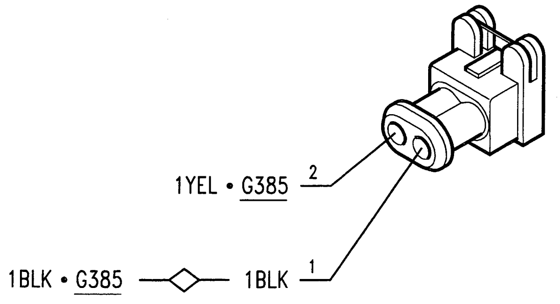

LH low beam light bulb **E5a**

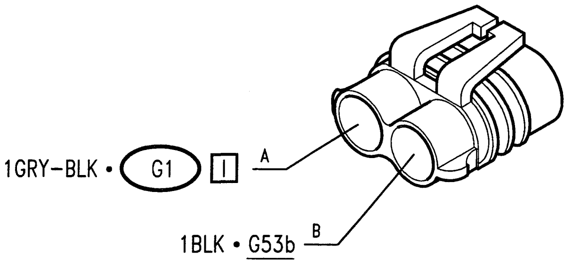

RH low beam light bulb **E5b**

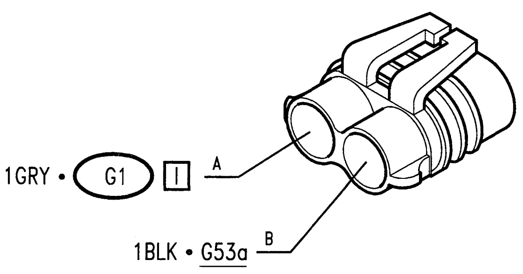

LH high beam light bulb **E7a**

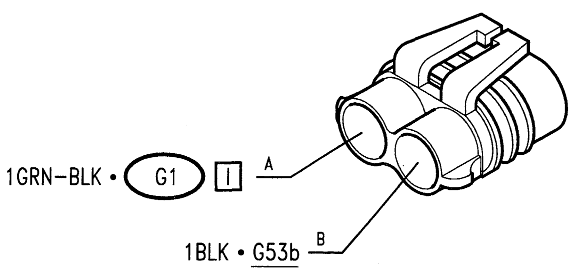

RH high beam light bulb **E7b**

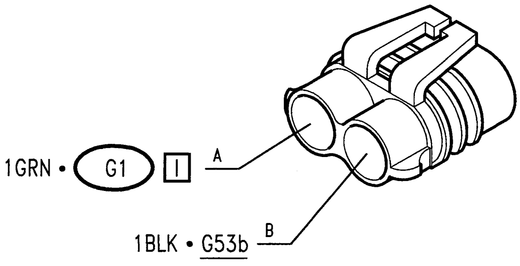

LH direction indicator light bulb **E9a**

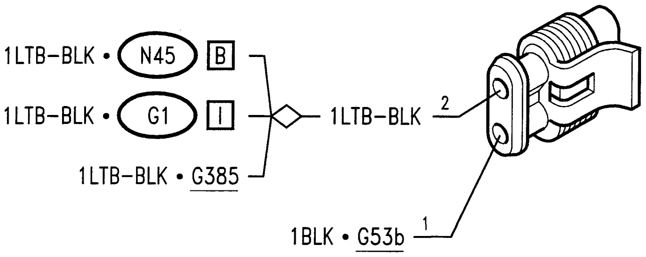

RH direction indicator light bulb **E9b**

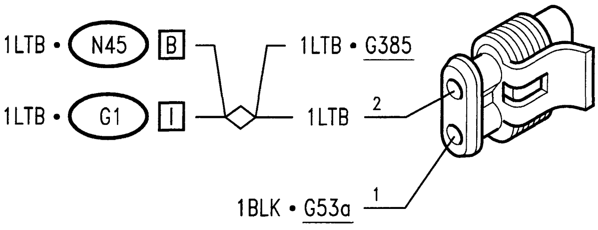

LH fog light bulb **E10a**

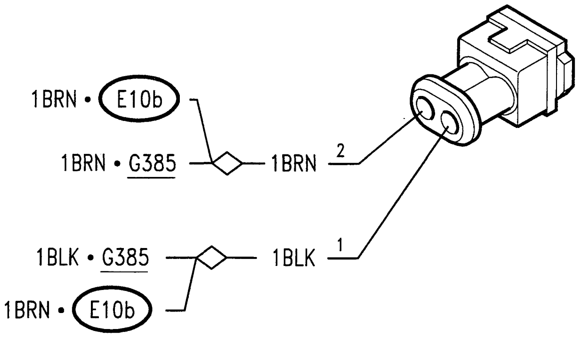

RH fog light bulb — E10b

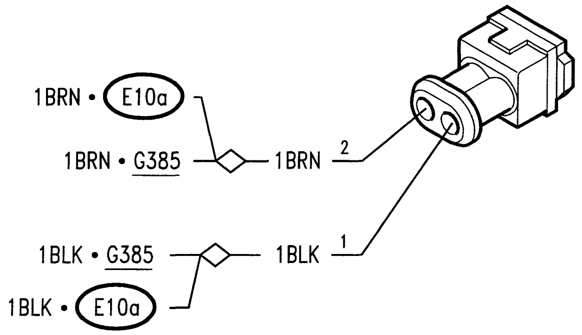

LH number plate light bulb — E17a

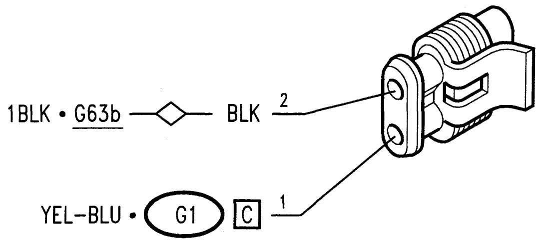

RH number plate light bulb — E17b

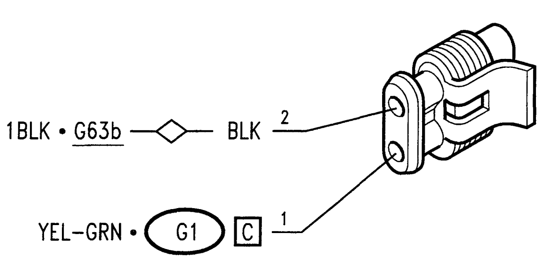

RH tail light cluster — E19

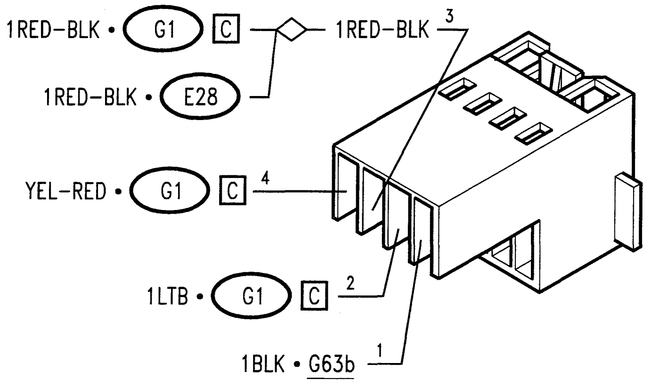

LH tail light cluster — E20

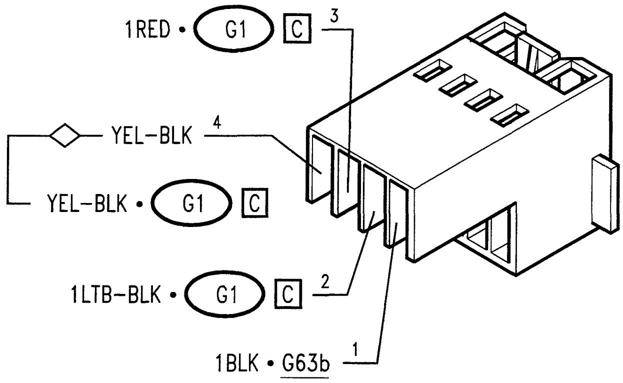

Third stop light — E28

GTV

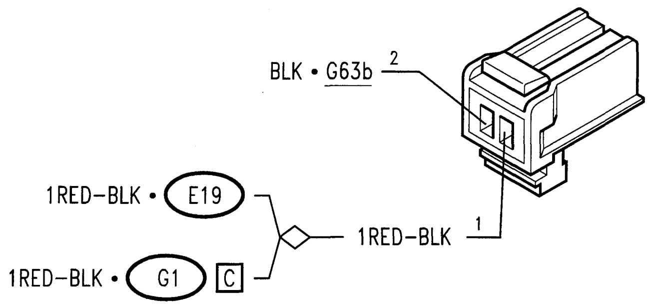

SPIDER

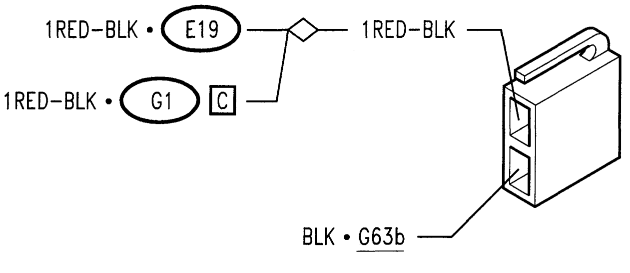

Rear RH fog guard/reversing light **E30**

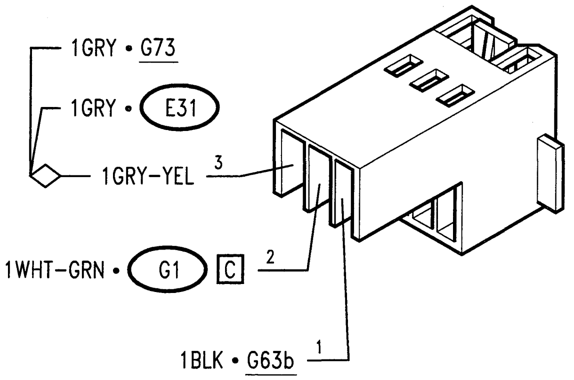

Rear LH fog guard/reversing light **E31**

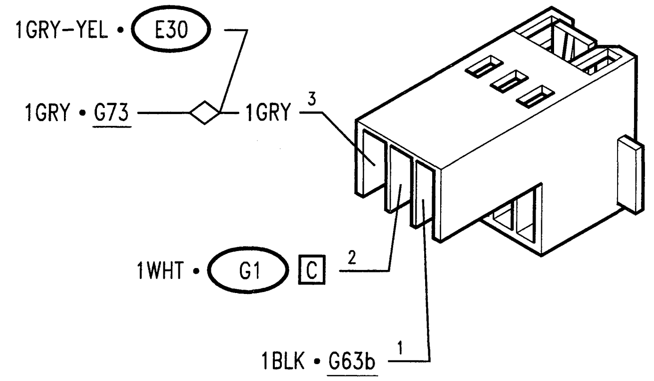

Passenger compartment ceiling light **F3**

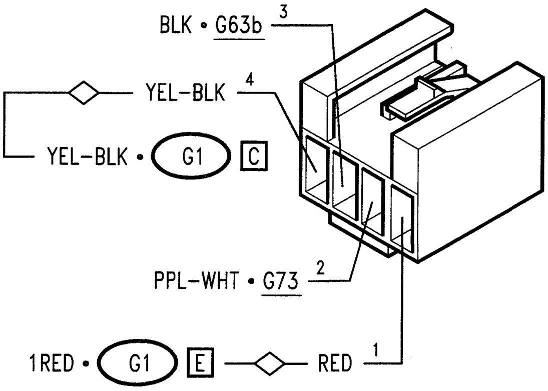

Luggage compartment light **F5**

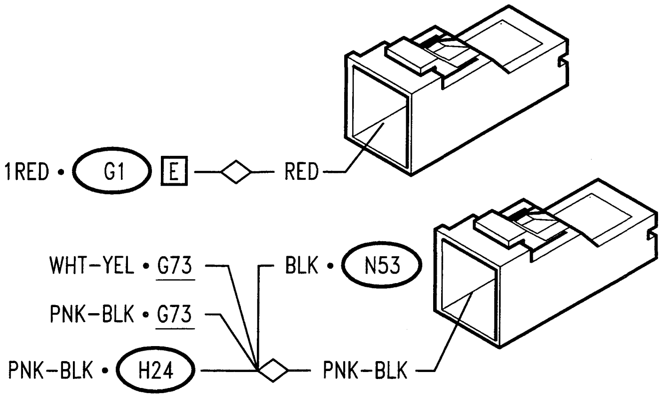

Heating/ventilation controls light bulb a **F8a**

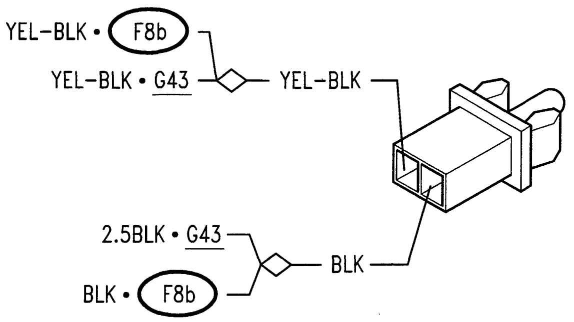

Heating ventilation controls light bulb b **F8b**

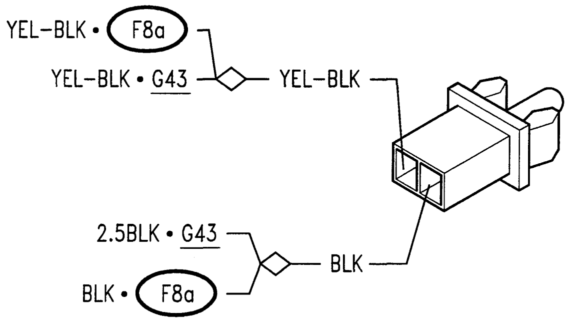

RH foot well light **F23**

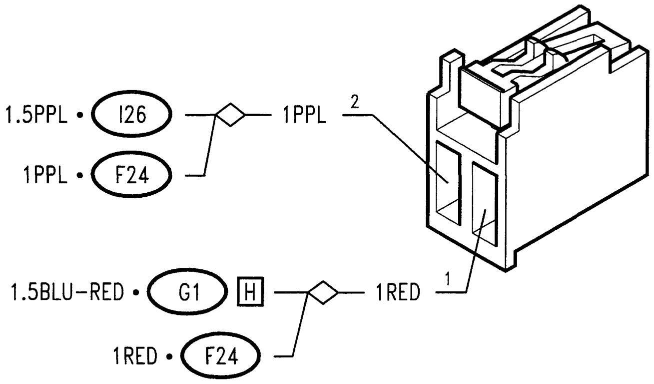

LH foot well light **F24**

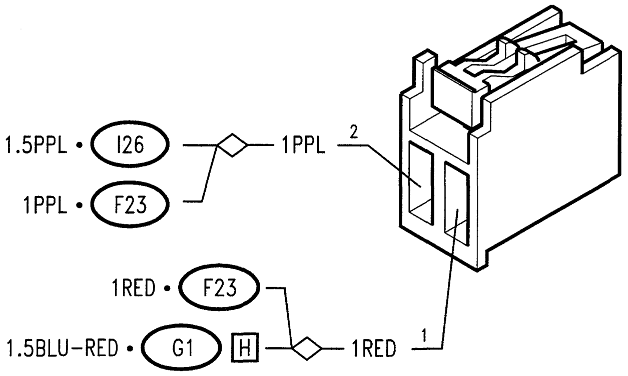

Light on LH front door	F45	Light on RH front door	F46

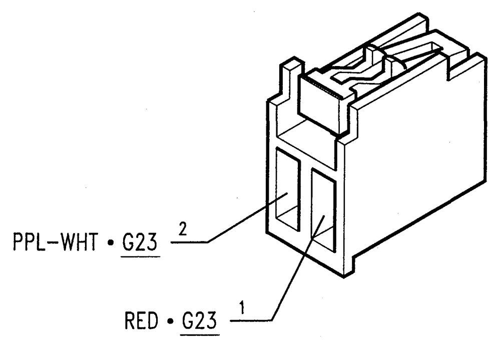

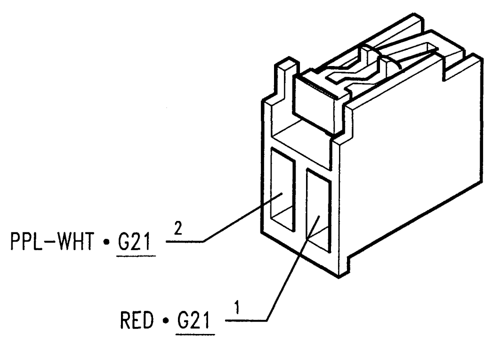

Fusebox	G1

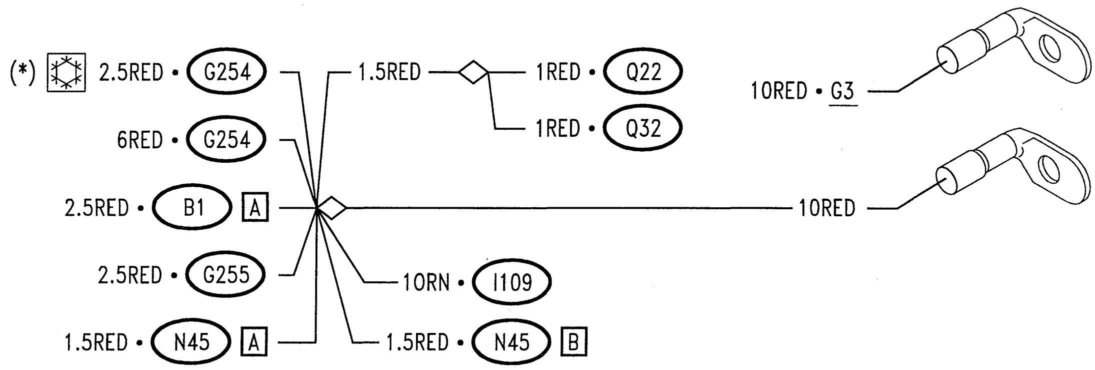

Fusebox	G1 A

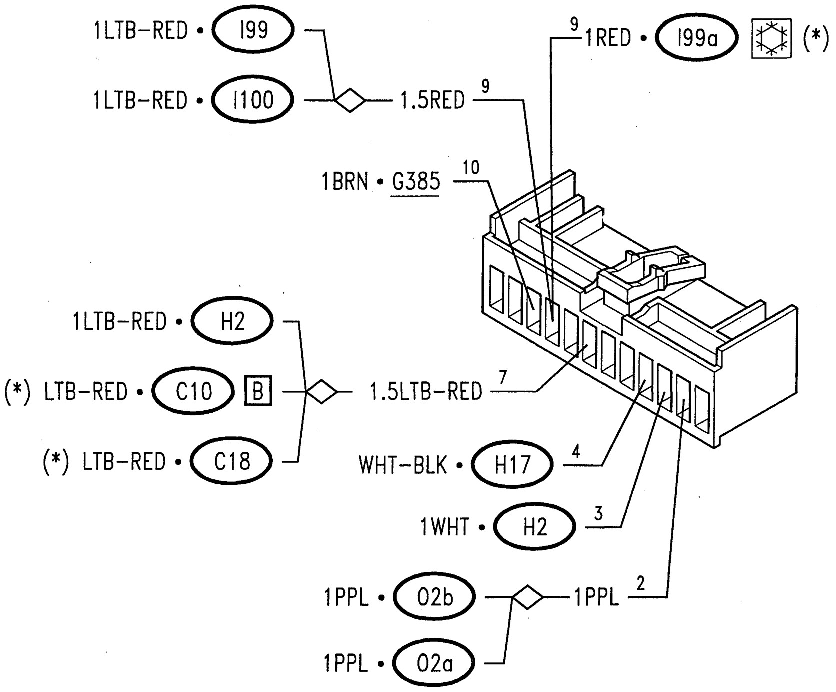

(*) up to chassis no___

Fusebox	G1 B

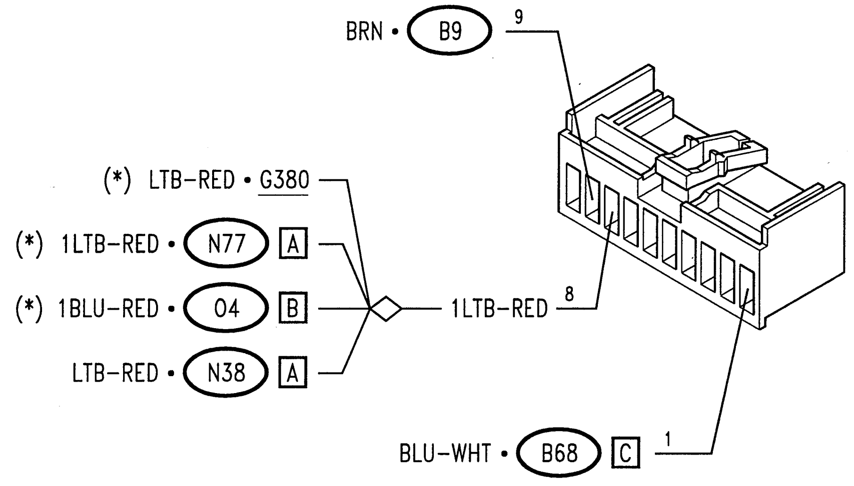

Fusebox	G1 C

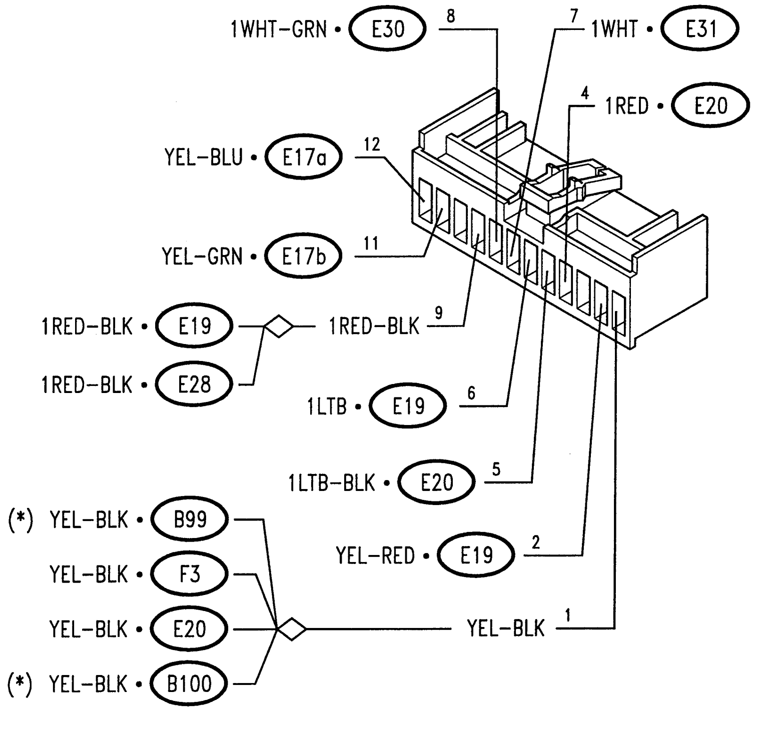

(*) up to chassis no___

Fusebox

G1 D

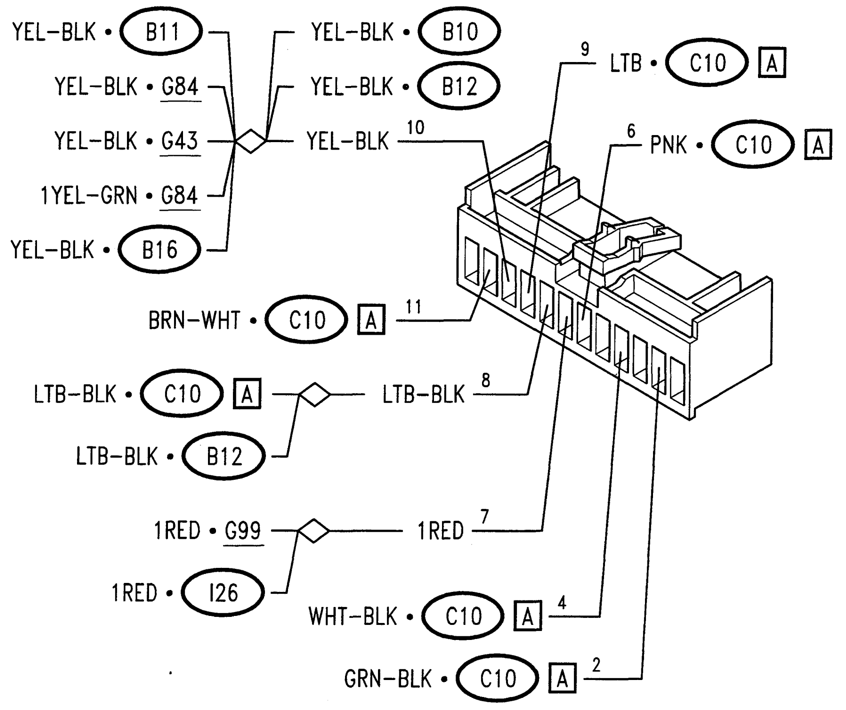

Fusebox

G1 E

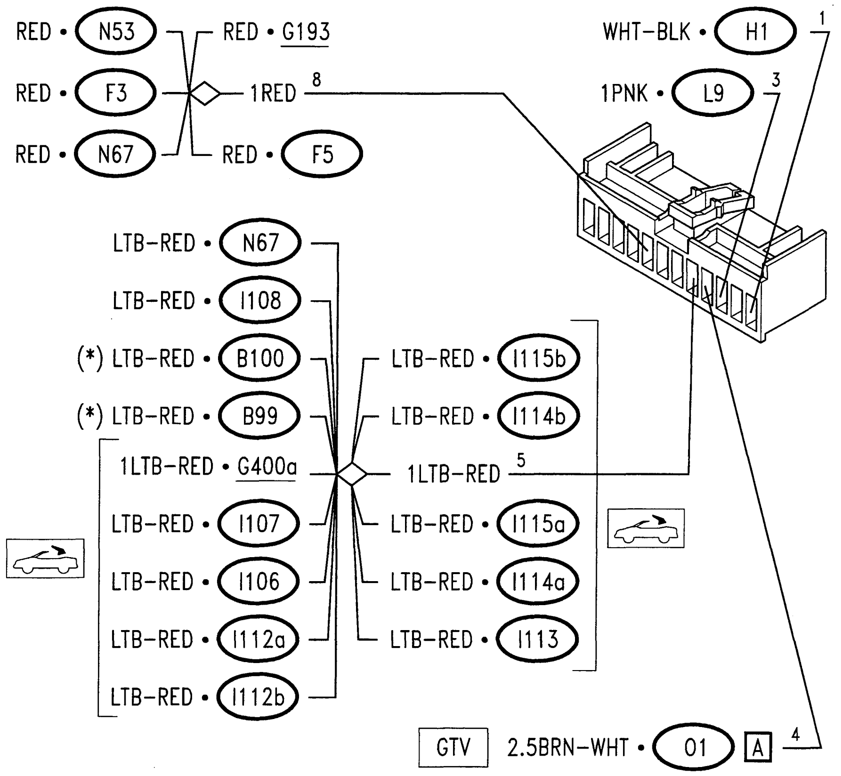

(*) from chassis no.___

Fusebox G1 F

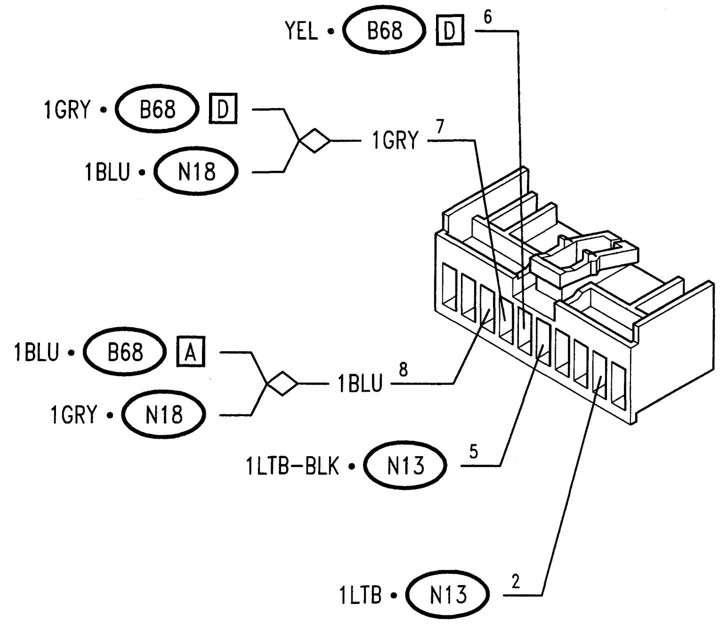

Fusebox G1 G

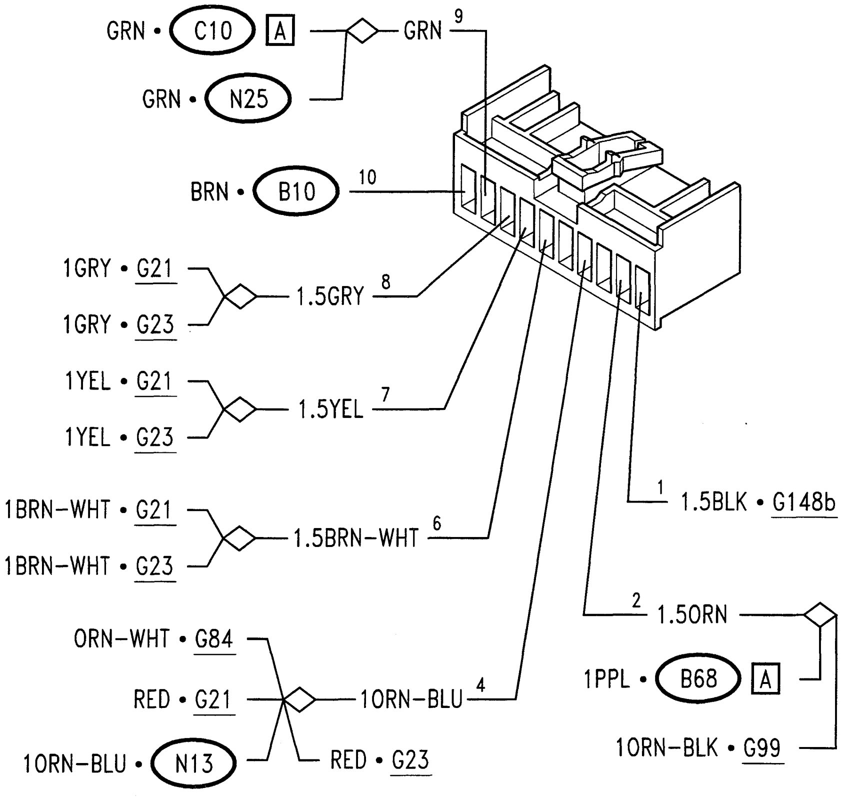

Fusebox

G1 H

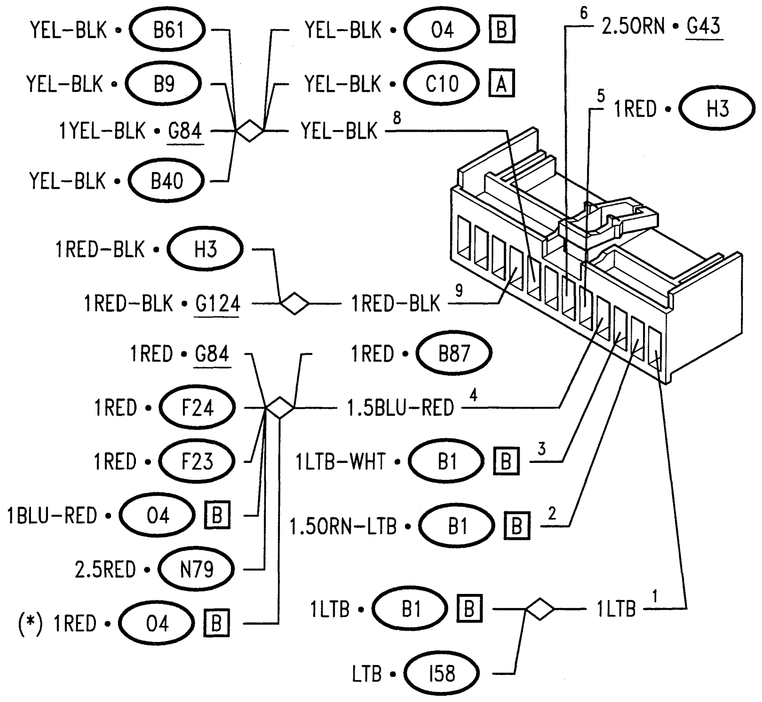

Fusebox

G1 I

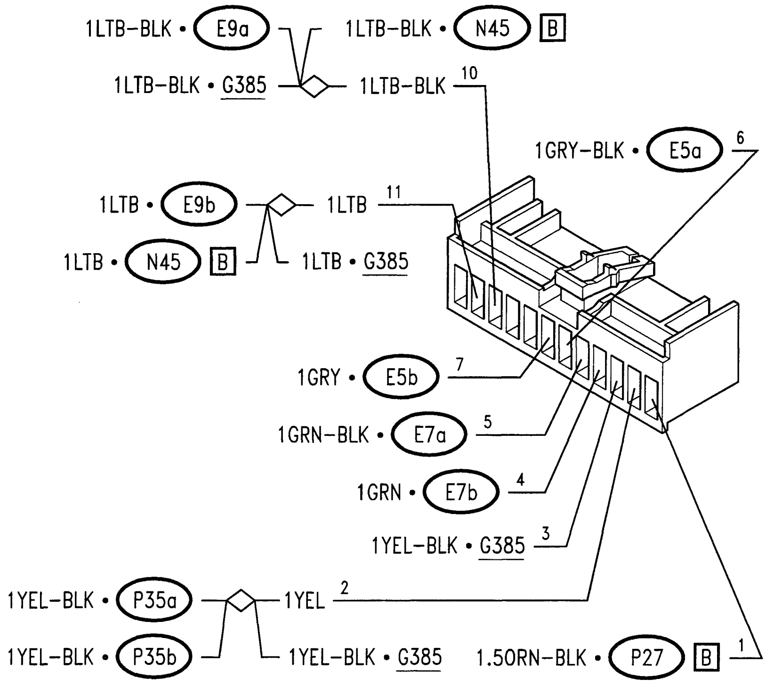

(*) from chassis no.____

Fusebox G1 J

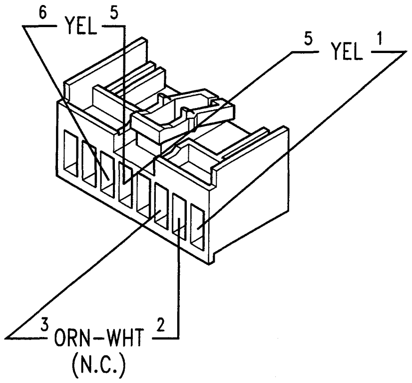

Fusebox G1 L

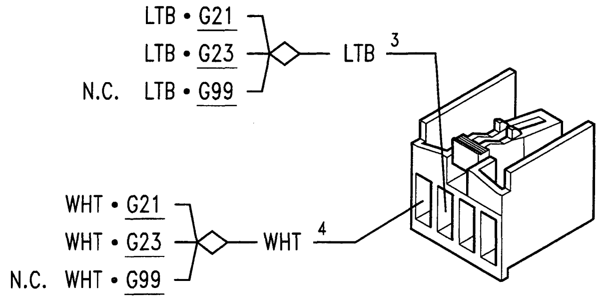

Fusebox G1 M

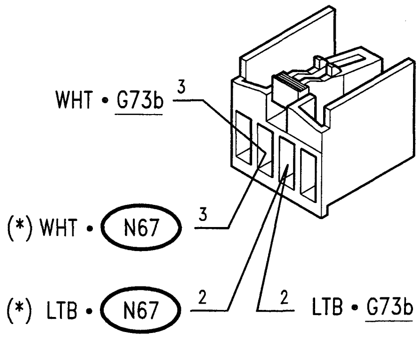

Fusebox G1 Q

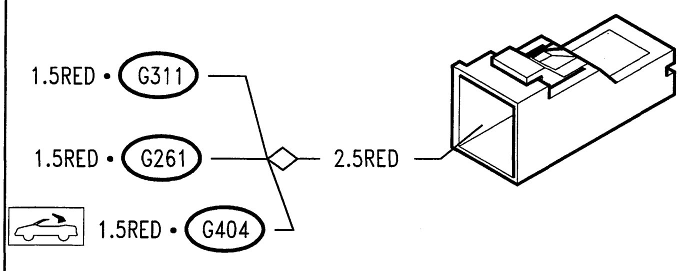

Fusebox terminal connector G3

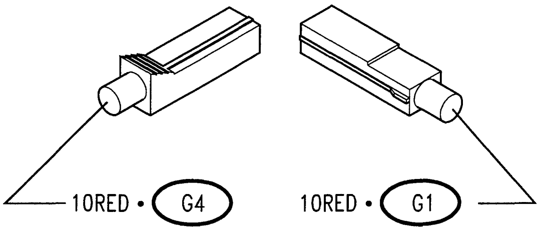

Free fuse G4

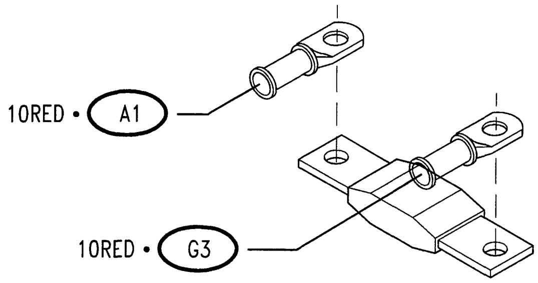

(*) up to chassis no.___

Connector for RH front door wiring (vehicle side)

G21

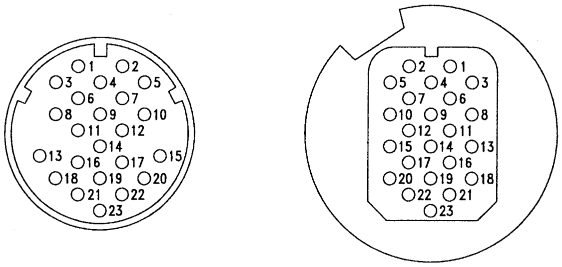

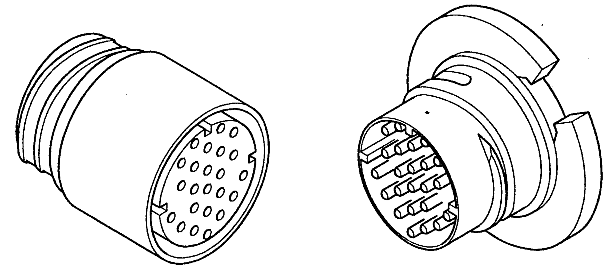

- 1 1.5PNK-BLK • (04) [A]
- 2 1.5BLK-PPL • (04) [A]
- 3 RED ◇ 1ORN-BLU • (G1) [G]
- 4 PPL-WHT ◇ 1.5PPL • (I26)
- 5 1BRN-WHT ◇
  - 1BRN-WHT • G23
  - 1.5BRN-WHT • (G1) [G]
- 6 GRY-GRN • G84
- 7 YEL-RED ◇
  - YEL-RED • G84
  - YEL-RED • G23
- 8 LTB-WHT • G84
- 9 N.C.
- 10 N.C.
- 11 1.5GRN-BLK • G23
- 12 1.5GRN • G23
- 13 N.C.
- 14 N.C.
- 15 1YEL ◇
  - 1YEL • G23
  - 1.5YEL • (G1) [G]
- 16 1GRY ◇
  - 1GRY • G23
  - 1.5GRY • (G1) [G]
- 17 WHT ◇
  - WHT • G99
  - WHT • G23
  - WHT • (G1) [L]
- 18 LTB ◇
  - LTB • G99
  - LTB • G23
  - LTB • (G1) [L]
- 19 GRY-GRN ◇
  - GRY-GRN • G99
  - GRY-GRN • (C10) [A]
- 20 N.C.
- 21 N.C.
- 22 1.5BLK • G148b
- 23 N.C.

Connector for RH front door wiring (door side)

G21

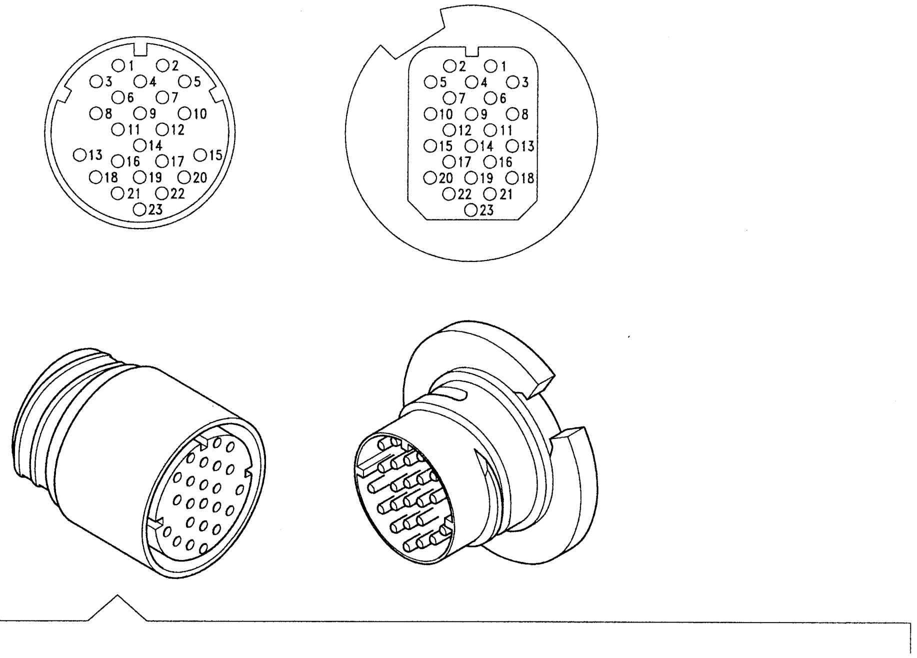

1 1.5PNK-BLK
- 1.5PNK-BLK • 05a
- 1.5PNK-BLK • 031a

2 1.5PPL-BLK
- 1.5PPL-BLK • 05a
- 1.5PPL-BLK • 031a

3 RED • F46

4 PPL-WHT • F46

5 1BRN-WHT • 018

6 GRY • P9

7 YEL-RED • P9

8 LTB • P9

9 N.C.

10 N.C.

11 1.5GRN-BLK • B21a

12 1.5GRN • B21a

13 N.C.

14 N.C.

15 1YEL • P10 A

16 1GRY • P10 A

17 WHT • P10 A

18 LTB • P10 A

19 GRY-GRN • P10 B

20 N.C.

21 N.C.

22 1.5BLK
- 1BLK • 018
- BLK • P10 A
- BLK • P10 B
- 1.5BLK • B21a

23 N.C.

Connector for LH front door wiring (chassis side)	G23

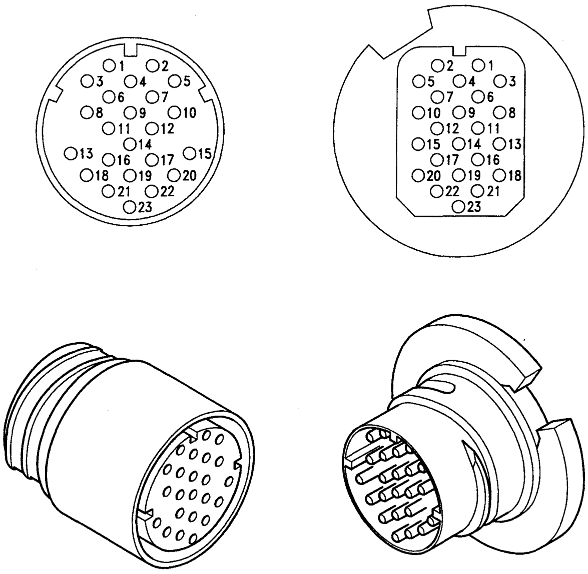

- 1 1.5RED-BLK • 04 A
- 2 1.5WHT-BLK • 04 A
- 3 RED
  - 1ORN-BLU • G1 G
  - RED • G21
- 4 1PPL-WHT
  - 1.5PPL • I26
- 5 1BRN-WHT
  - 1BRN-WHT • G21
  - 1.5BRN-WHT • G1 G
- 6 GRY-RED • G84
- 7 YEL-RED
  - YEL-RED • G84
  - YEL-RED • G21
- 8 LTB-RED • G84
- 9 1ORN-BLK • N38 A
- 10 1ORN • N38 A
- 11 1.5GRN-BLK • G21
- 12 1.5GRN • G21
- 13 1.5PPL-YEL • N38 B
- 14 1.5WHT-GRN • N38 B
- 15 1YEL
  - 1YEL • G21
  - 1.5YEL • G1 G
- 16 1GRY
  - 1GRY • G21
  - 1.5GRY • G1 G
- 17 WHT
  - WHT • G99
  - WHT • G21
  - WHT • G1 L
- 18 LTB
  - LTB • G99
  - LTB • G21
  - LTB • G1 L
- 19 GRY-YEL
  - GRY-YEL • G99
  - GRY-YEL • C10 A
- 20 N.C.
- 21 1PPL-BLK
  - 1.5BLK • G148b
- 22 1.5BLK • G148b
- 23 1.5PNK • G310

Connector for LH front door wiring (door side)

G23

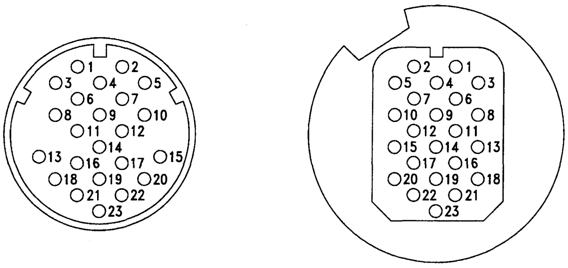

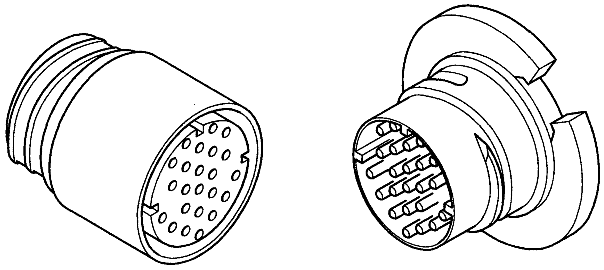

- 1 1.5RED-BLK
  - 1.5RED-BLK • 05b
  - 1.5RED-BLK • 031b
- 2 1.5WHT-BLK
  - 1.5WHT-BLK • 05b
  - 1.5WHT-BLK • 031b
- 3 RED • F45
- 4 PPL-WHT • F45
- 5 1BRN-WHT • 019
- 6 GRY • P8
- 7 YEL-RED • P8
- 8 LTB • P8
- 9 1ORN-BLK • B53
- 10 1ORN • B53
- 11 1.5GRN-BLK • B21b
- 12 1.5GRN • B21b
- 13 1.5PPL-YEL • P15
- 14 1.5WHT-GRN • P15
- 15 1YEL • P11 A
- 16 1GRY • P11 A
- 17 WHT • P11 A
- 18 LTB • P11 A
- 19 GRY-YEL • P11 B
- 20
- 21 1PPL-BLK • B53
- 22 1.5BLK
  - 1BLK • 019
  - BLK • P11 A
  - BLK • P11 B
  - 1.5BLK • B21b
- 23 1.5PNK
  - 1.5PNK • B21b
  - 1.5PNK • B21b

Air conditioner wiring connector

G38

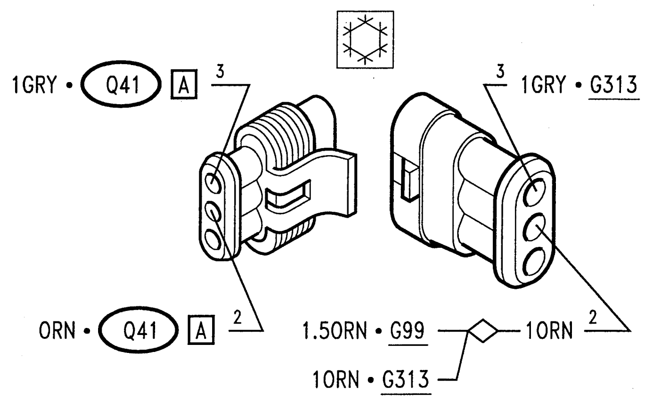

Connector for heating and ventilation control wiring

G43

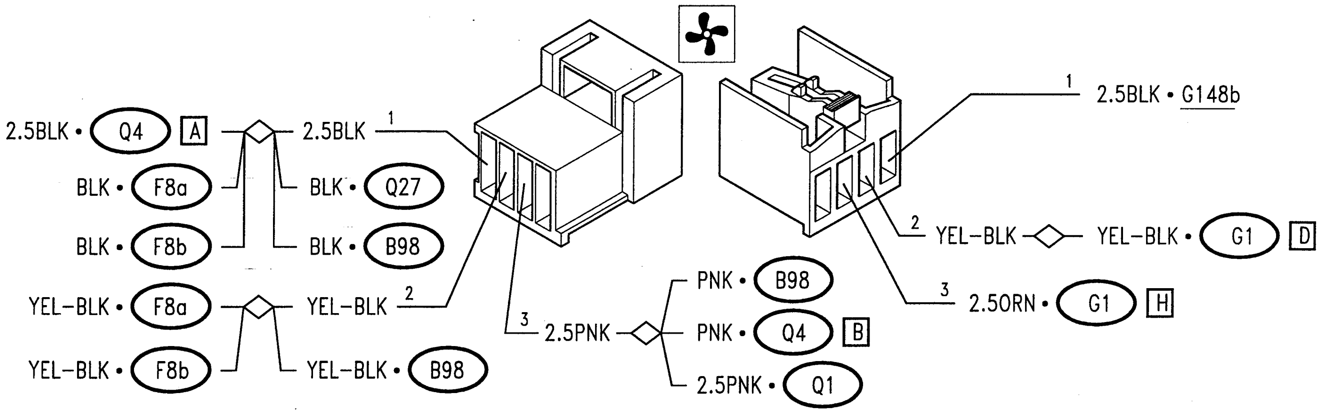

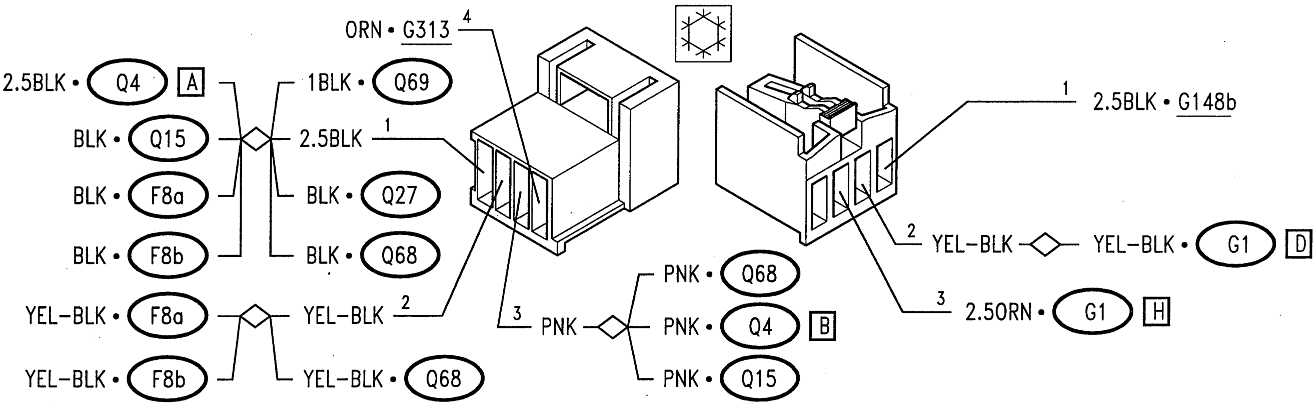

RH engine compartment earth

G53a

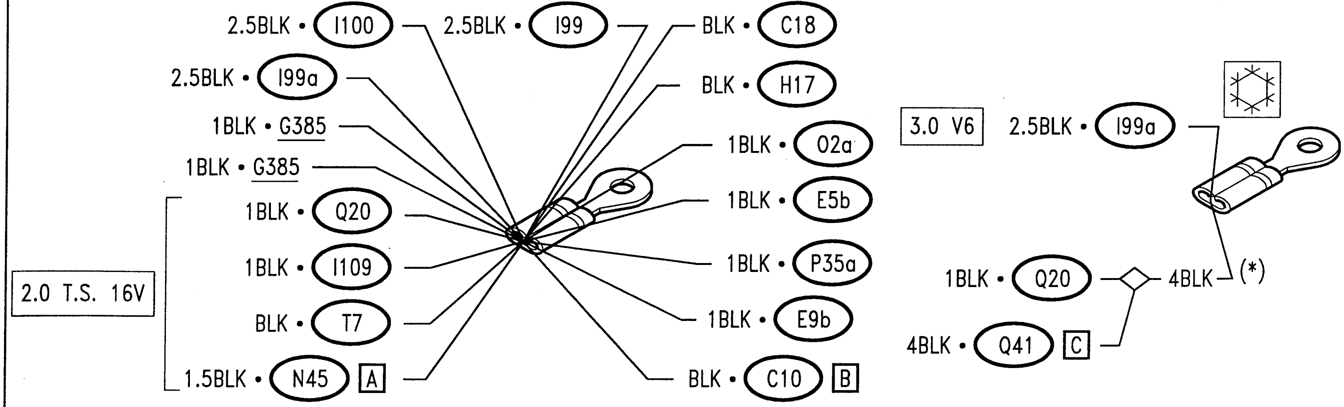

(*) 2.0 TS 16v up to chassis no.6023906

LH engine compartment earth **G53b**

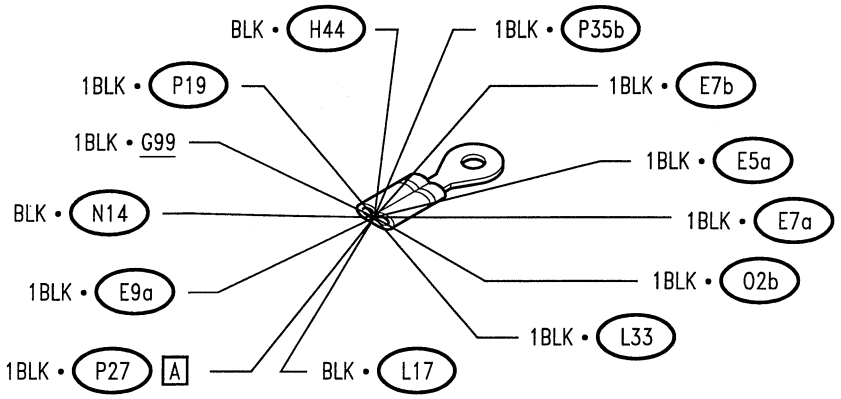

LH side panel earth **G55b**

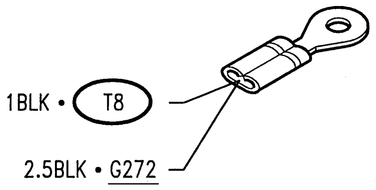

Branch terminal board **G56**

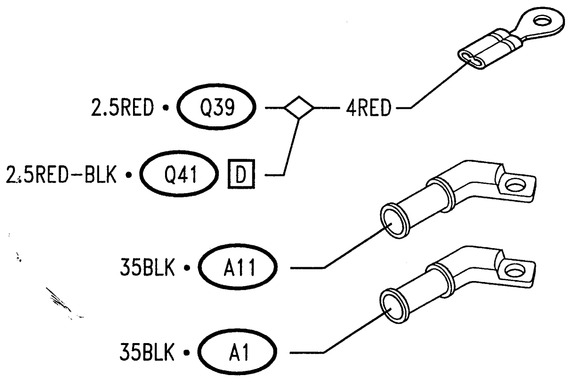

Injection wiring earth **G60**

2.0 T.S. 16v
M2.10.3

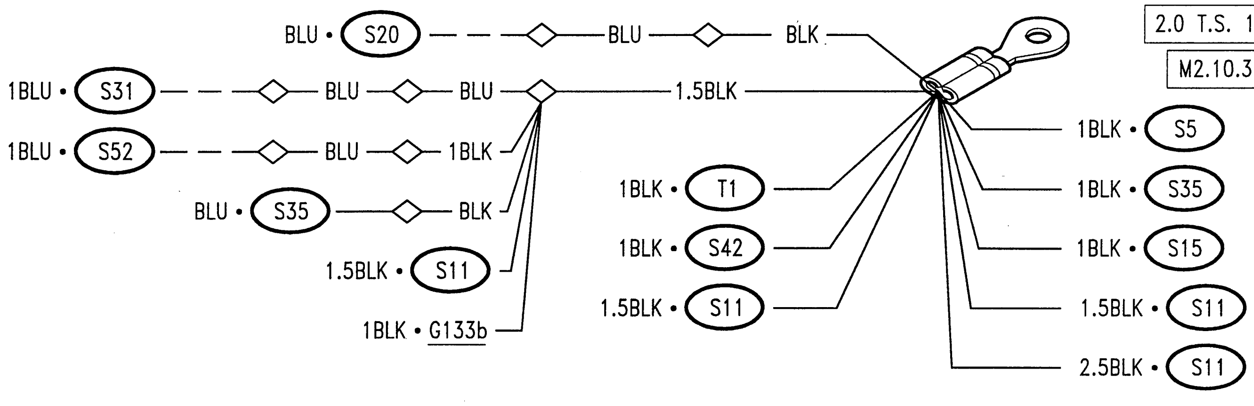

Injection wiring earth **G60**

2.0 T.S. 16v
M2.10.4

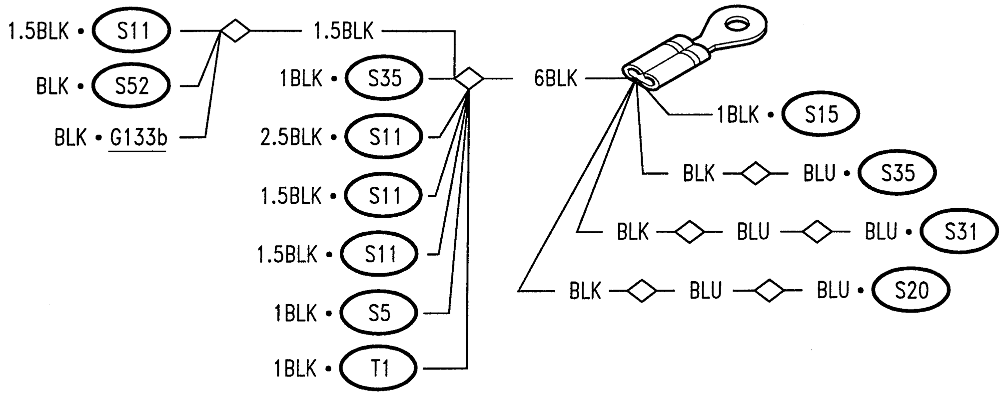

RH rear earth

G63a

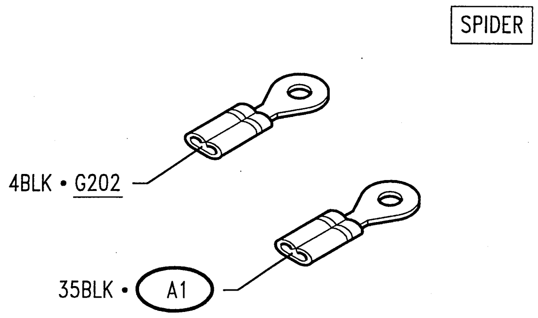

LH rear earth

G63b

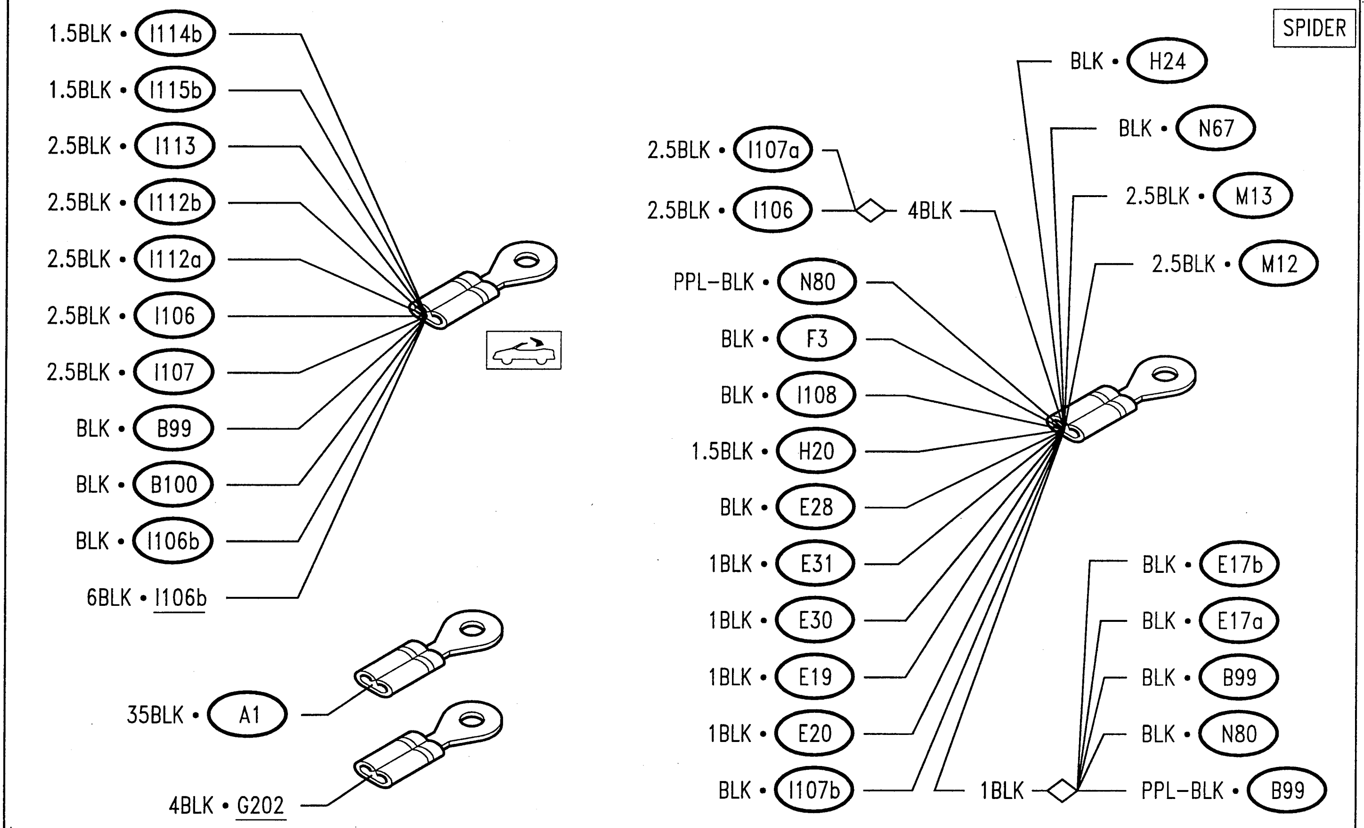

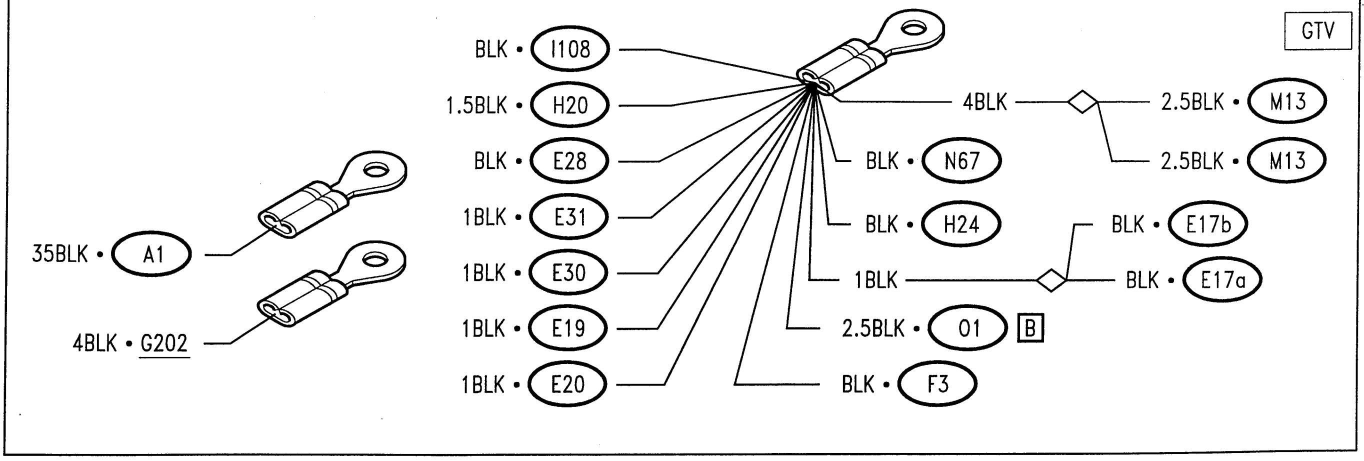

Connector for rear services

G73

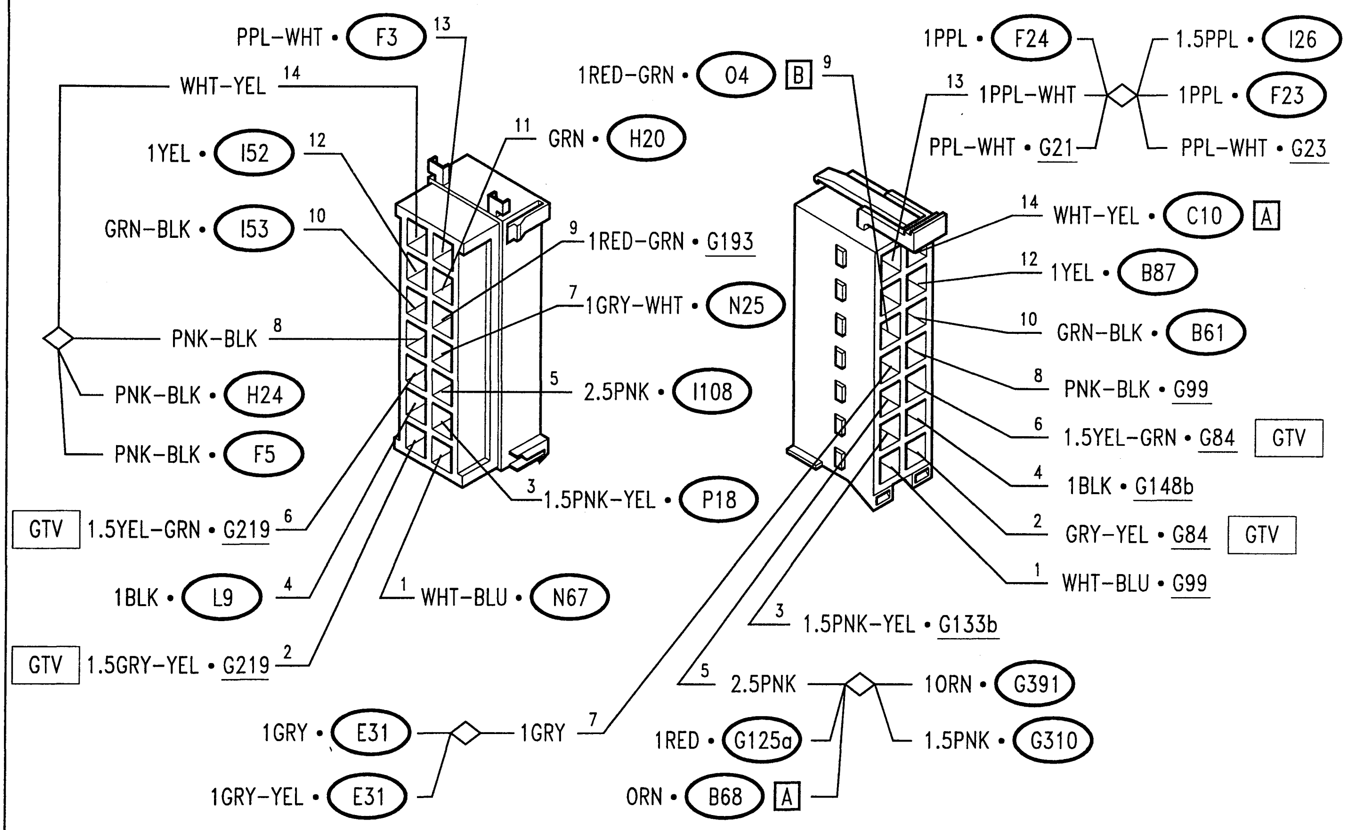

Connector for rear services (*)

G73b

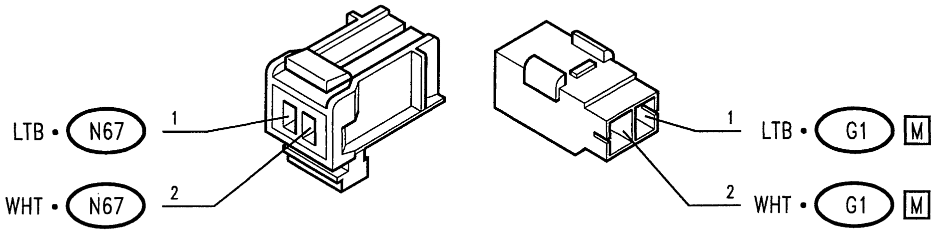

(*) from chassis no___

Console wiring connector

G84

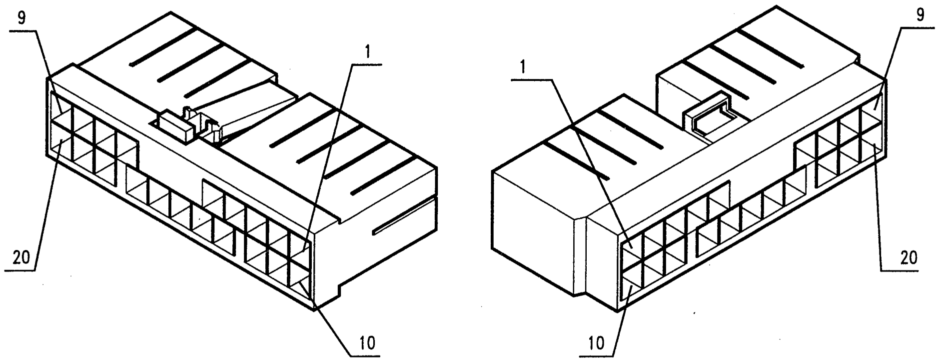

- 1 LTB-WHT • G23
- 2 YEL-RED ◇
  - YEL-RED • G21
  - YEL-RED • G23
- 3 GRY-RED • G21
- 4 1BLK • G148b
- 5 ORN-WHT ◇ 1ORN-BLU • G1 G
- 6 GRY-GRN • G23
- 7 BLK ◇ 1.5BLK • G148b
- 8 GRY-GRN • G21
- 9 BLK • G99
- 10 YEL • G99
- 11 1WHT-BLK • G148b
- 12 1RED ◇ 1.5BLU-RED • G1 H
- 13 1YEL-BLK ◇ YEL-BLK • G1 H
- 14 YEL-BLK ◇ YEL-BLK • G1 D
- 15 1YEL-GRN ◇ YEL-BLK • G1 D
- 16 1.5GRY-YEL • G73
- 18 1.5YEL-GRN • G73
- 19 1.5BLK • G148b
- 20 1.5RED-BLK • I58

GTV

- 1 LTB-WHT • B36
- 2 YEL-RED • B36
- 3 GRY-RED • B36
- 4 1BLK • B69
- 5 ORN-WHT • B36
- 6 GRY-GRN • B36
- 7 BLK • B36
- 8 GRY-GRN • B36
- 9 1BLK • B69
- 10 YEL • B69
- 11 1WHT-BLK • 06
- 12 1RED • 06
- 13 1YEL-BLK • B69
- 14 YEL-BLK • 06
- 15 YEL-GRN ◇
  - YEL-GRN • B36
  - YEL-GRN • B69
- 16 1.5GRY-YEL • B47
- 18 1.5YEL-GRN • B47
- 19 1.5BLK ◇
  - 1.5BLK • B47
  - 1.5BLK-PPL • B47
- 20 1.5RED-BLK • B47

GTV

Connector for dashboard wiring/engine wiring	G99

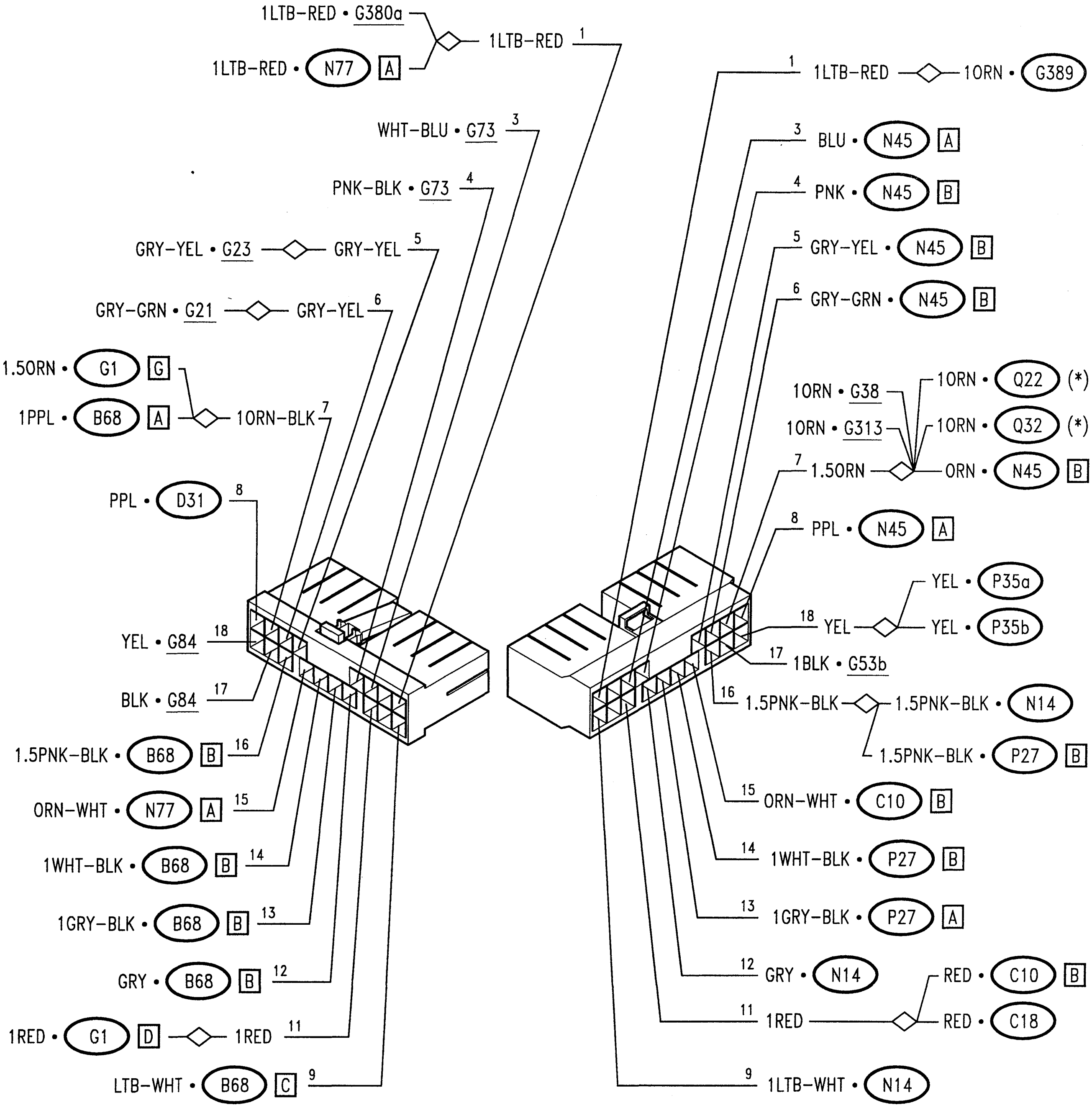

(*) from chassis no.6023907

ABS system connector	**G124**

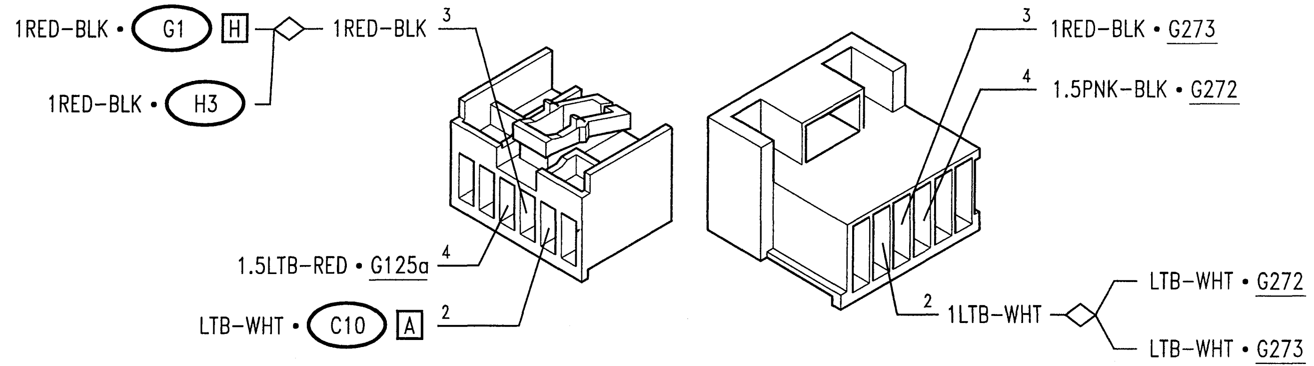

ABS system fuse	G125a	ABS system fuse	G125b

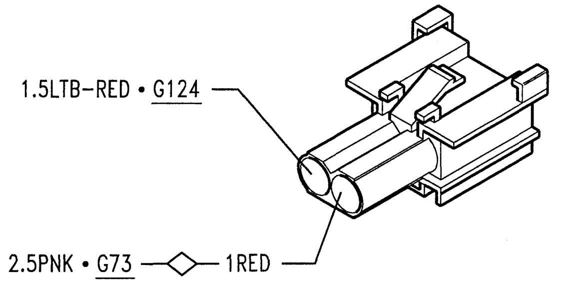

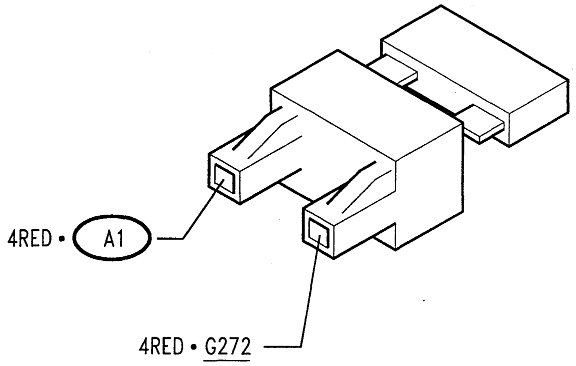

Earth on upper cover	**G131a**	Earth on upper cover	**G131b**

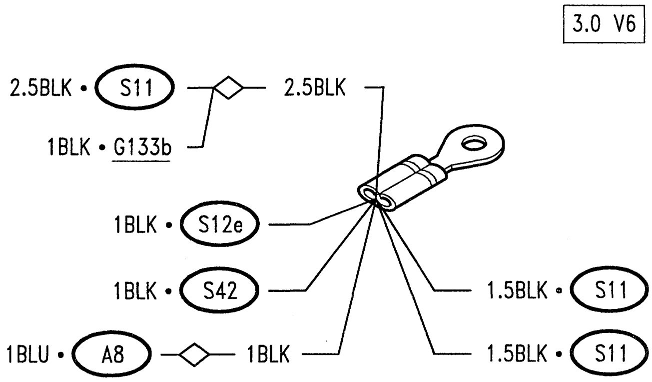

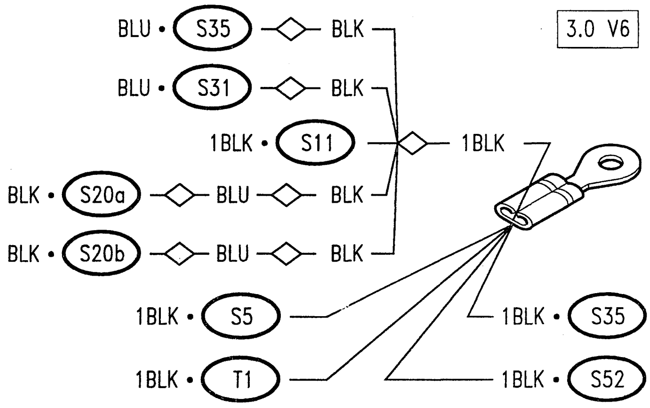

Connector for electronic injection wiring A	**G133a**

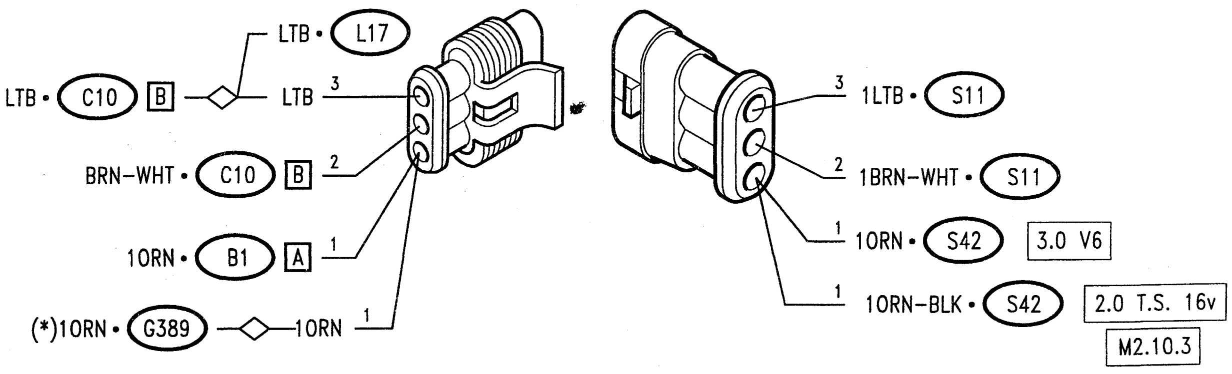

(*) from chassis no___

Connector for electronic injection wiring A

G133a

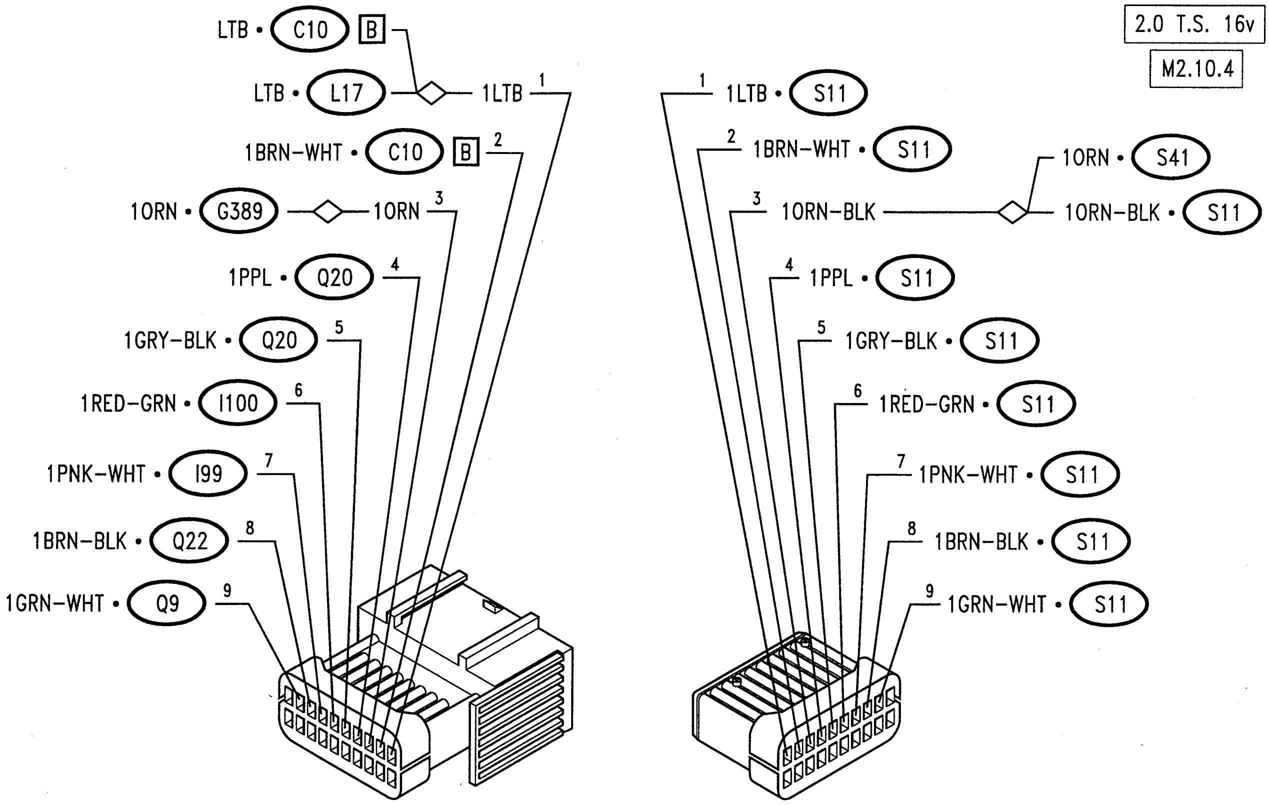

Connector for electronic injection wiring B

G133b

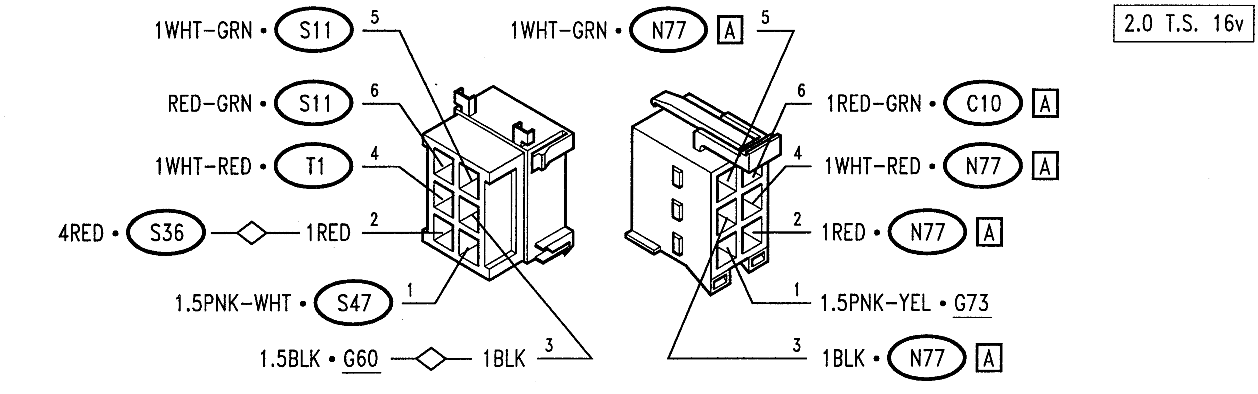

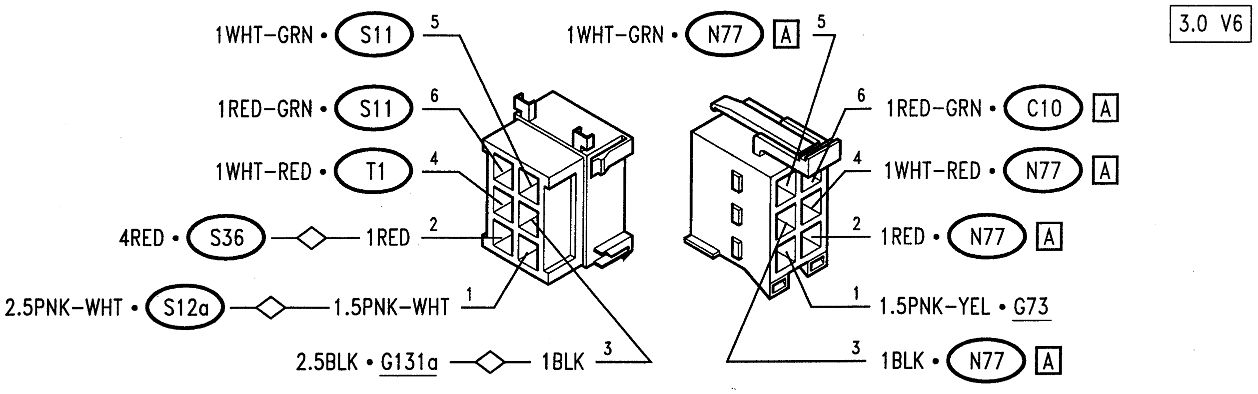

Earth under dashboard LH

G148b

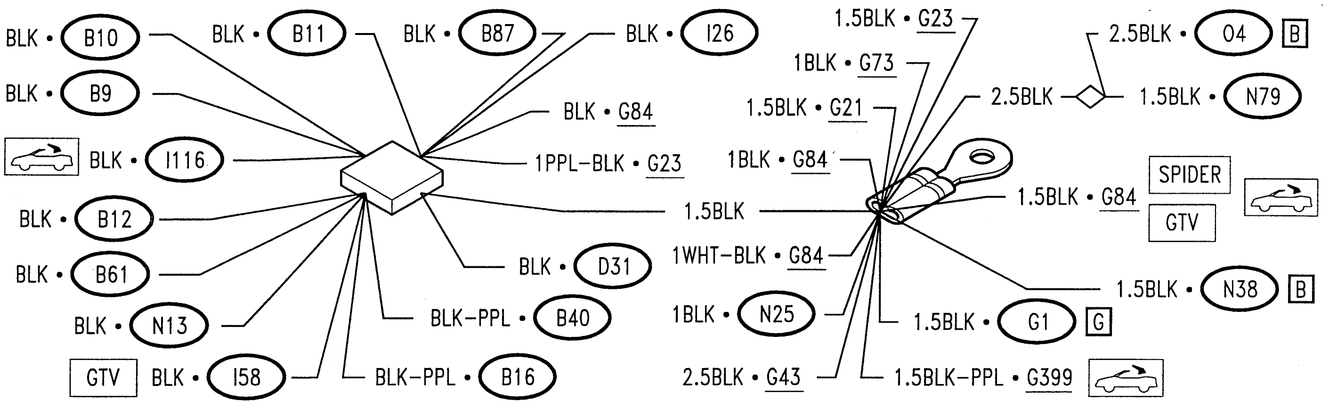

Connector for electric aerial wiring

G193

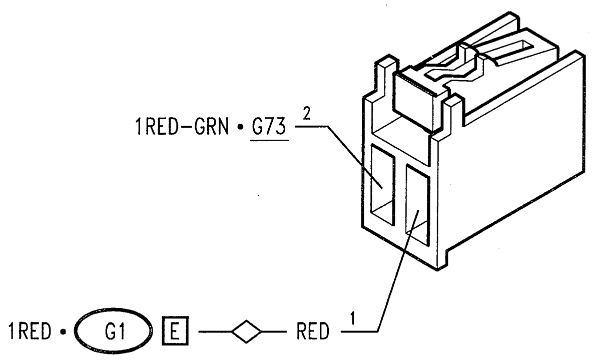

Connector for ABS system earth

G202

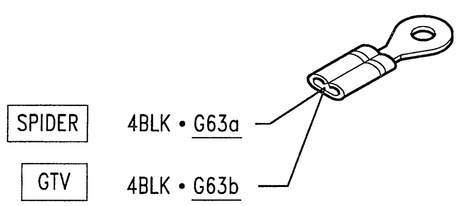

Connector for sun roof

G219

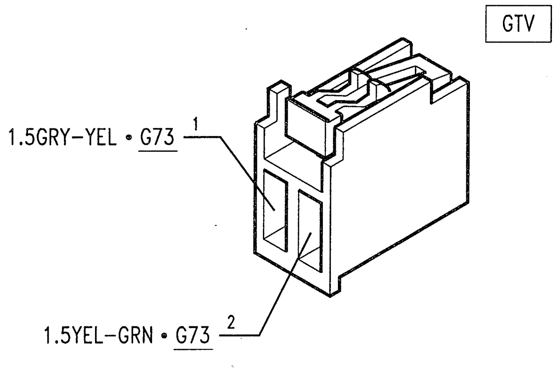

Fuse for engine fan

G254

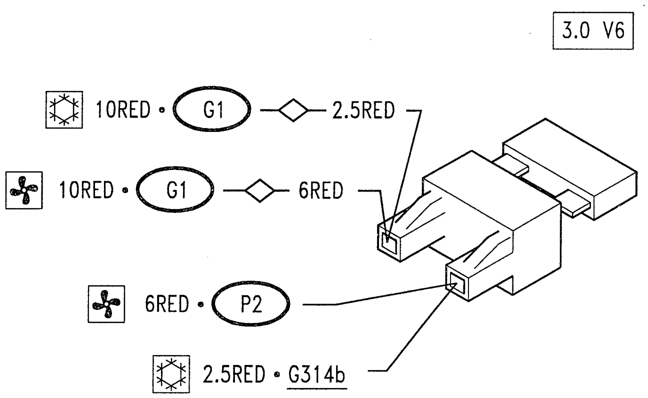

Fuse for engine fan

G254

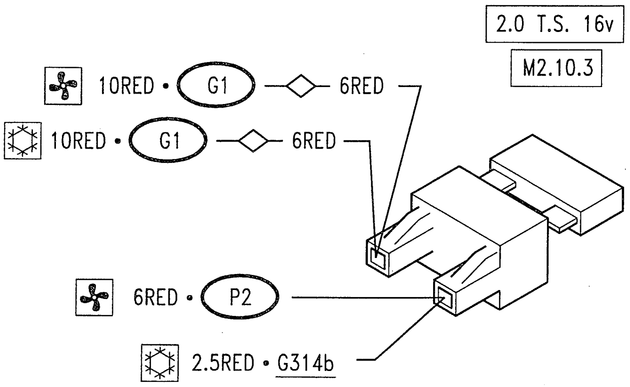

Fuse for engine fan

G254

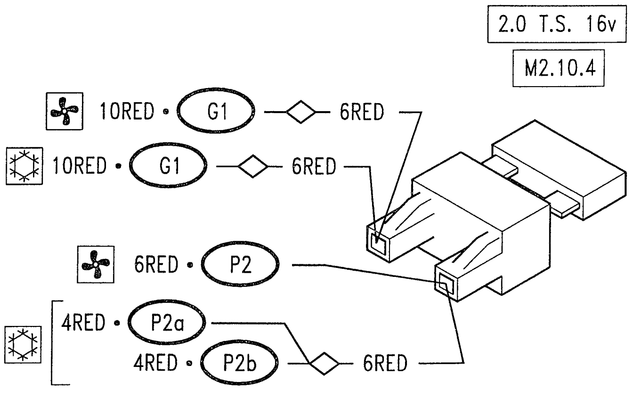

Fuse for heating and ventilation fan — G255

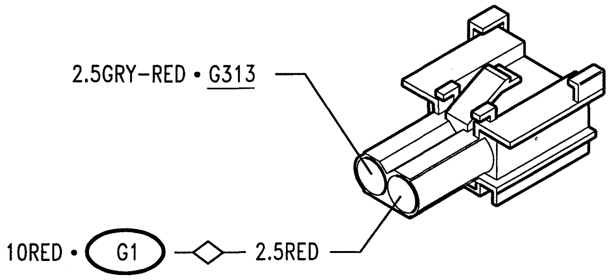

Fuse for sun roof — G261

GTV

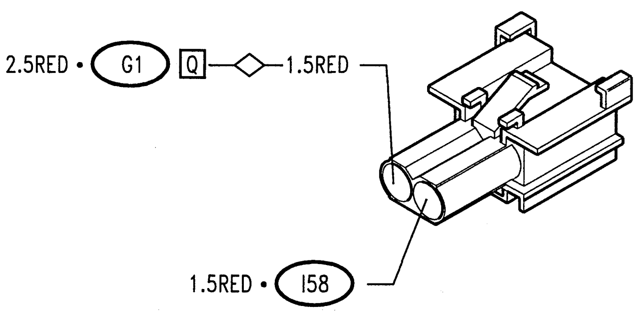

Connector for ABS hydraulic unit — G272

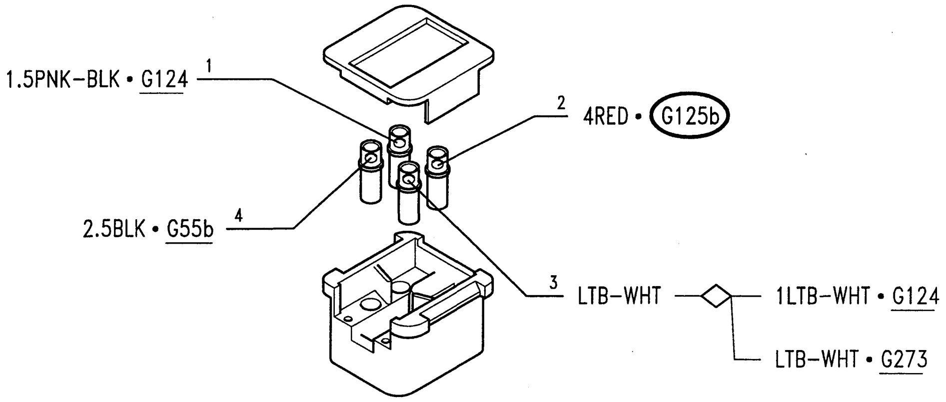

ABS control unit connector — G273

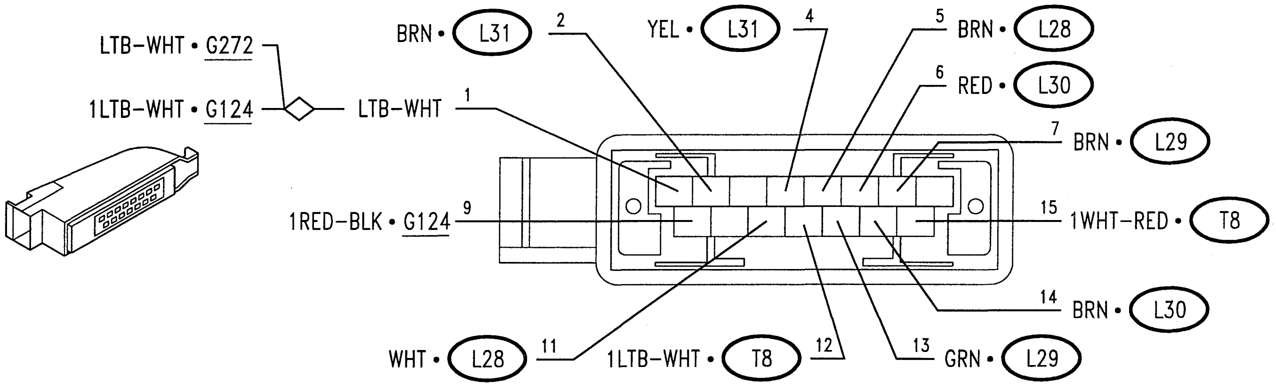

Connector for engine sensors — G308

2.0 T.S. 16v

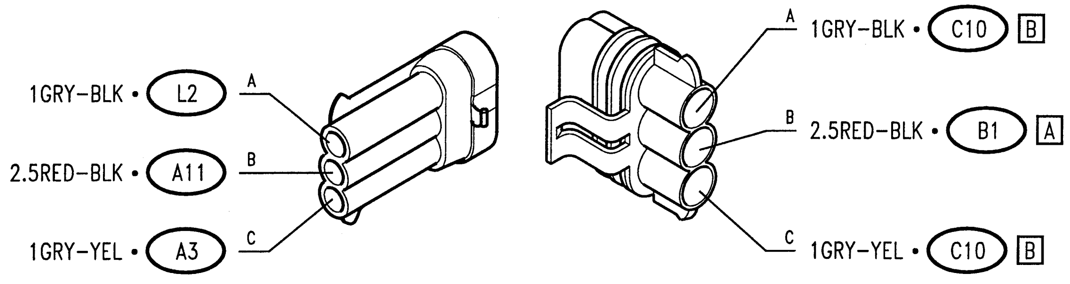

3.0 V6

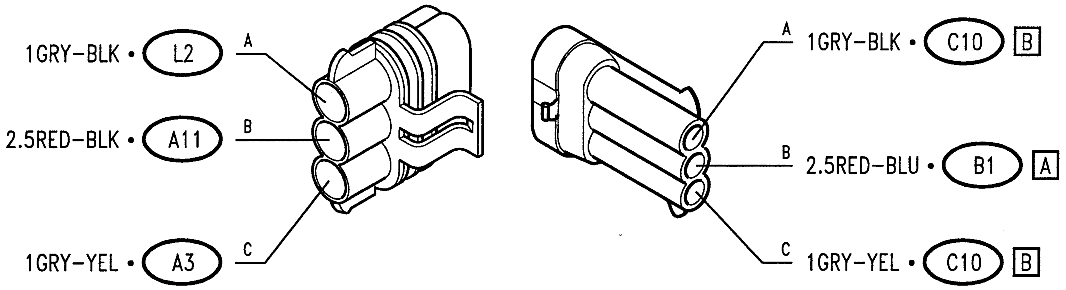

Fuse for RH front power window — G310

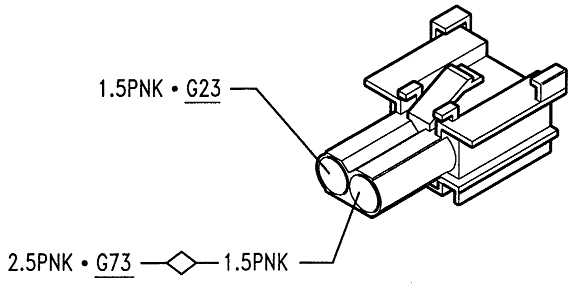

Fuse for LH front power window — G311

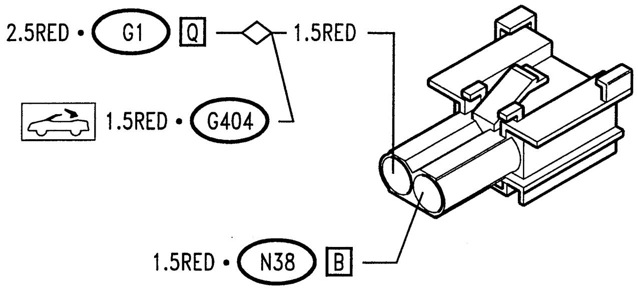

Connector for additional conditioner wiring — G313

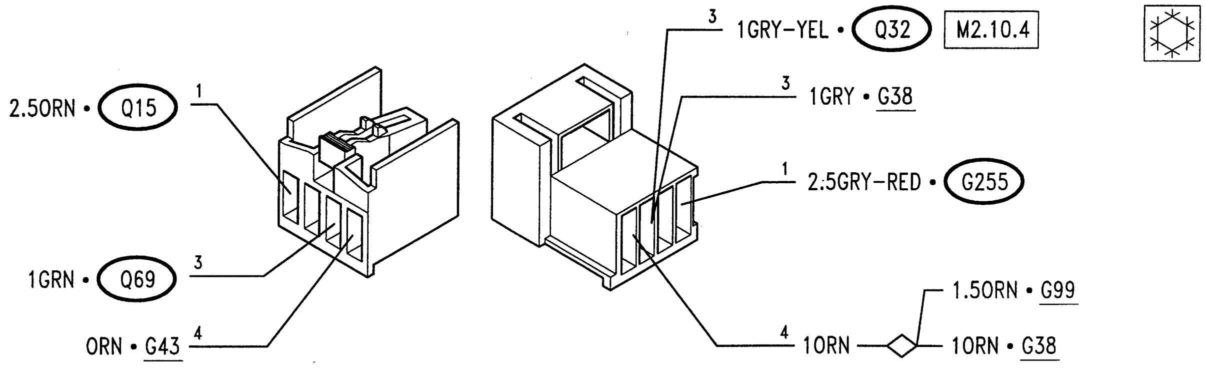

Connector for engine wiring / conditioner wiring A

G314a

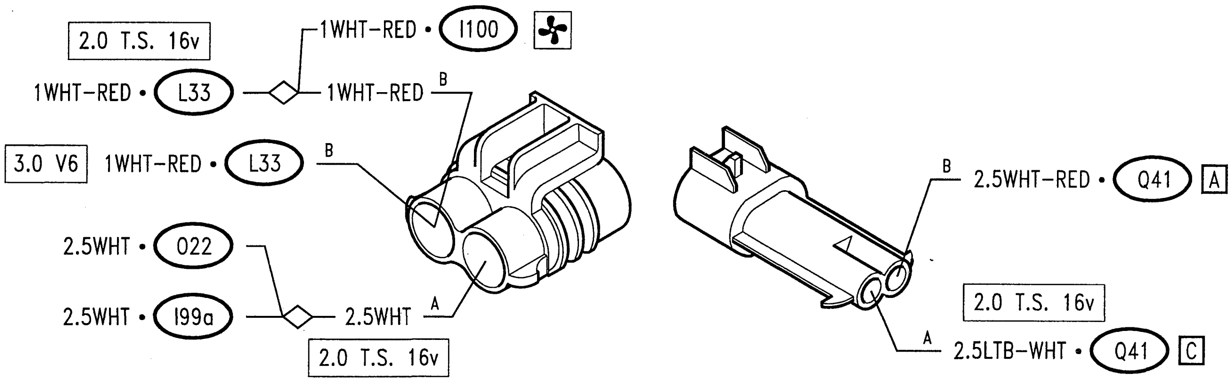

Connector for engine wiring / conditioner wiring B

G314b

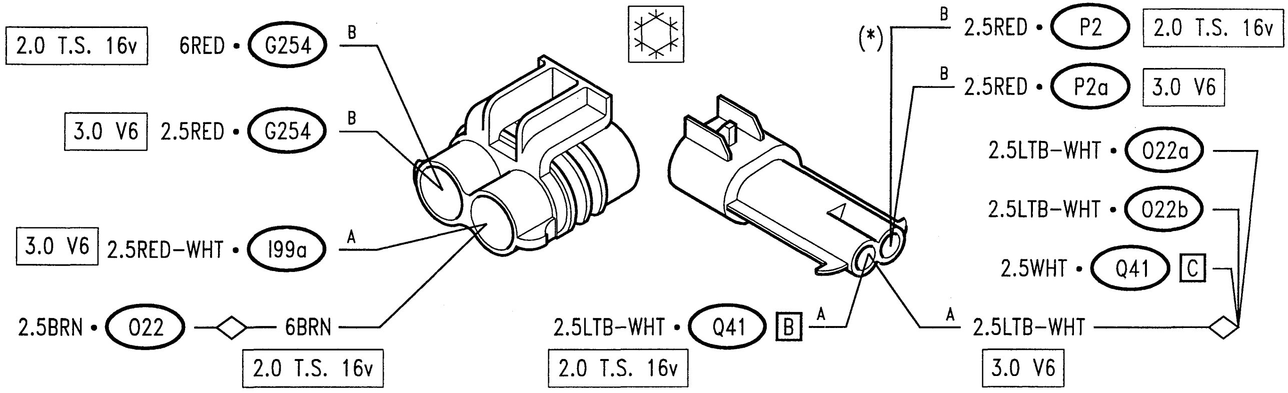

Connector for rear loudspeaker cables

G320

GTV

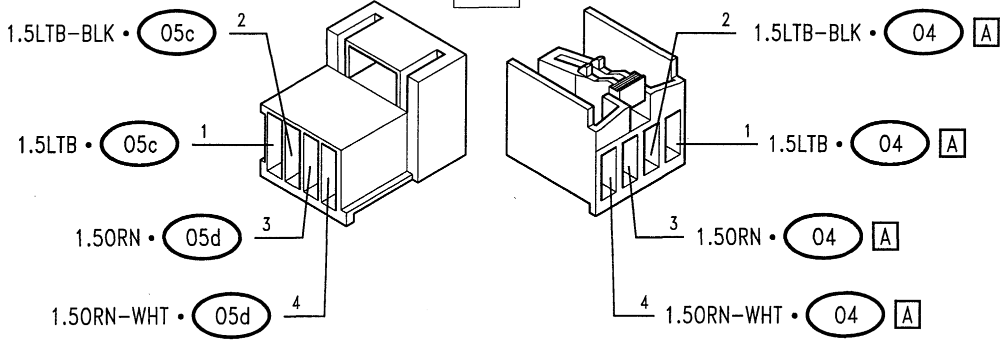

SPIDER

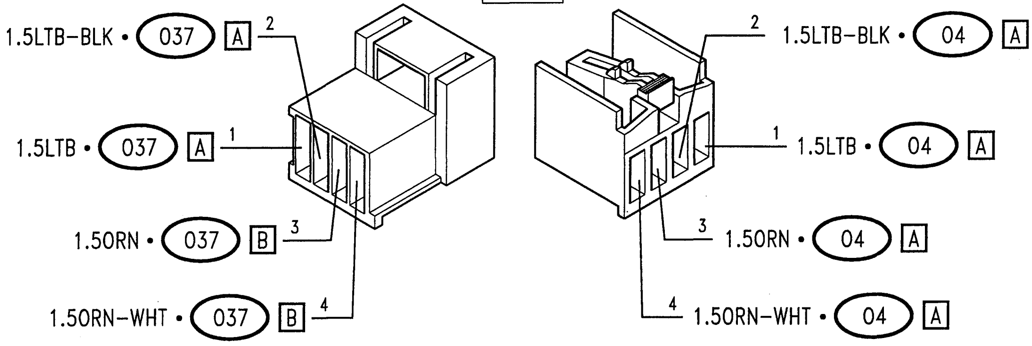

(*) from chassis n°___
PA497200000005

Connector for conditioner syst./injection syst.

G337

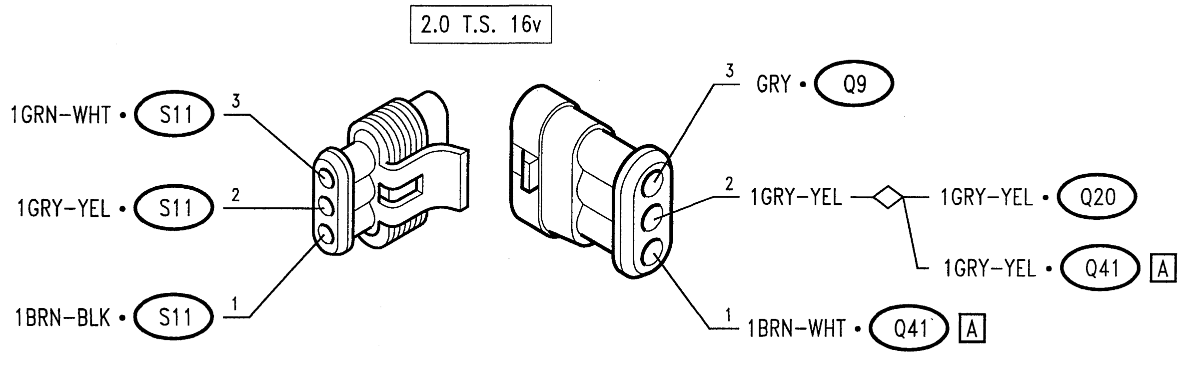

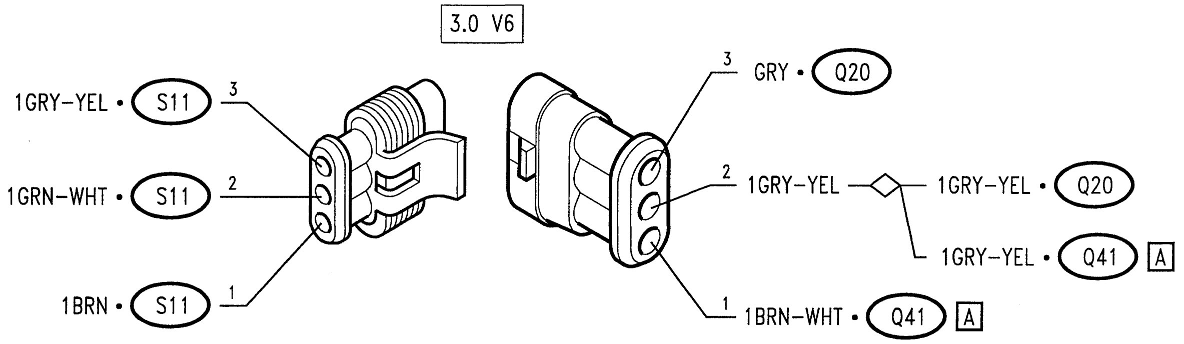

Airbag connector

G380

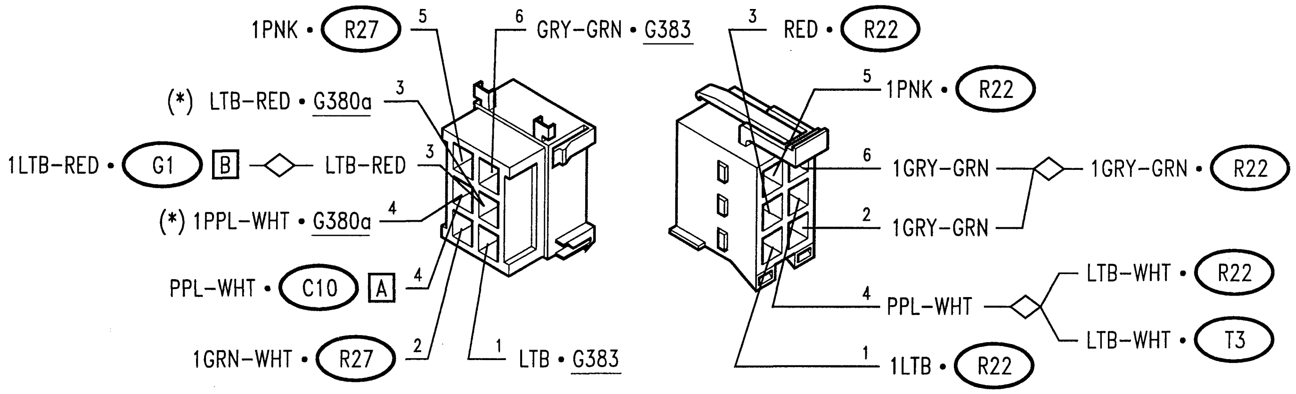

Airbag connector (*)

G380a

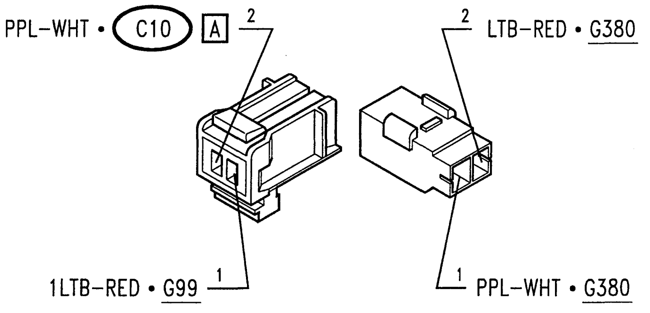

Airbag connector (•)

G380

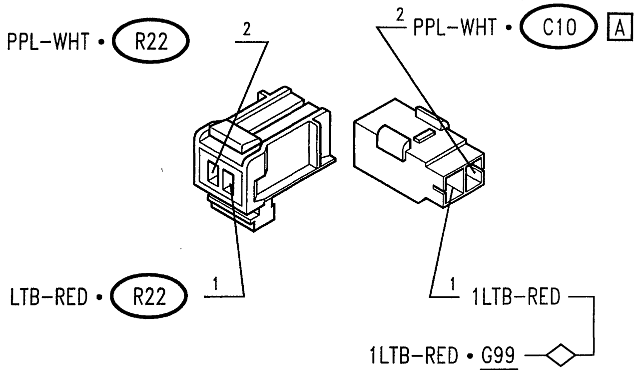

(*) from chassis n°___

(•) from chassis n°6016879

Earth for airbag G381

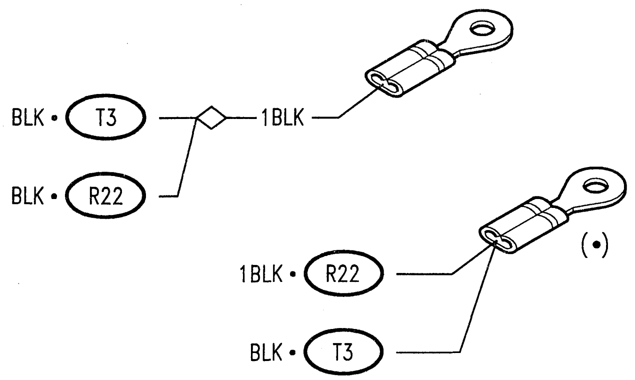

Connector for airbag capsule G383

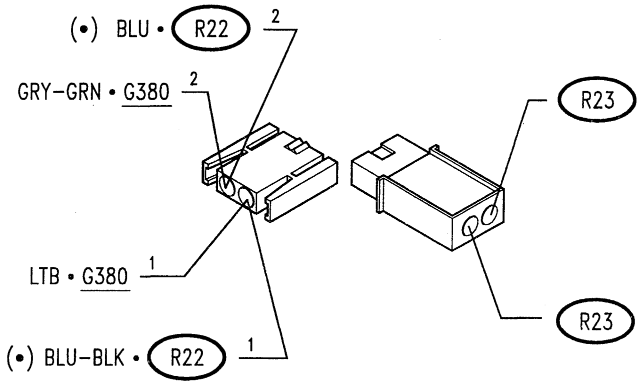

Services supply fuse G384

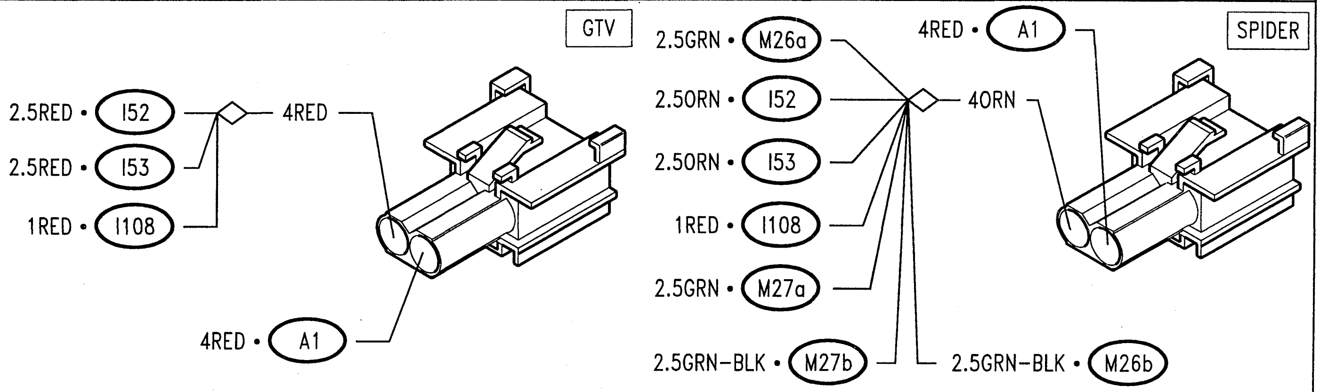

Connector for wiring in front bumper G385

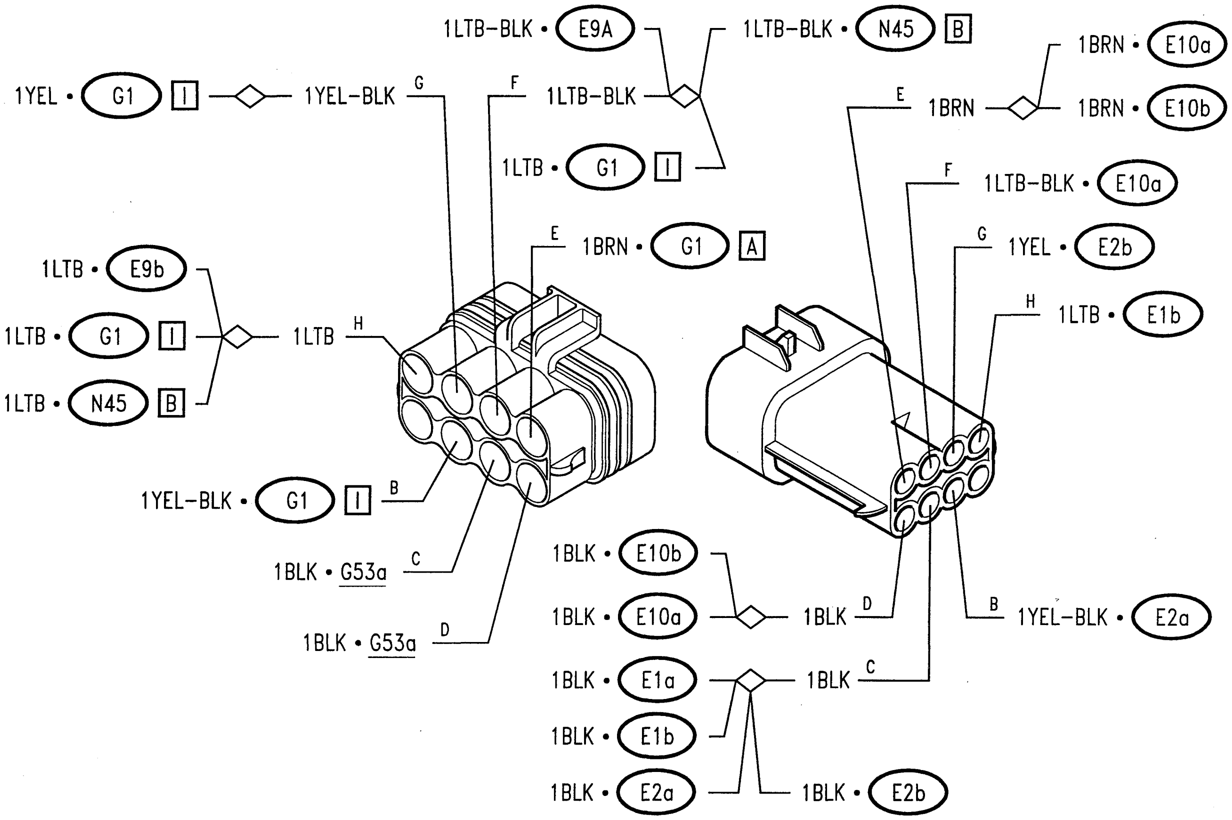

(•) from chassis n°6016879

Fuse for ALFA ROMEO CODE unit — G389

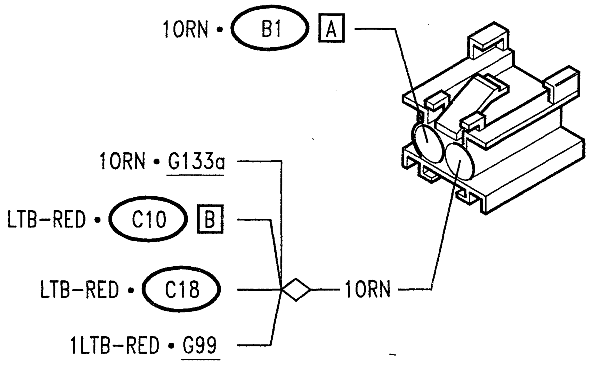

Rear fog guard fuse — G391

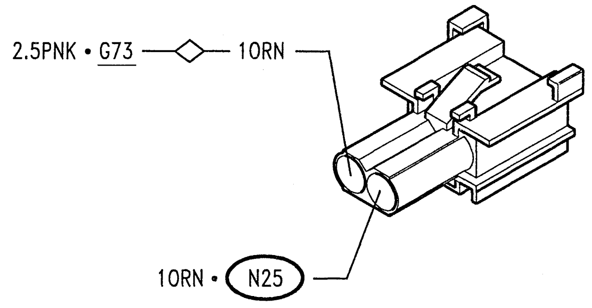

Dashboard connector for automatic hood — G399

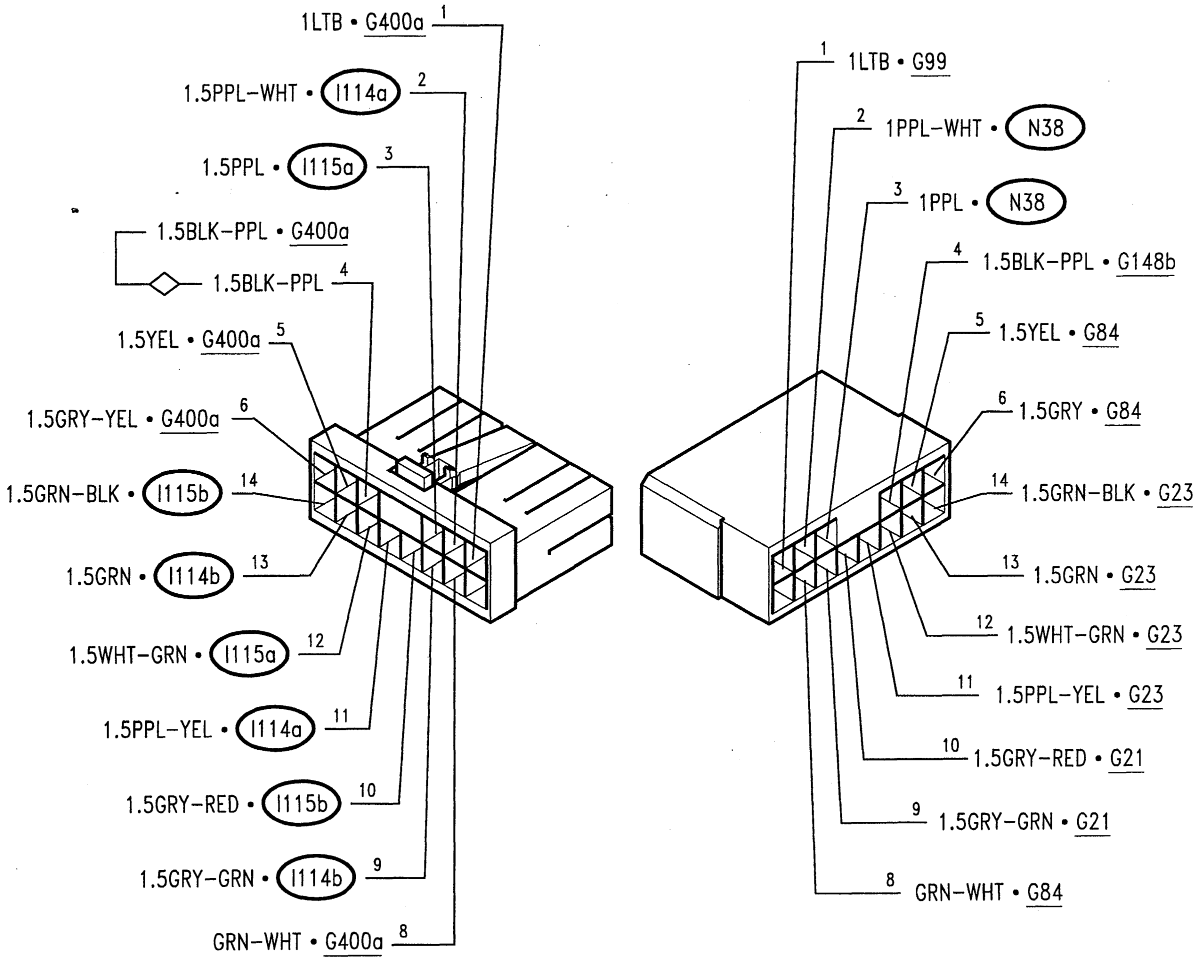

Rear connector for automatic hood	**G400a**

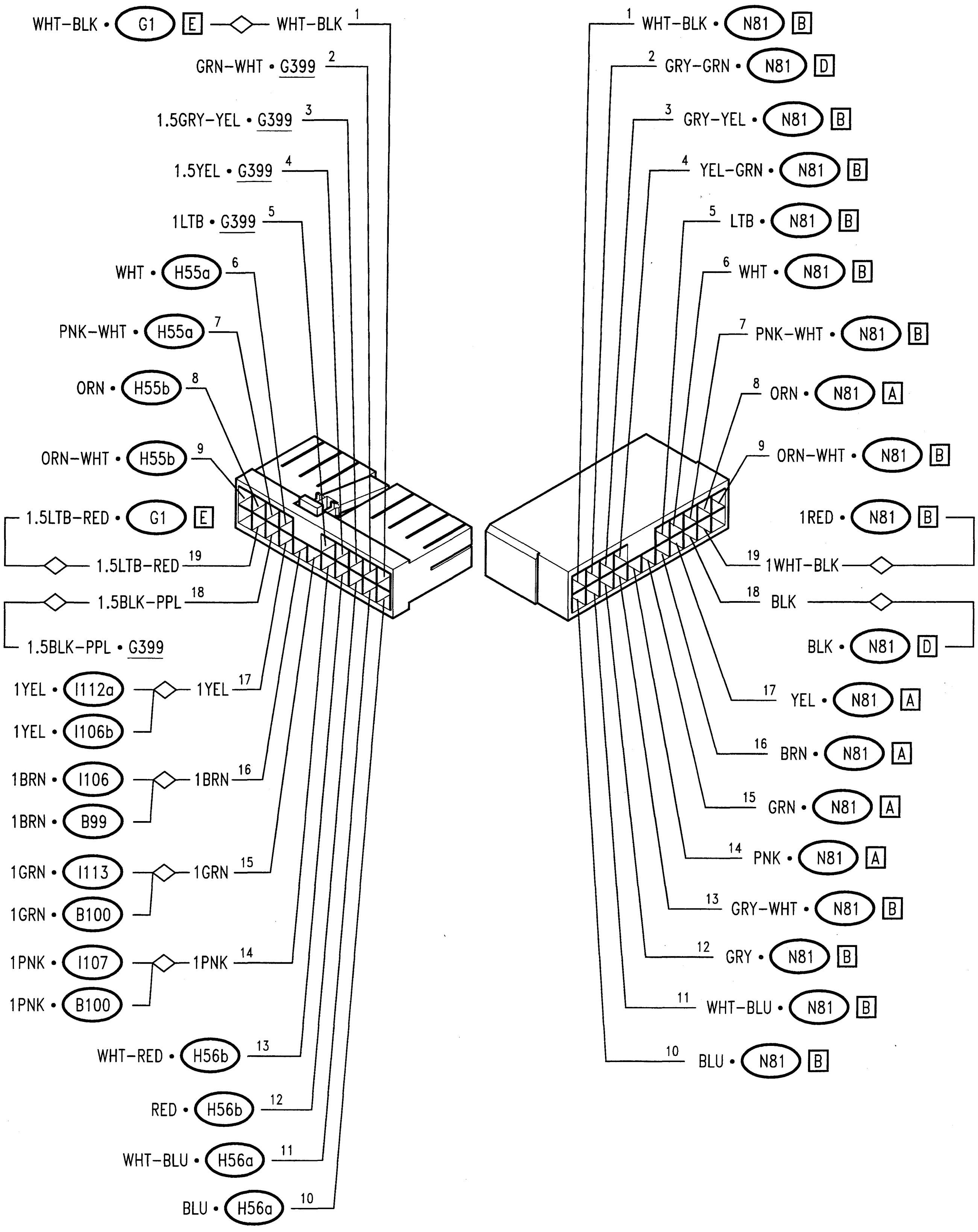

Rear connector for automatic hood **G400b**

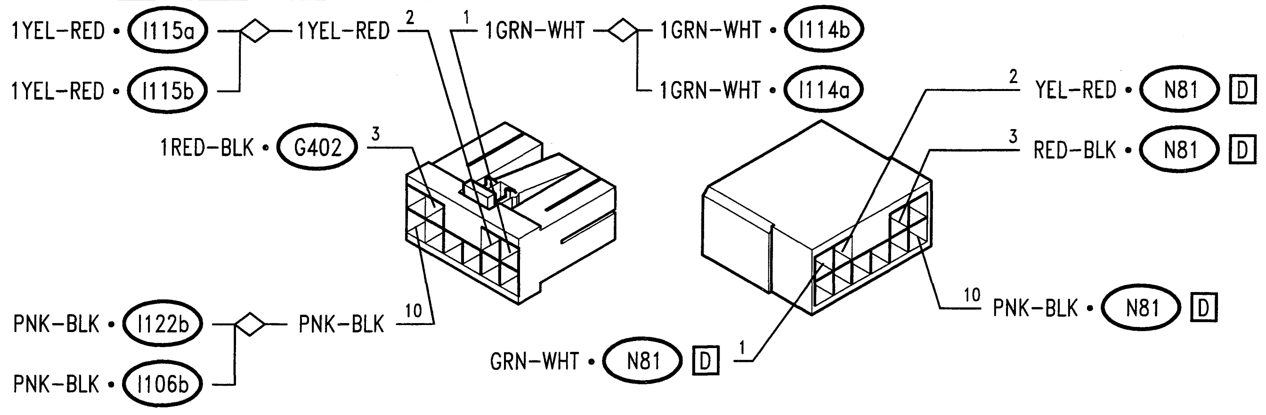

Rear connector for automatic hood **G400c**

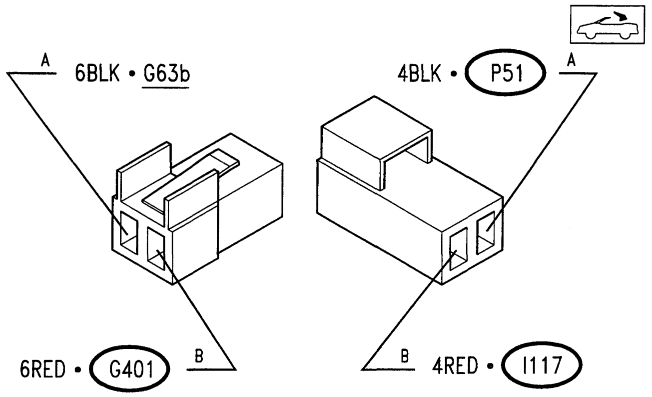

Fuse for automatic hood system **G401**

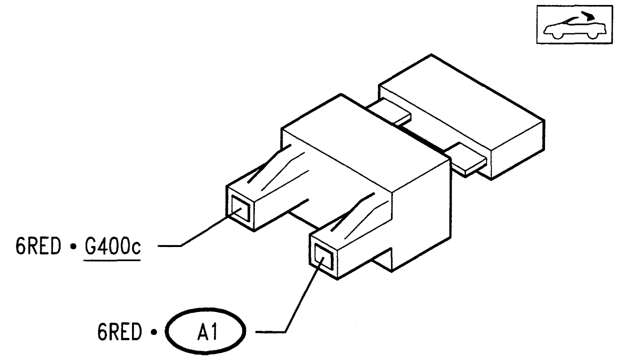

Fuse for automatic hood control unit **G402**

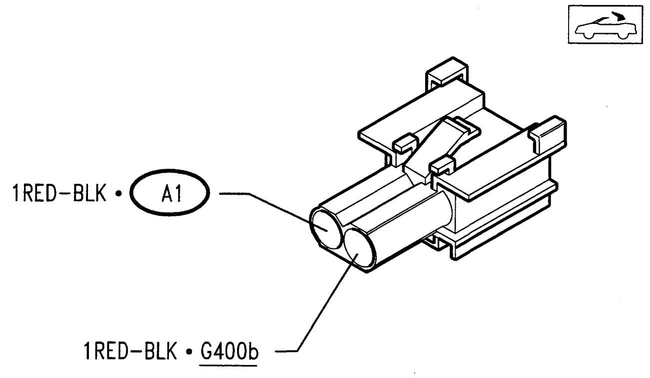

Fuse for automatic hood switch **G403**

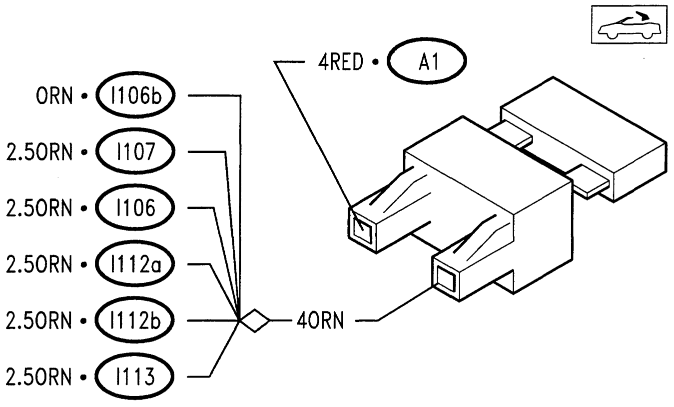

Fuse for automatic hood switch **G404**

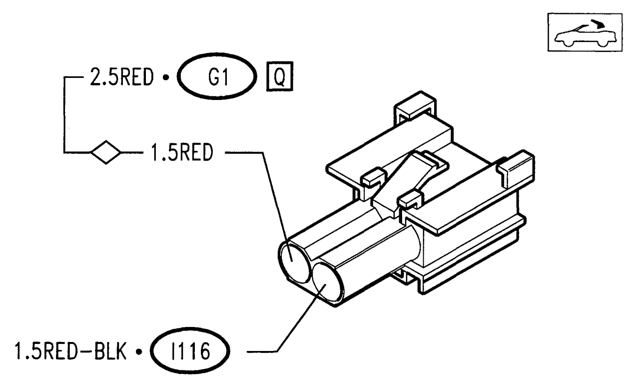

Automatic hood power window opening fuse **G405**

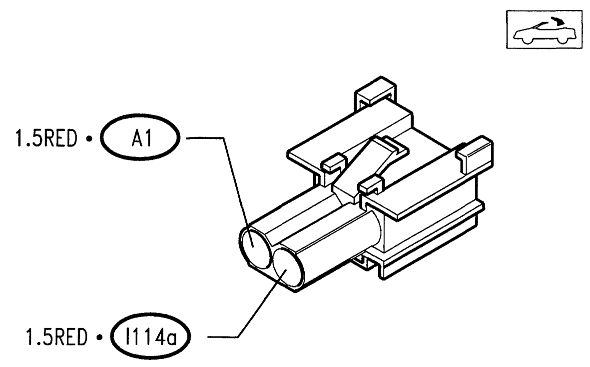

Automatic hood power window closing fuse — G406

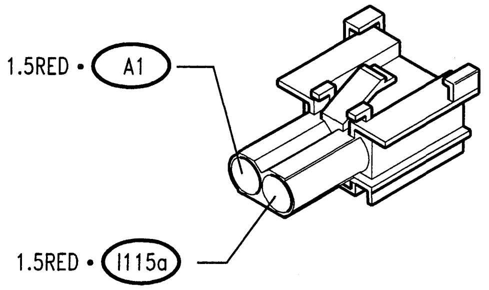

Handbrake switch — H1

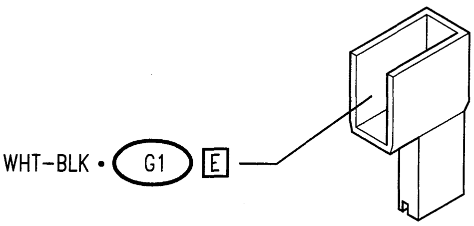

Reversing light switch — H2

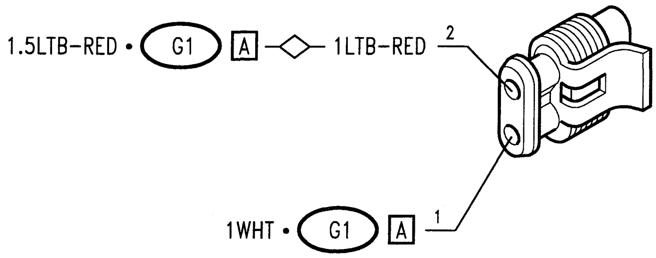

Stop lights switch — H3

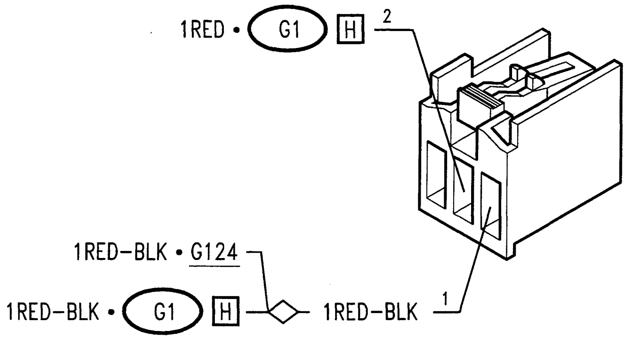

RH front brake pad switch — H9

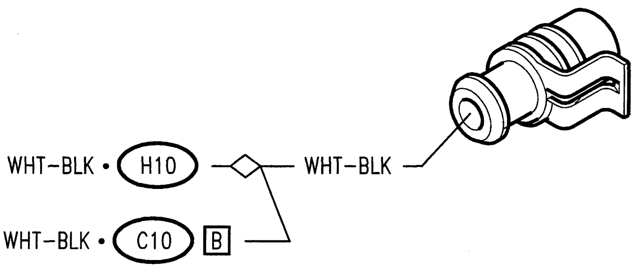

LH front brake pad switch — H10

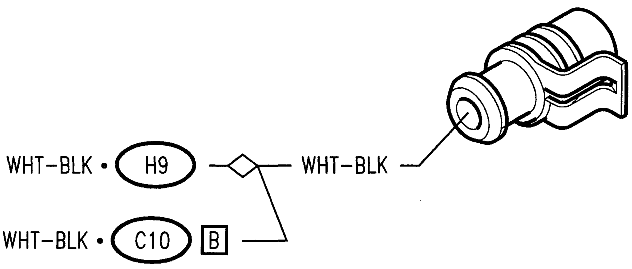

Brake fluid minimum level switch — H17

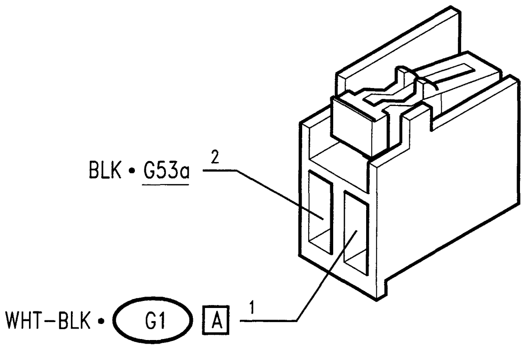

Inertial switch — H20

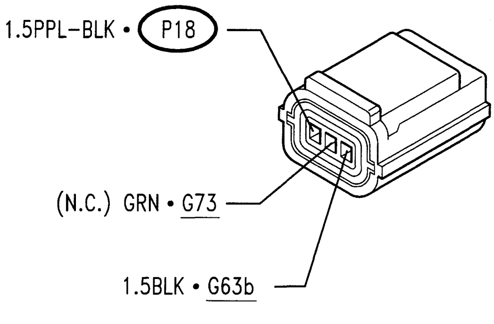

Luggage compartment light switch H24

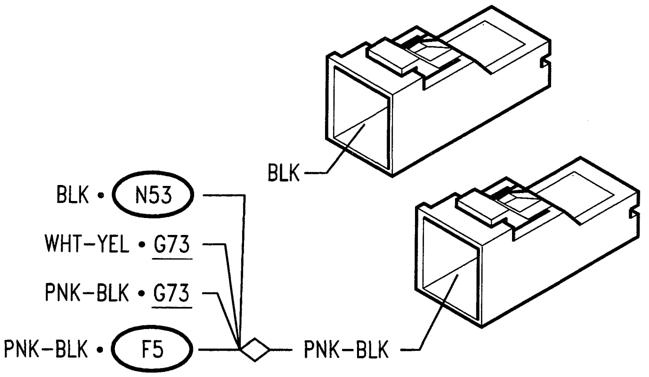

Luggage compartment light switch (*) H24

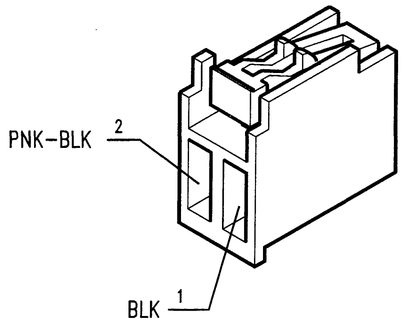

Bonnet anti-theft device switch H44

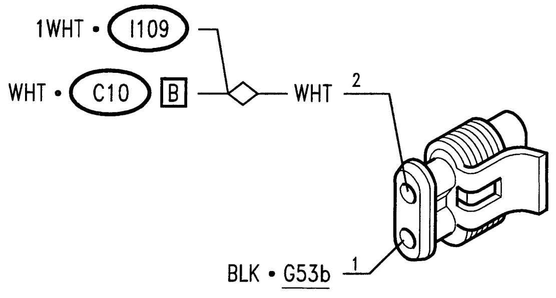

RH hood closing switch H55a

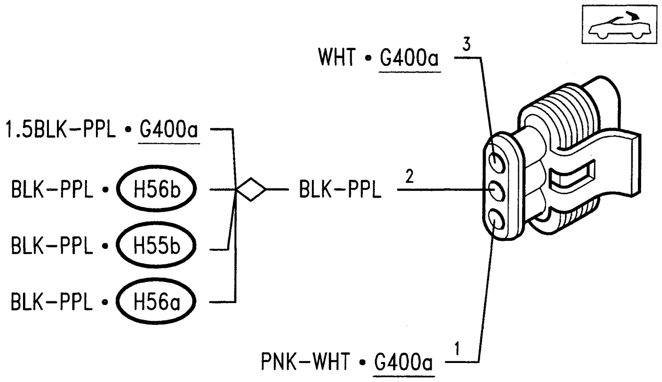

LH hood closing switch H55b

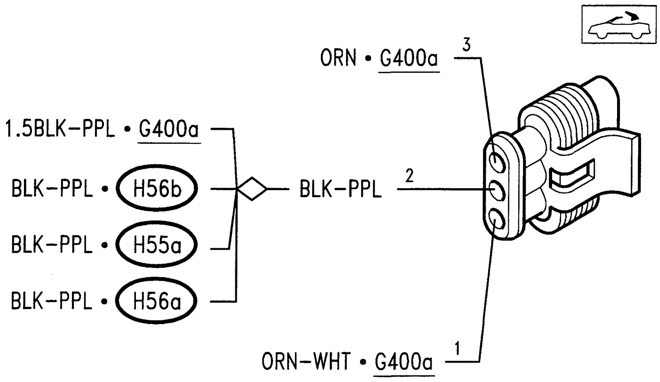

RH hood cover closing switch H56a

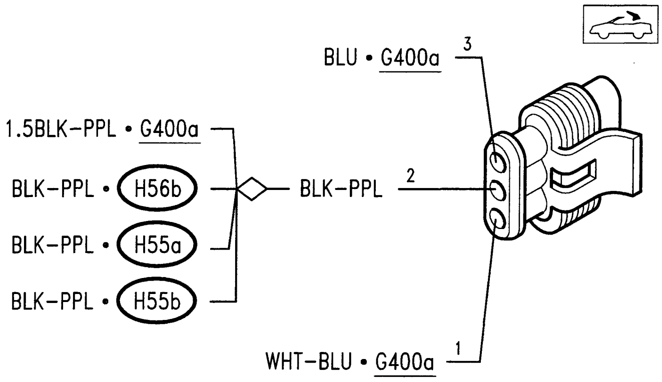

LH hood cover closing switch H56b

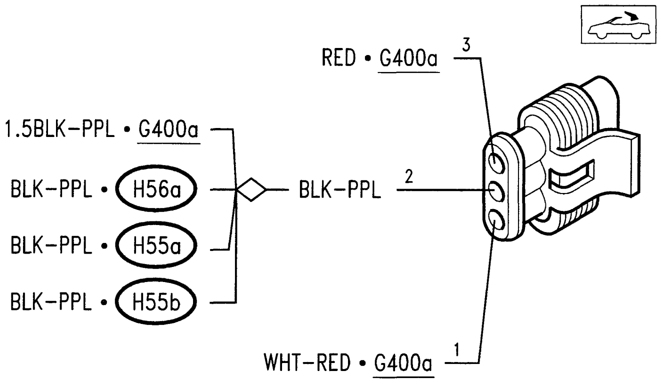

Intermediate "5th arc" switch H58

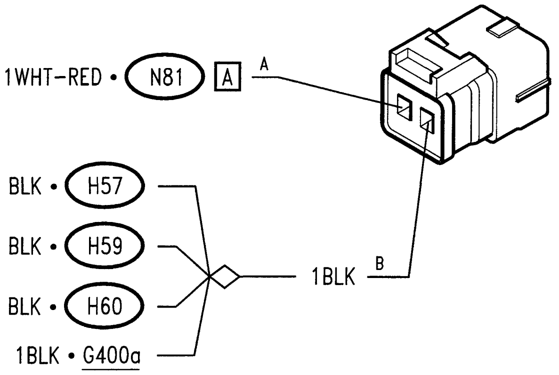

(*) from chassis no.___

Hood position switch

H60

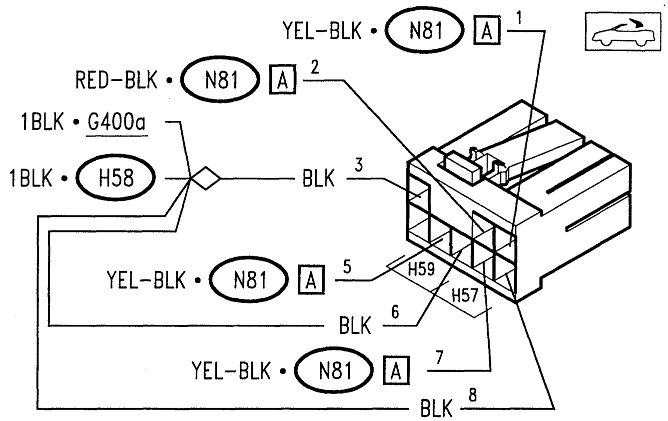

Ceiling light relay

I26

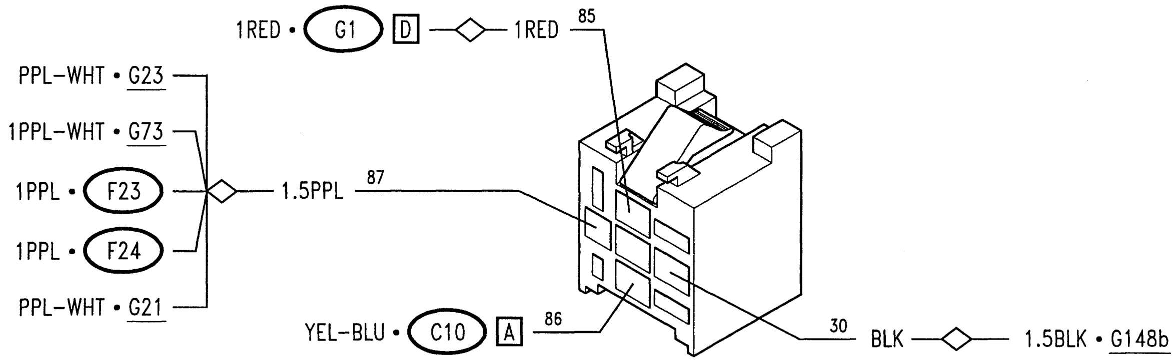

Luggage compartment opening relay

I52

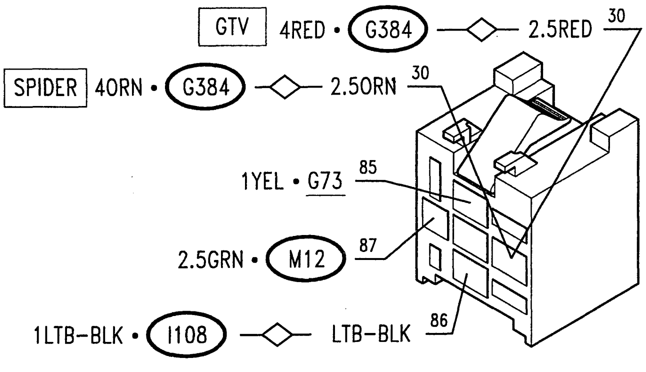

Fuel flap opening relay

I53

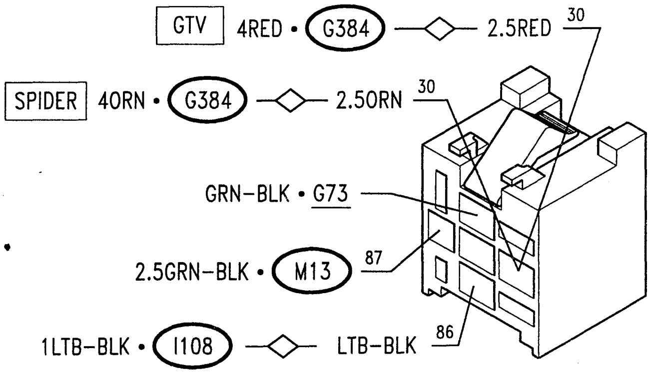

Sun roof relay

I58

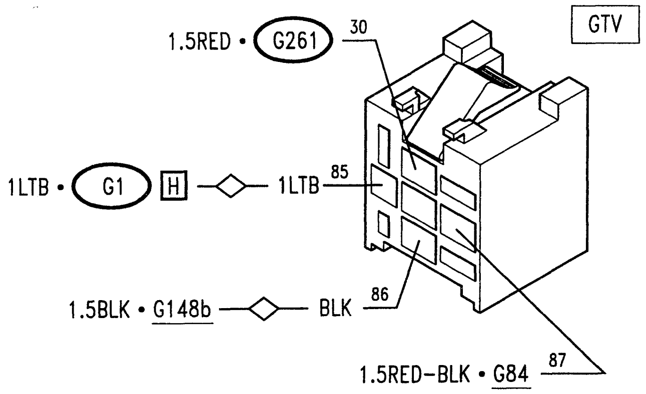

Engine cooling fan 1st speed relay (I99)

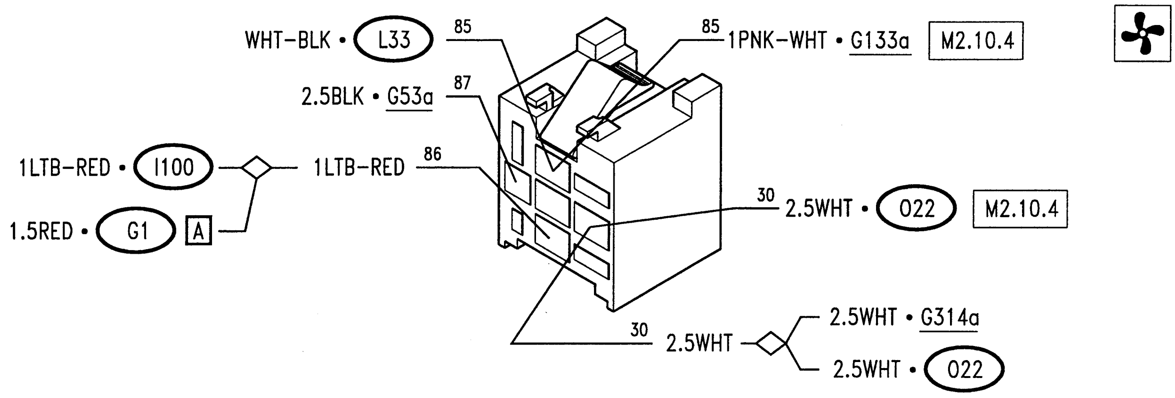

Engine cooling fan 1st speed relay (I99)

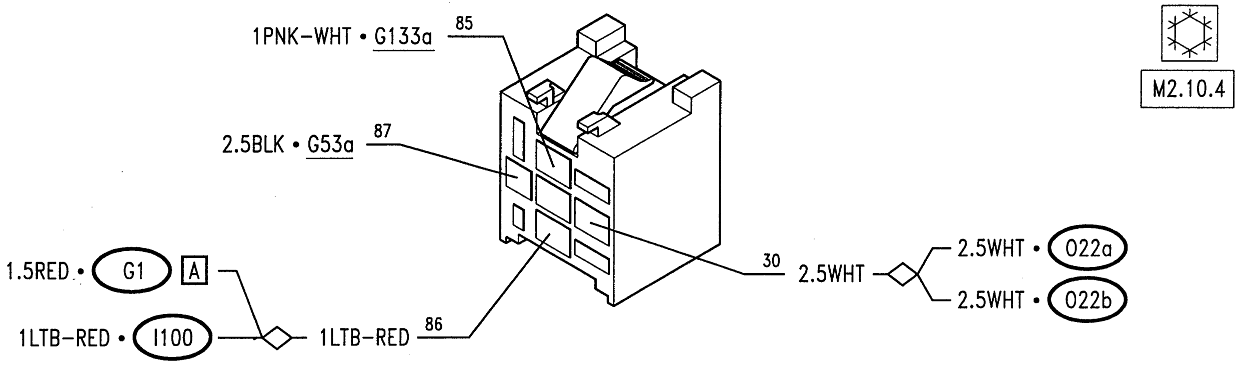

Engine cooling fan 1st speed relay (I99a)

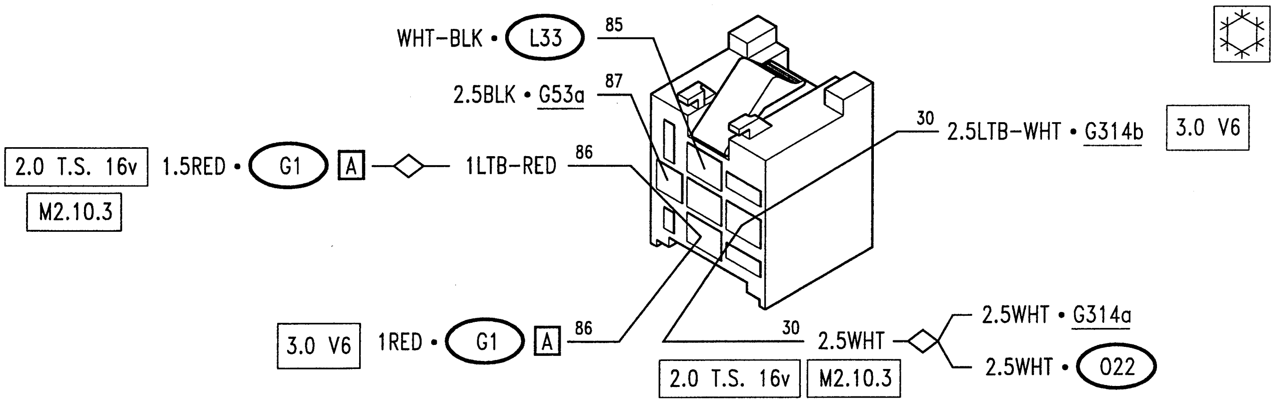

Engine cooling fan 2nd speed relay (I100)

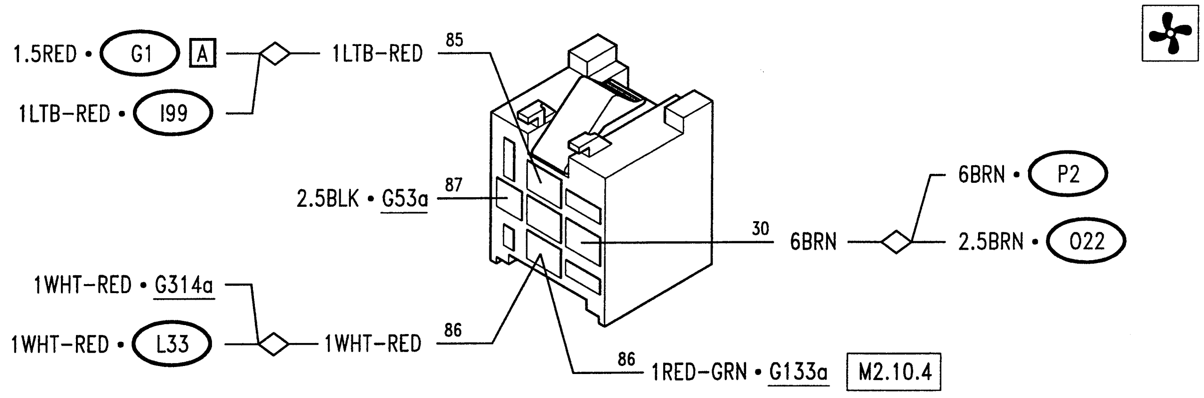

Engine cooling fan 2nd speed relay

I100

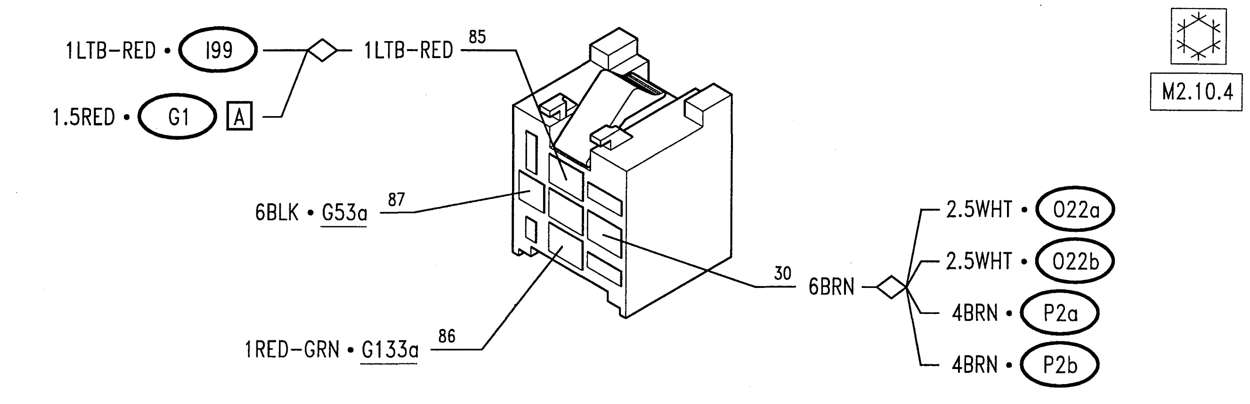

Hood release relay

I106

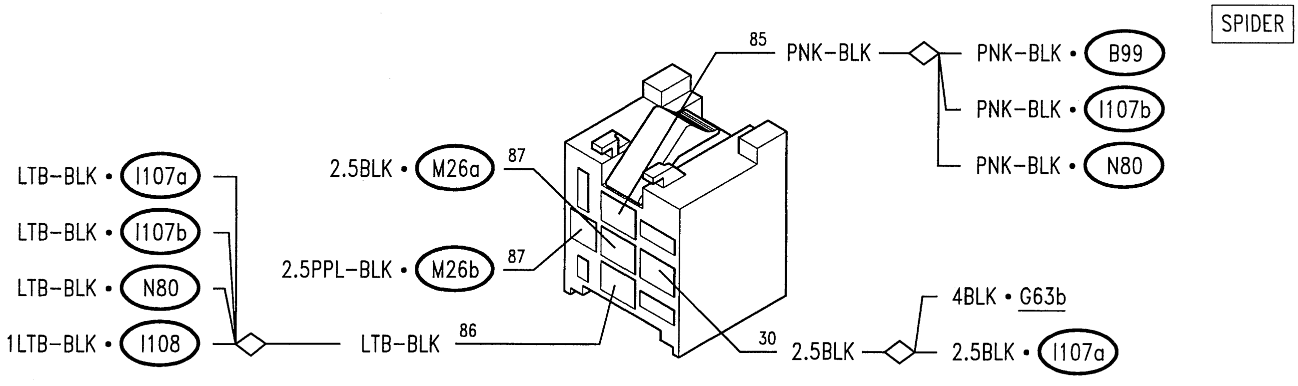

Hood emergency release relay

I106

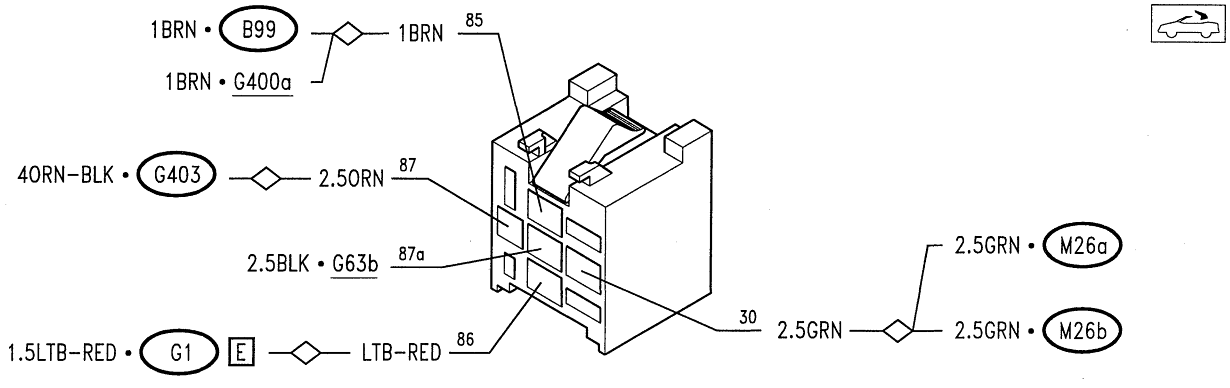

Hood emergency release relay

I106b

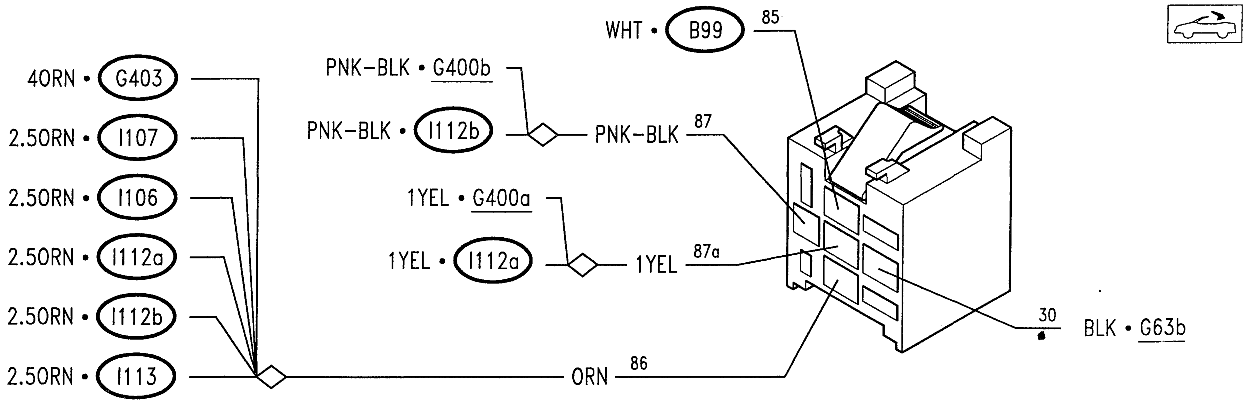

Hood cover release relay

I107

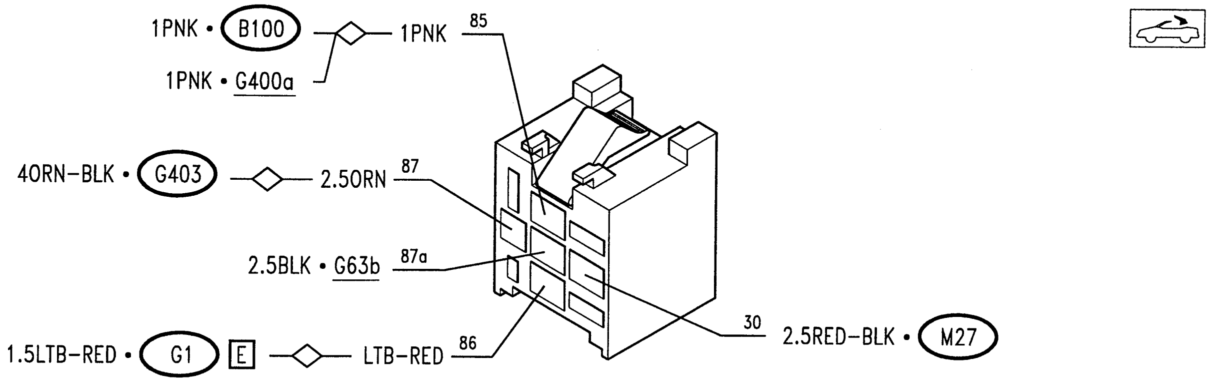

Hood cover release relay

I107a

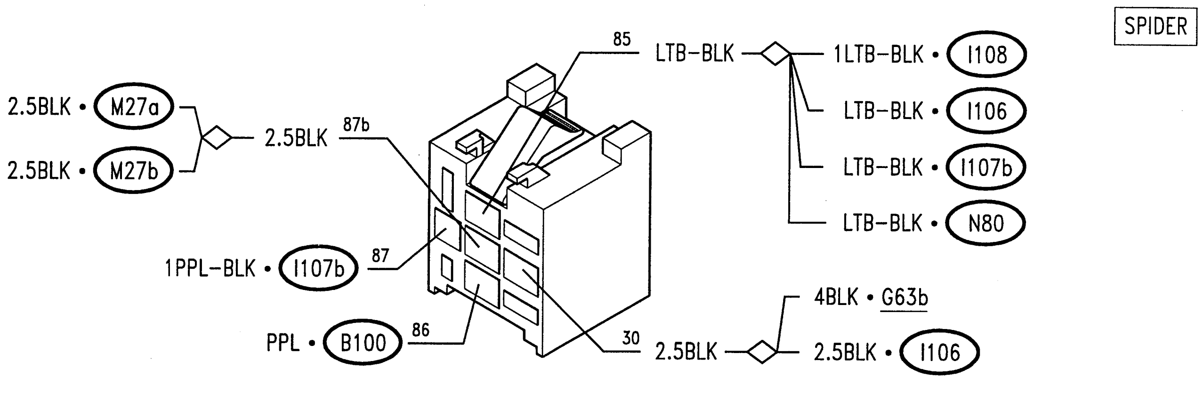

Hood cover release relay

I107b

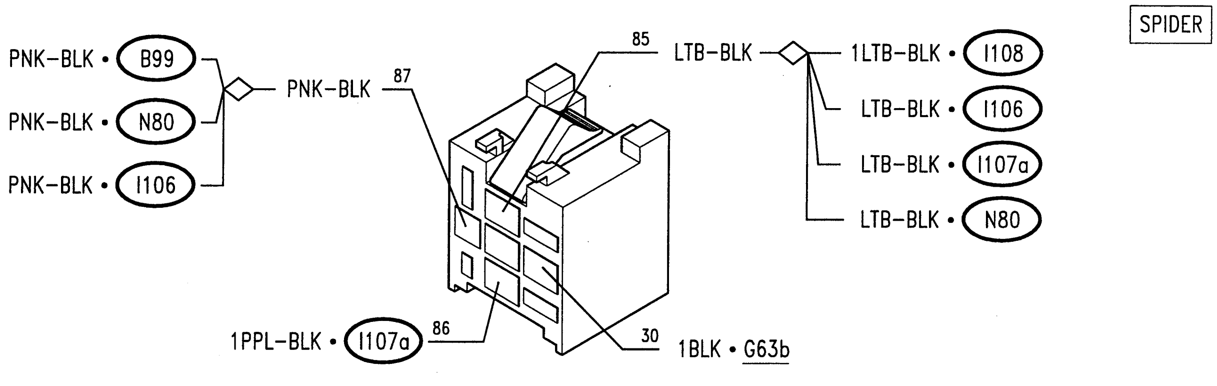

Key-operated supply cutoff relay

I108

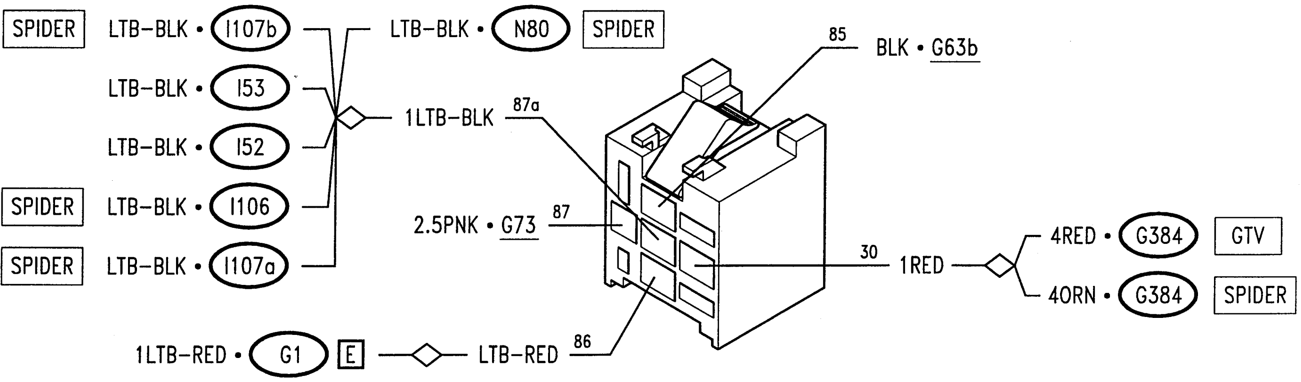

Anti-theft switch relay

I109

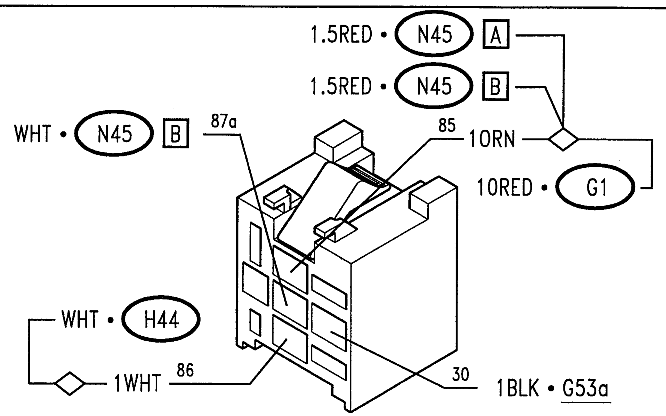

RH hood closing relay

I112a

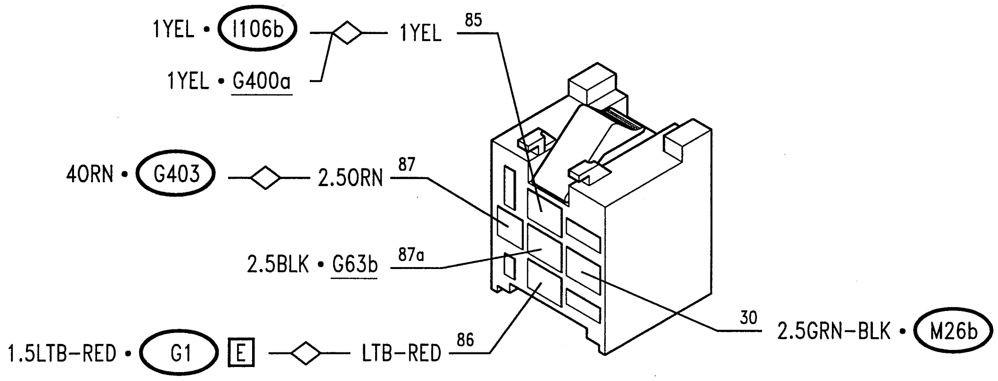

LH hood closing relay

I112b

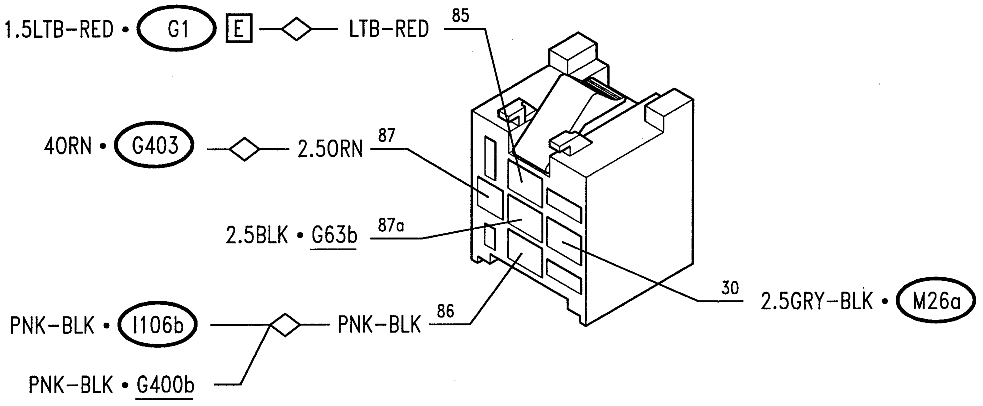

Hood cover closing relay

I113

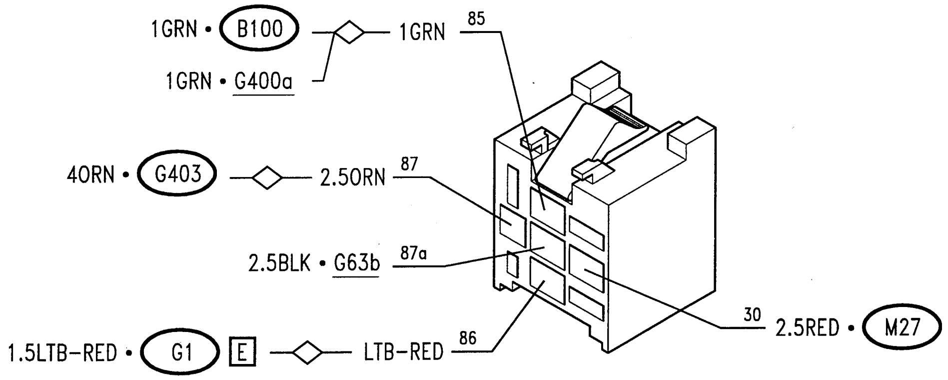

LH power window opening relay

I114a

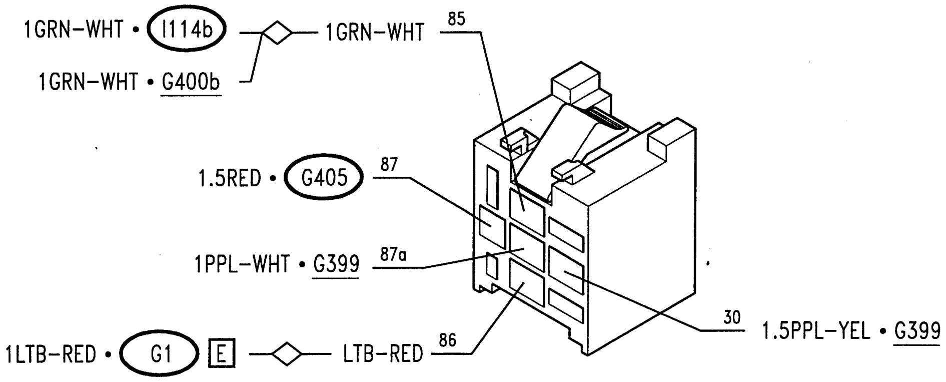

RH power window closing relay

I114b

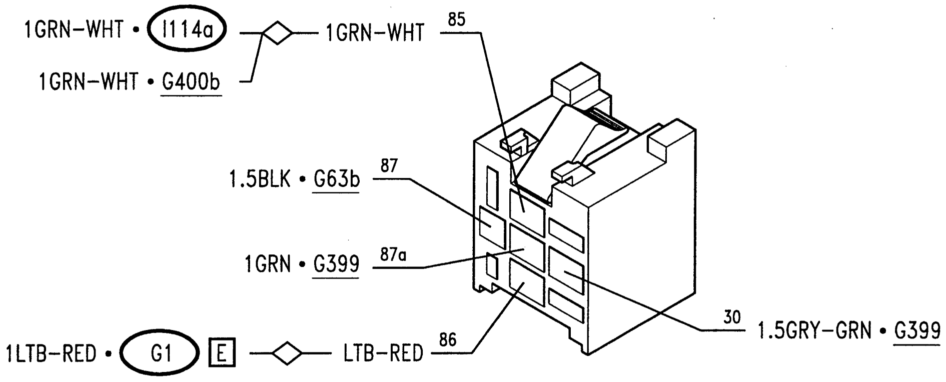

LH power window closing relay

I115a

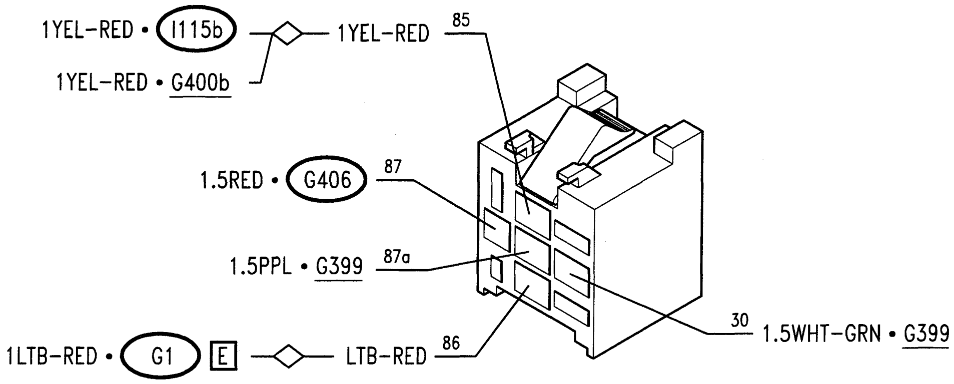

RH power window closing relay

I115b

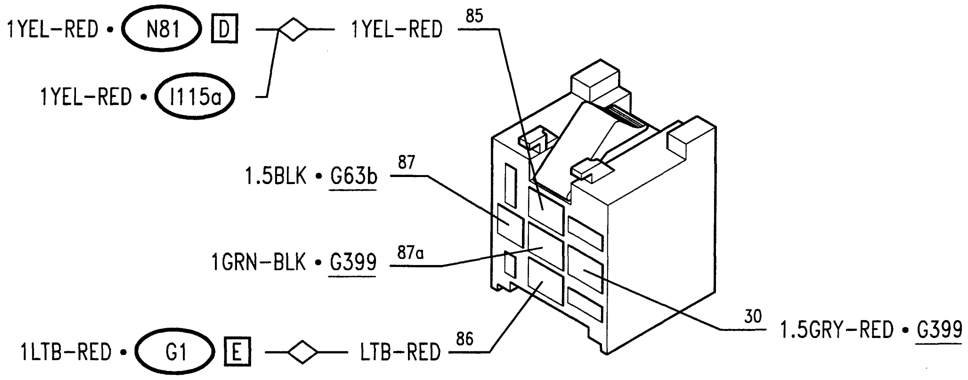

Automatic hood control relay

I116

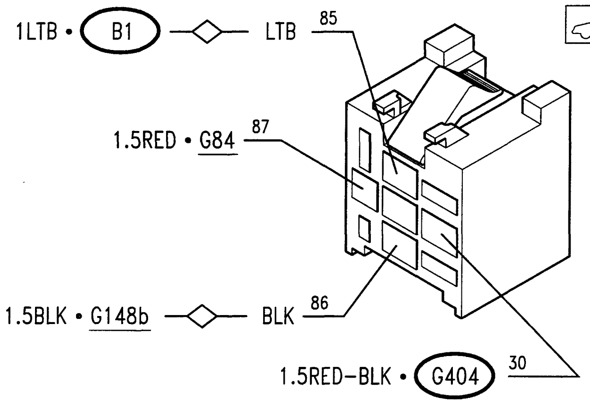

Automatic hood electric pump relay

I117

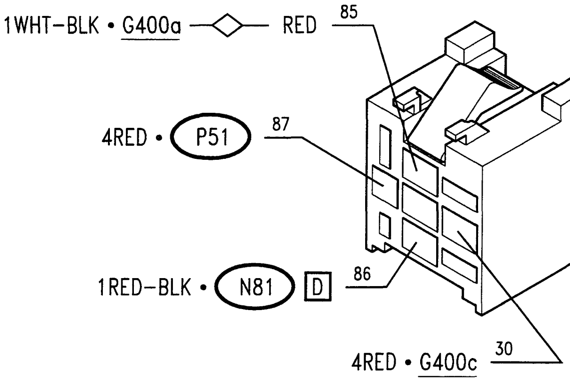

Minimum engine oil pressure

L2

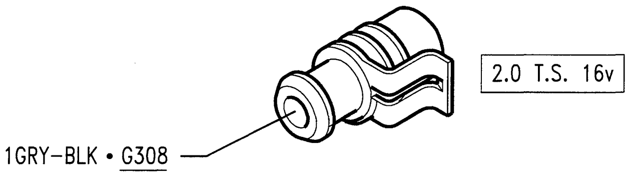

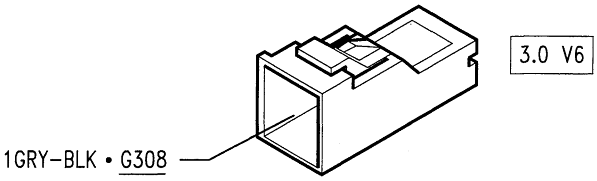

Sender for fuel level gauge

L9

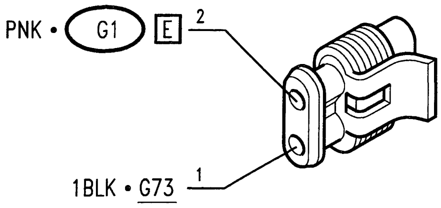

Sender for engine coolant temperature gauge and max. temperature warning light contact

L10

2.0 T.S. 16v

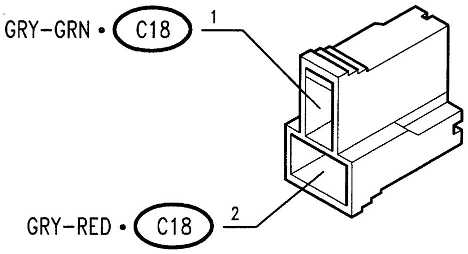

3.0 V6

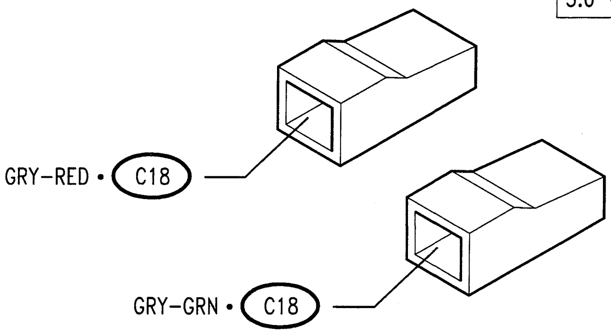

Speedometer sensor

L17

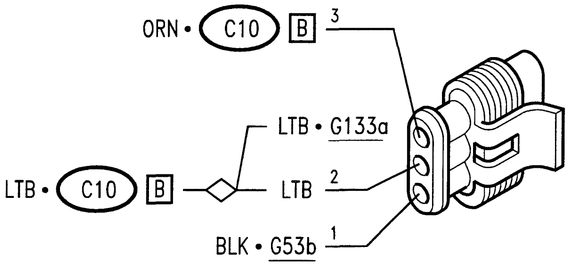

RH front phonic wheel inductive sensor

L28

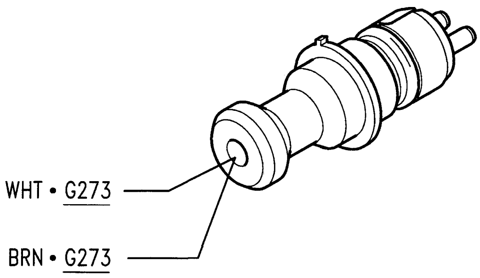

LH front phonic wheel inductive sensor

L29

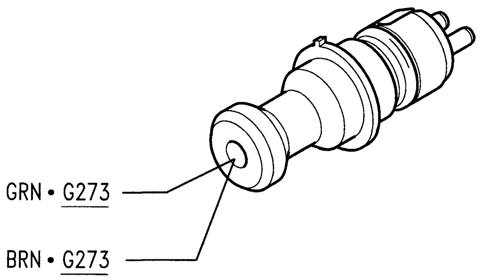

RH rear phonic wheel inductive sensor

L30

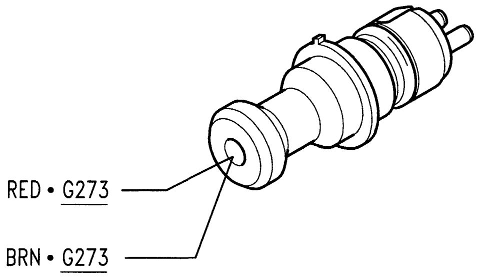

LH rear phonic wheel inductive sensor (L31)

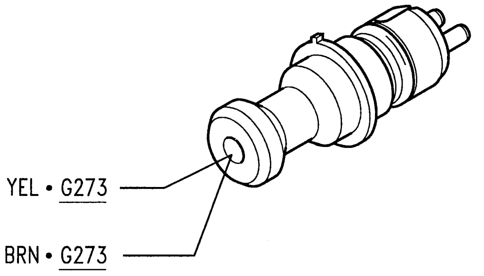

Two-level thermal contact (L33)

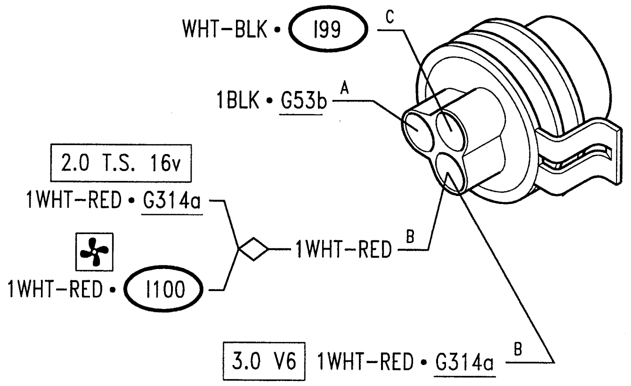

E.G.R. solenoid valve (L46)

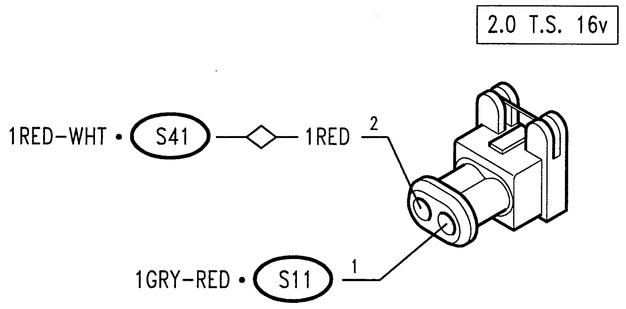

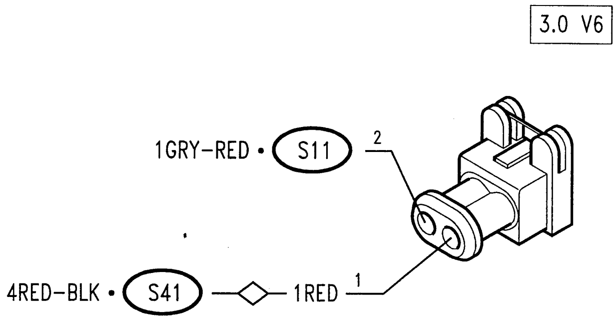

Luggage compartment opening actuator electromagnet (M12)

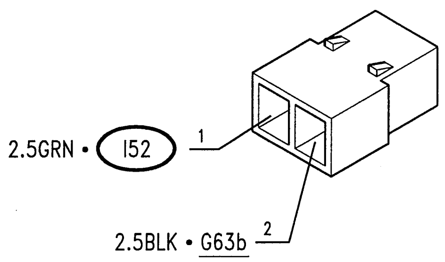

Fuel flap opening actuator electromagnet (M13)

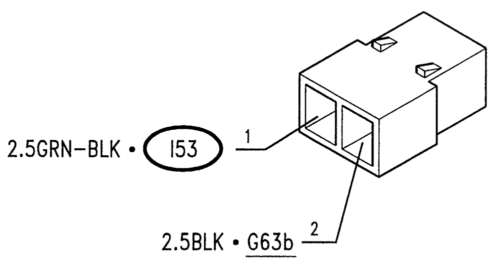

Evaporation solenoid valve (M15)

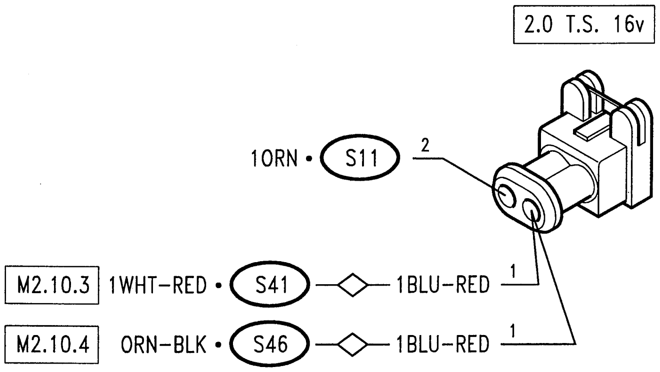

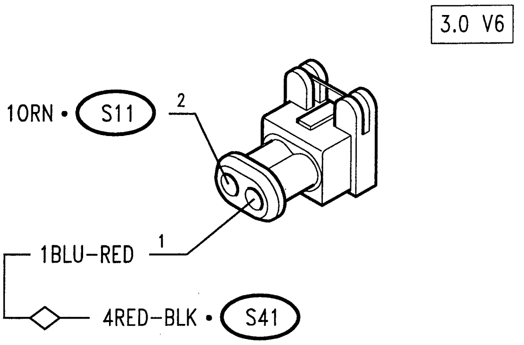

LH hood release actuator electromagnet **M26a**

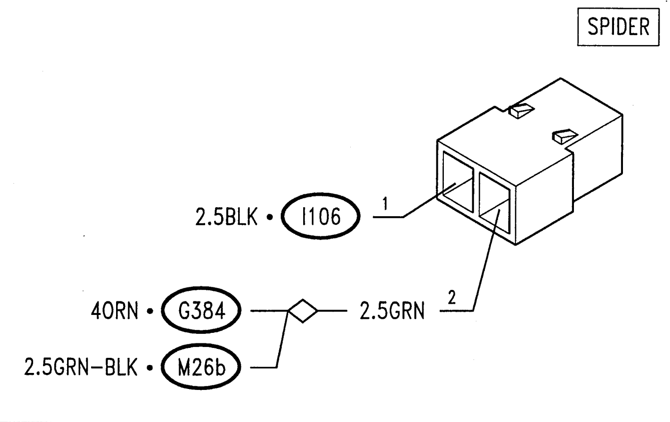

LH hood release actuator electromagnet **M26a**

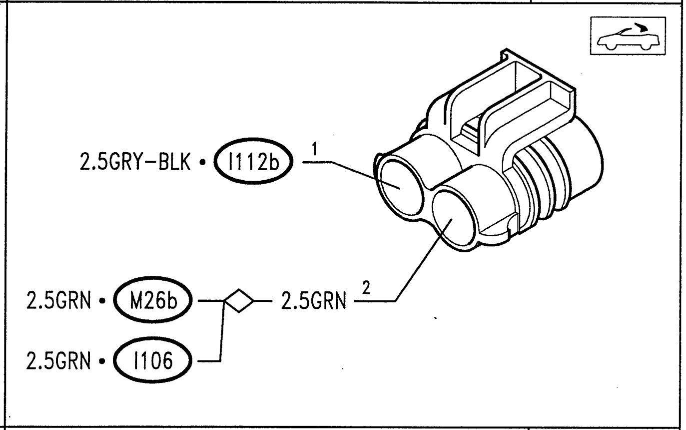

RH hood release actuator electromagnet **M26b**

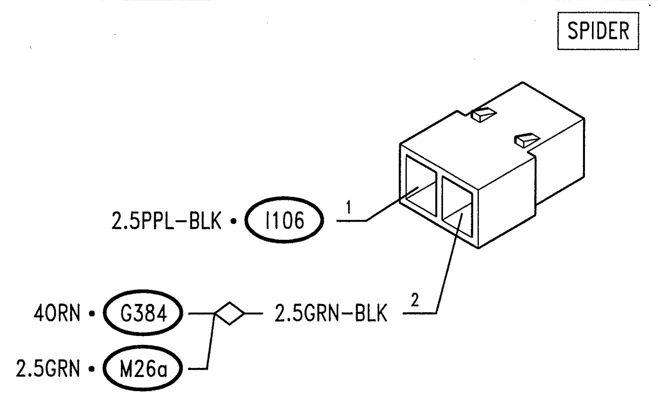

RH hood release actuator electromagnet **M26b**

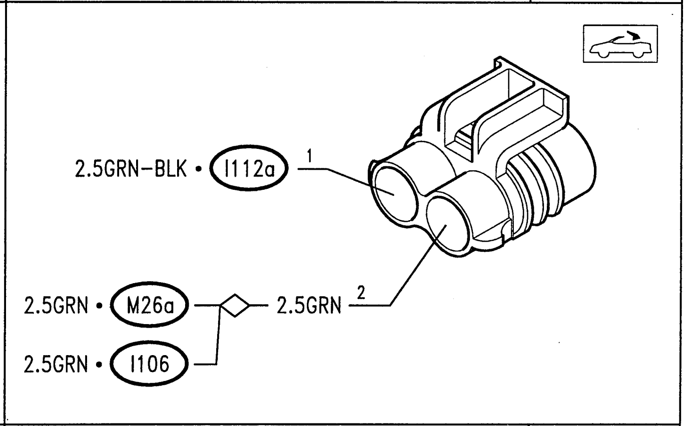

Hood cover release actuator electromagnet **M27a**

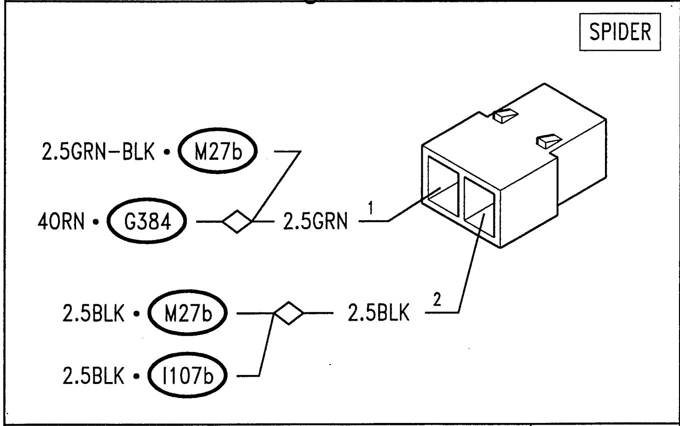

RH hood cover release actuator electromagnet **M27b**

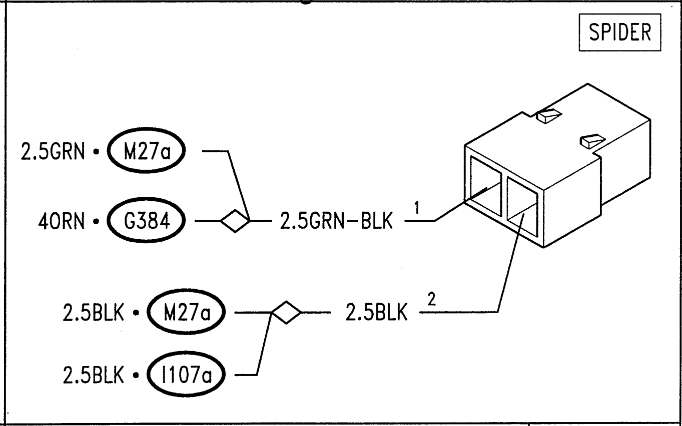

RH hood cover release actuator electromagnet **M27**

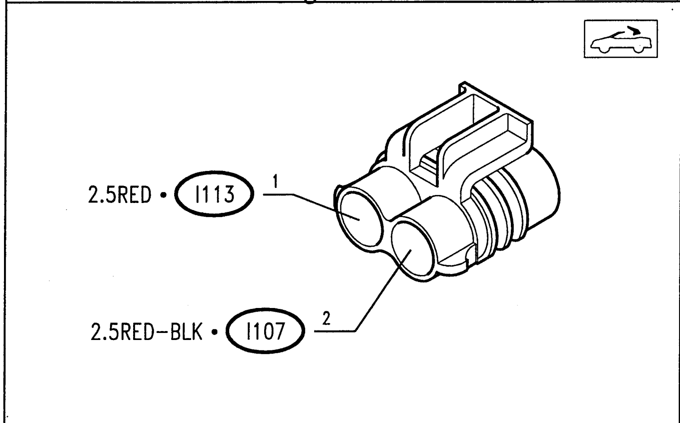

Automatic hood solenoid valve n.1 **M28a**

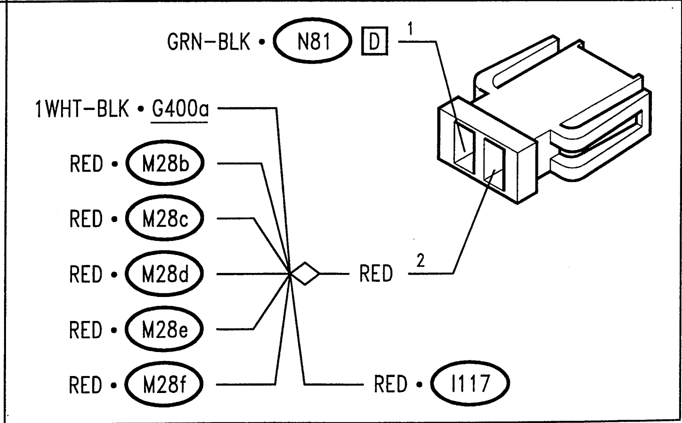

Automatic hood solenoid valve no.2 — M28b

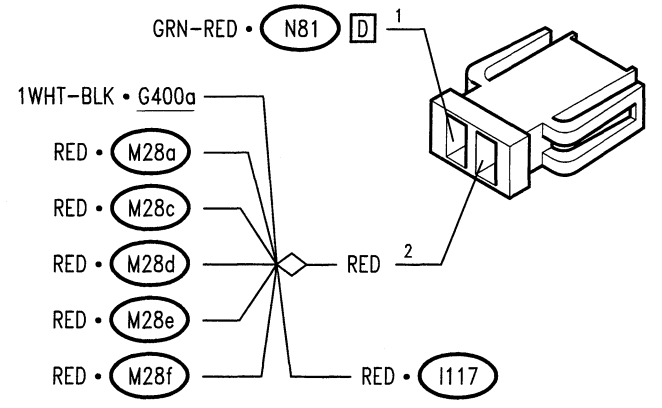

Automatic hood solenoid valve no.3 — M28c

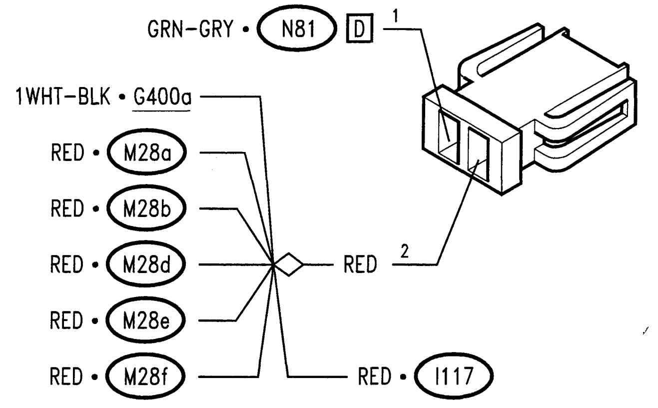

Automatic hood solenoid valve no.4 — M28d

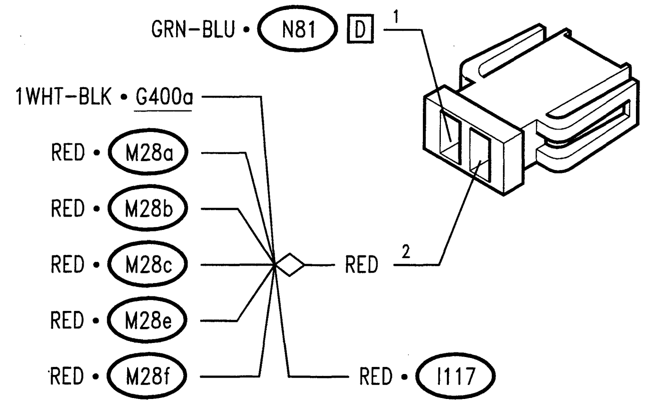

Automatic hood solenoid valve no.5 — M28e

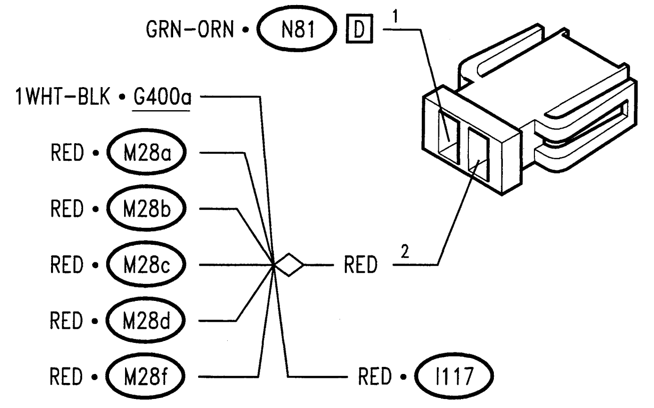

Automatic hood solenoid valve no.6 — M28f

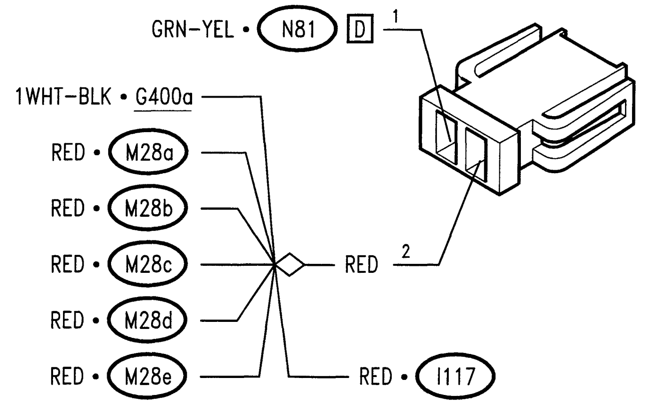

Hazard warning lights and direction indicators intermittence — N13

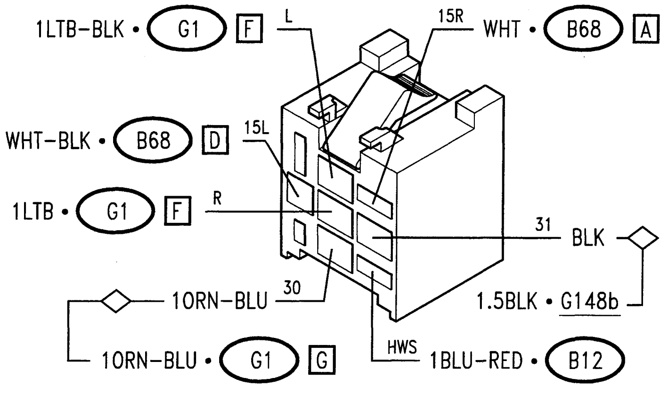

Electronic windscreen wiper intermittence — N14

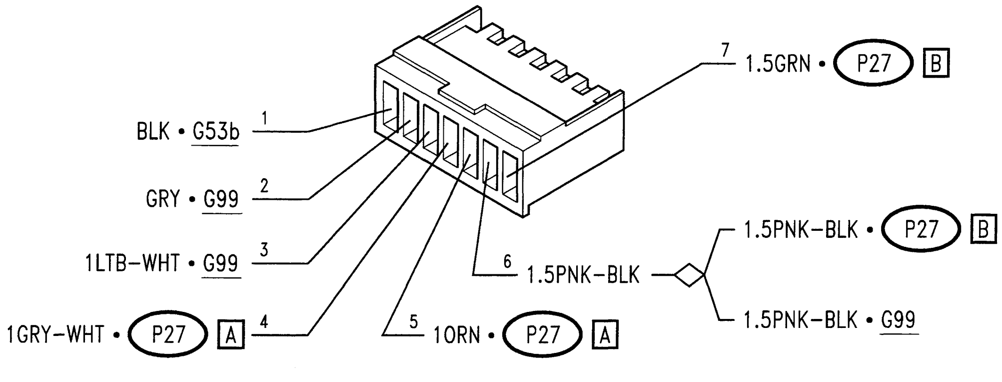

Rear fog guard electronic device N25

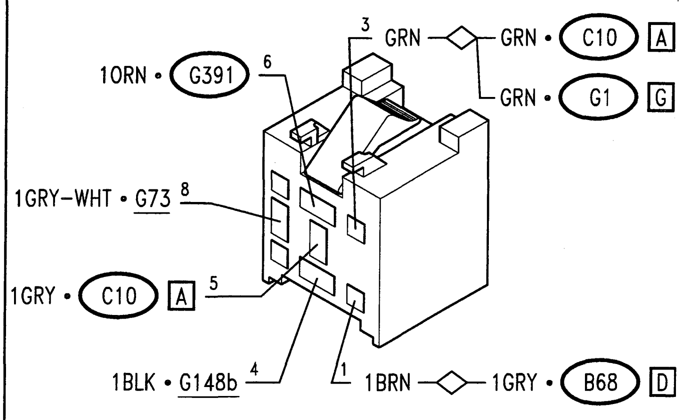

Power window control unit N38 A

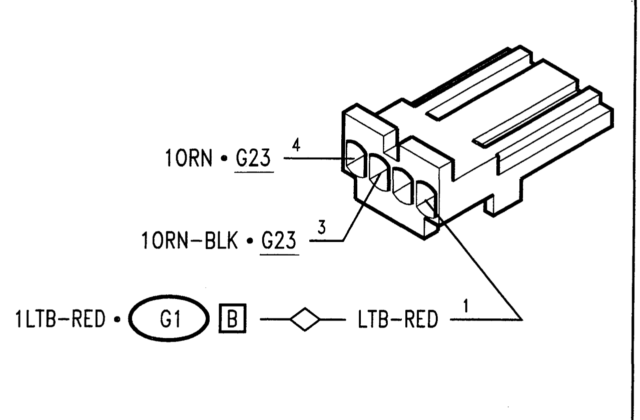

Power window control unit N38 B

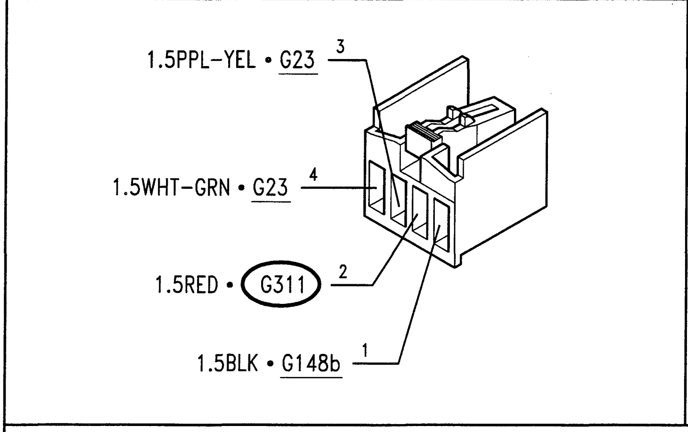

Anti-theft device control unit N45 A

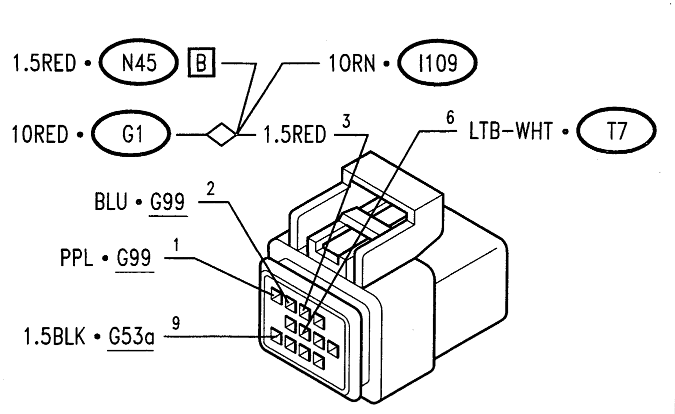

Anti-theft device control unit N45 B

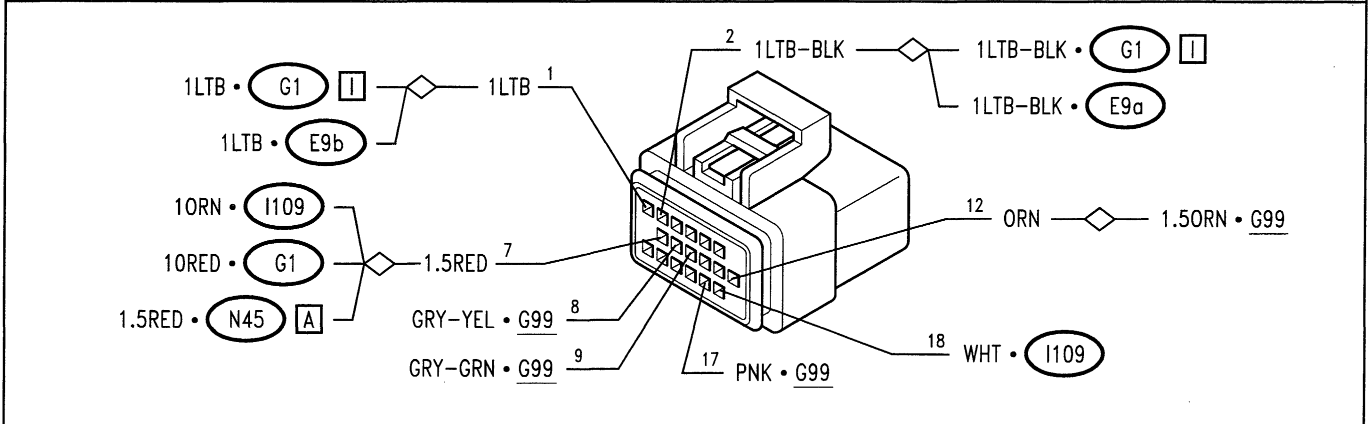

Remote control signal receiver N67

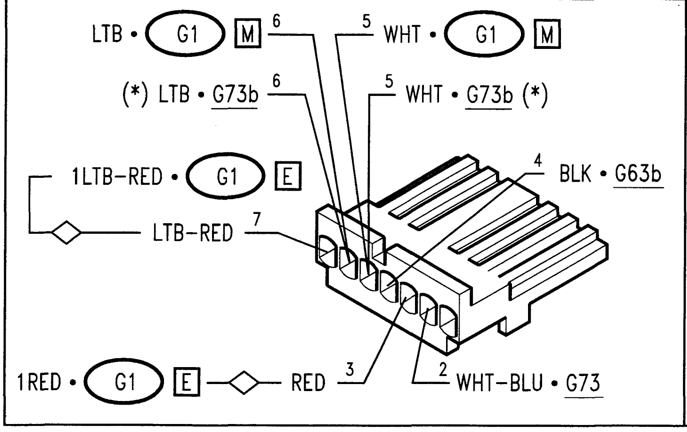

ALFA ROMEO CODE control unit N77 A

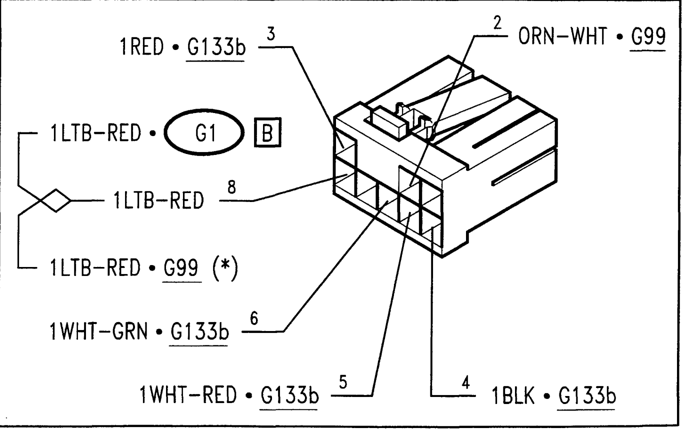

(*) from chassis no.___

ALFA ROMEO CODE control unit

N77 B

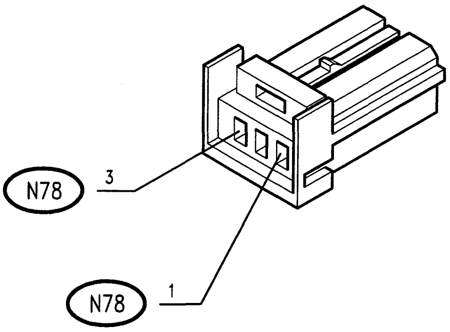

Hood cover release timer

N80

SPIDER

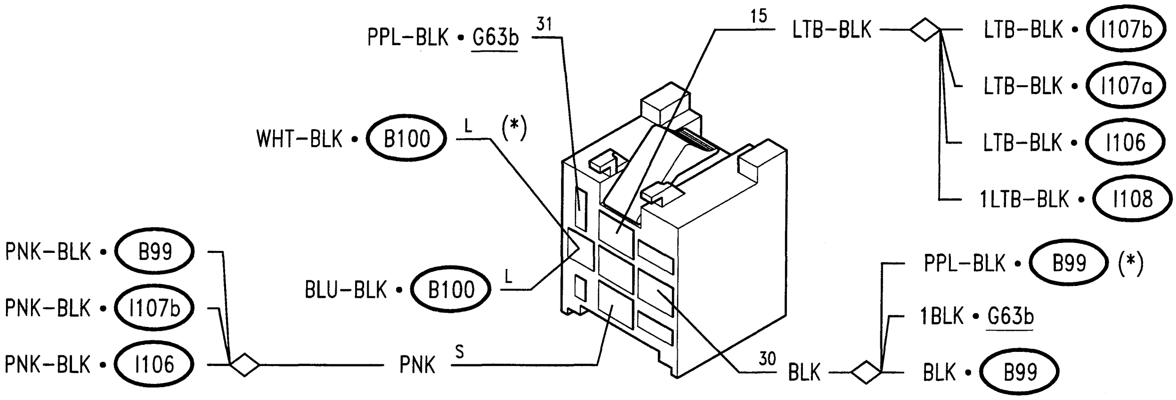

Automatic hood control unit

N81 A

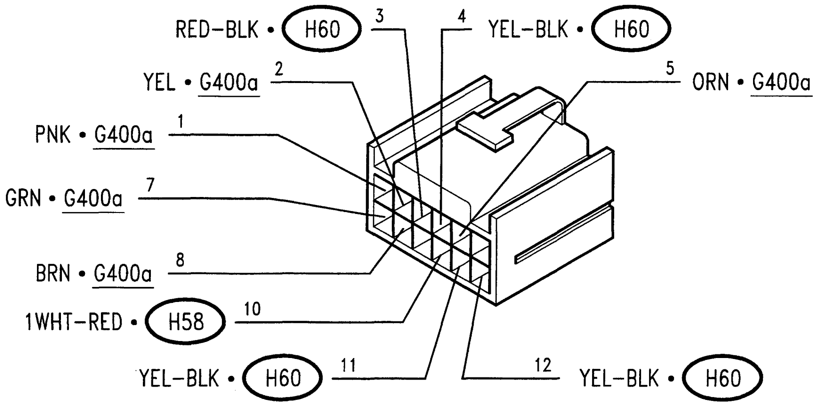

Automatic hood control unit

N81 B

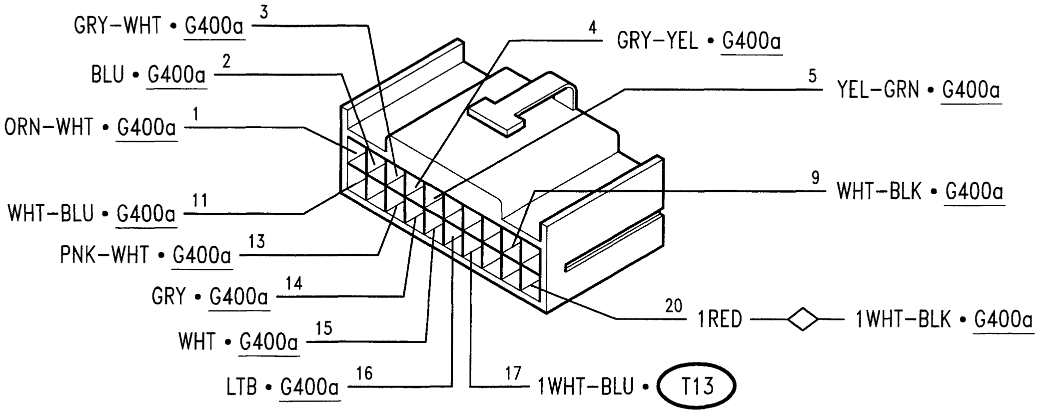

(*) from chassis no.___

Automatic hood control unit

N81 D

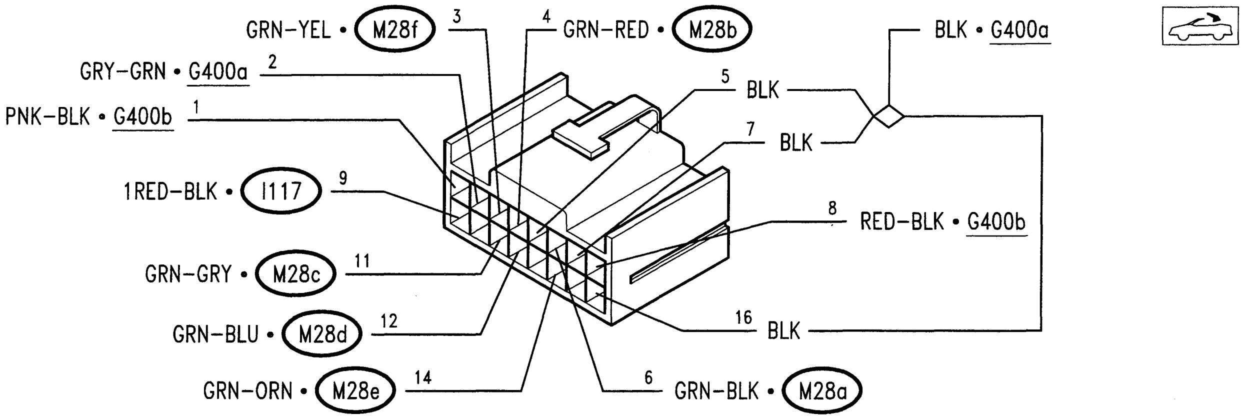

Heated rearscreen

O1

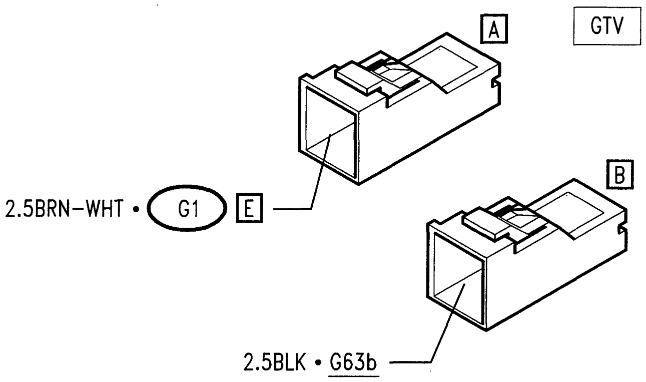

High tone horn

O2a

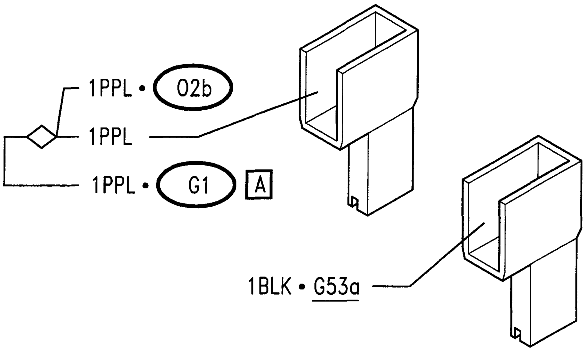

Low tone horn

O2b

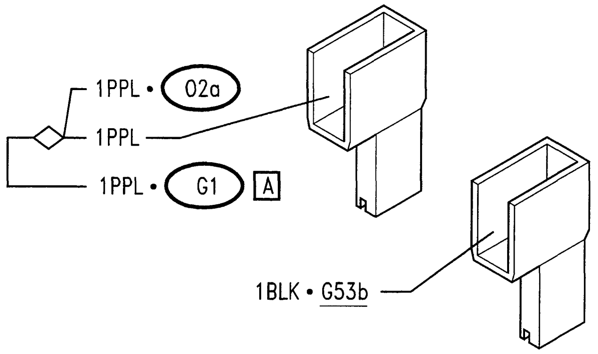

Car radio

O4 A

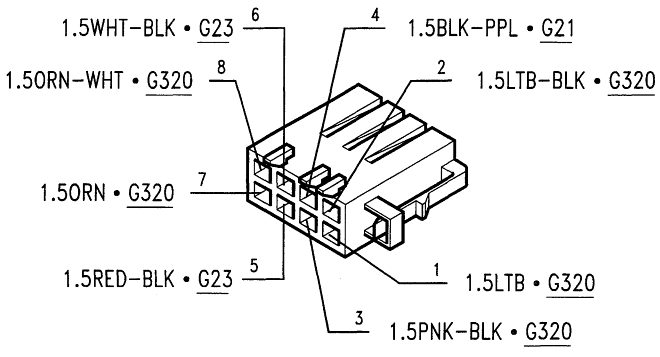

Car radio

O4 B

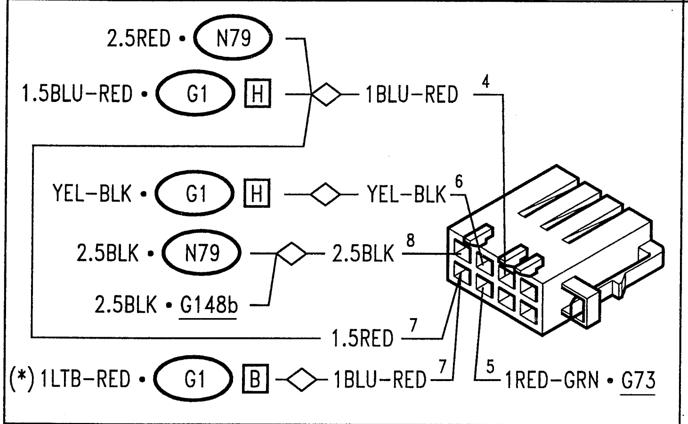

RH front loud-speaker

O5a

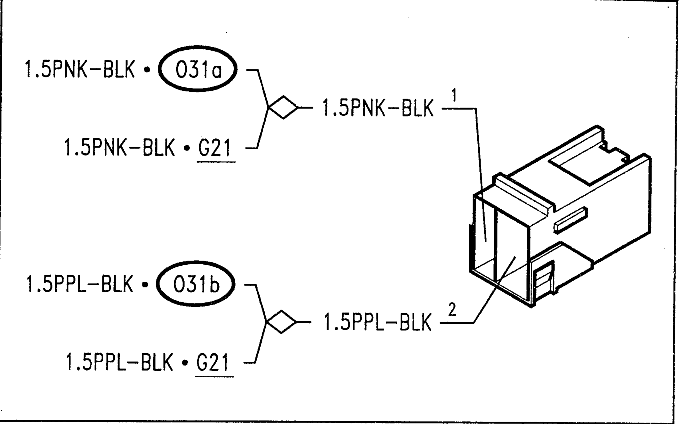

LH front loud-speaker

O5b

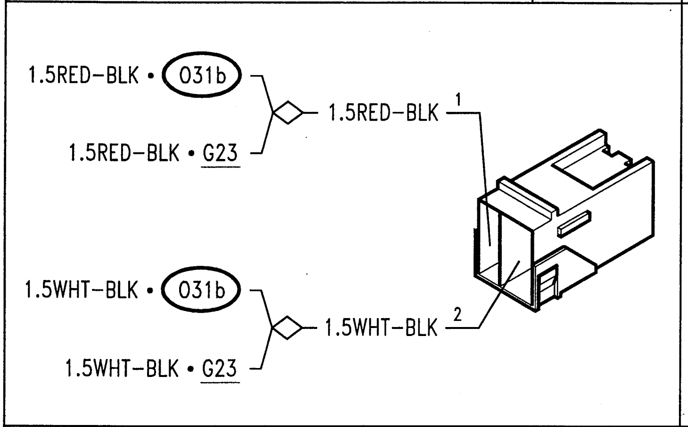

RH rear loud-speaker

O5c

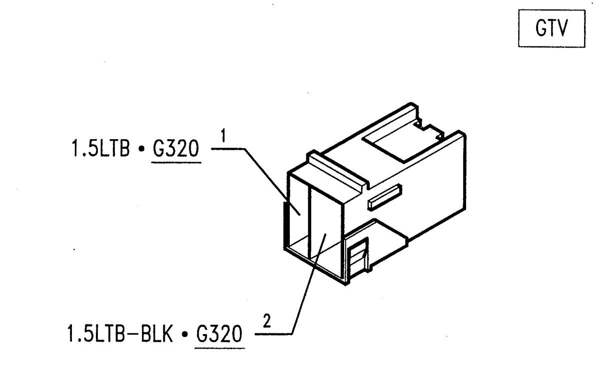

LH rear loud-speaker

O5d

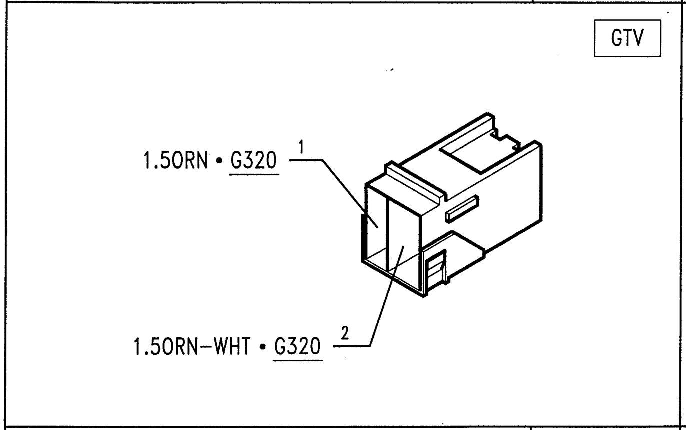

Cigar lighter - current socket

O6

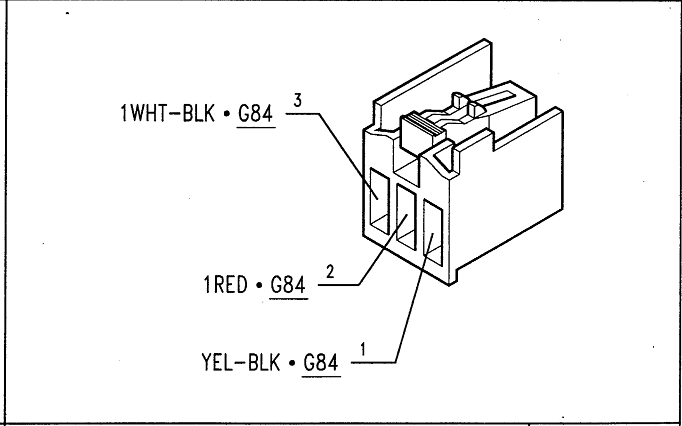

RH wing mirror defroster

O18

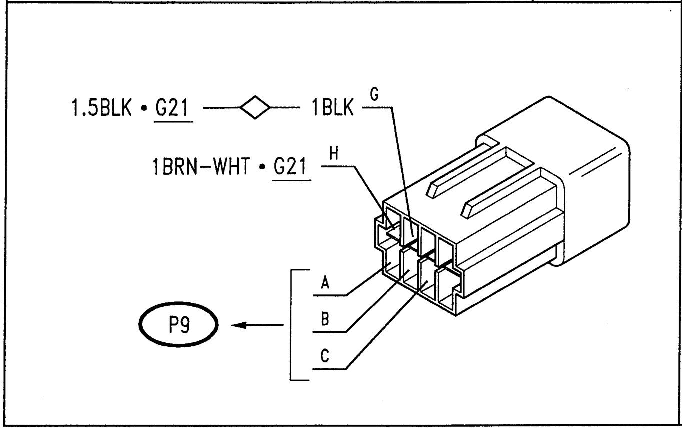

LH wing mirror defroster

O19

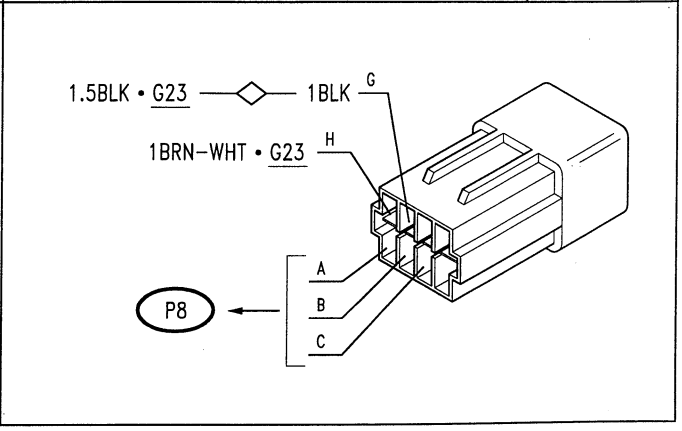

(*) up to chassis n°___

Additional engine fan resistance

O22

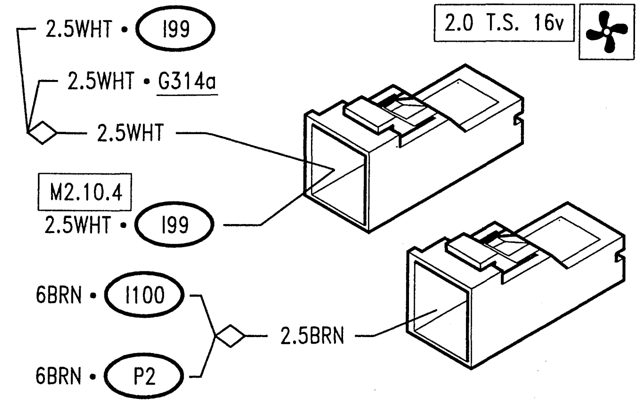

Additional engine fan resistance

O22

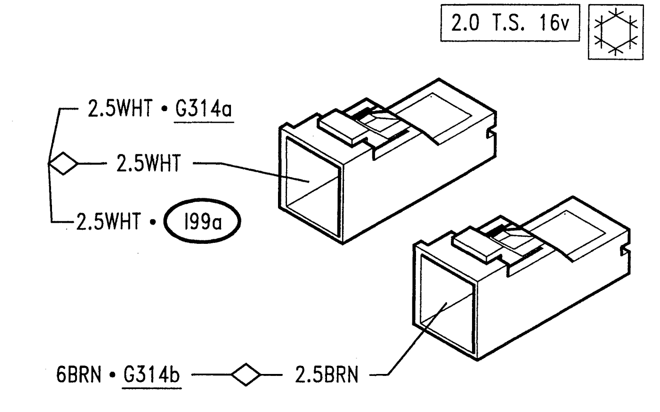

Additional engine fan resistance

O22a

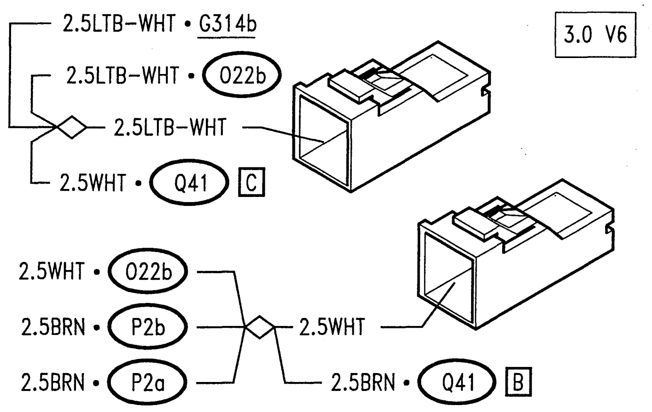

Additional engine fan resistance

O22a

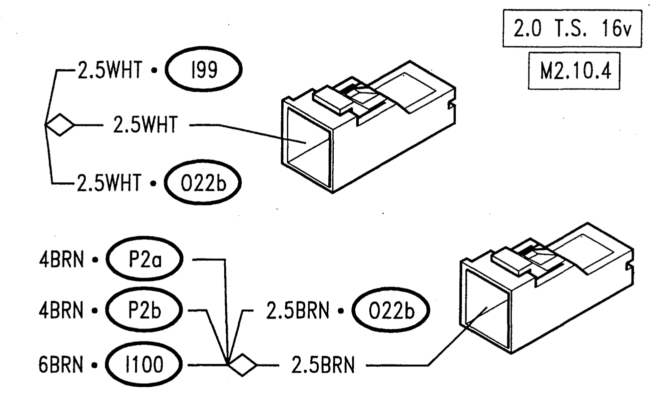

Additional engine fan resistance

O22b

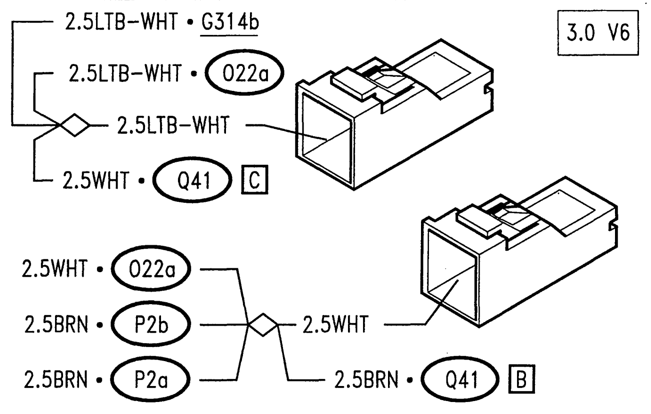

Additional engine fan resistance

O22b

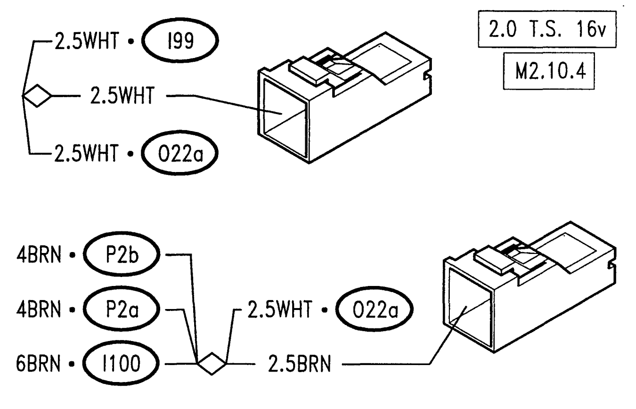

RH Tweeter loud-speaker

O31a

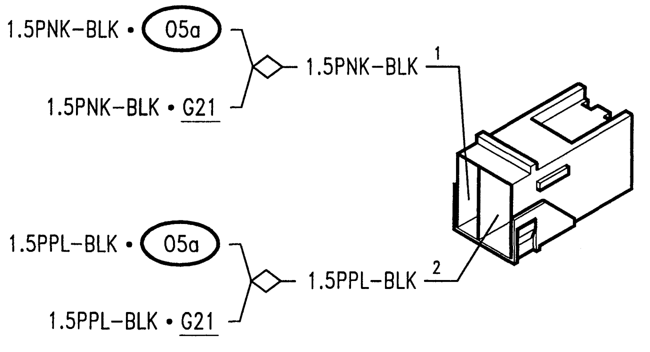

LH Tweeter loud-speaker

O31b

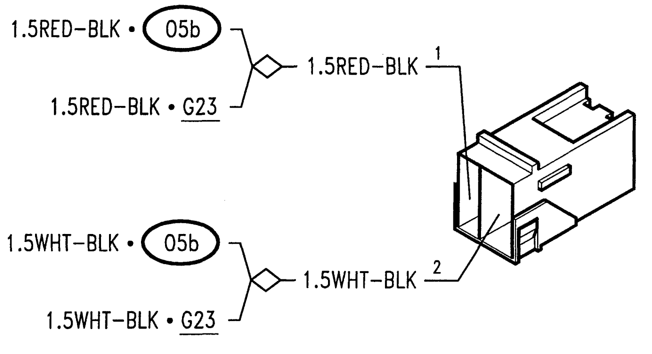

(*) from chassis n°___

Rear subwoofer speaker

O37 A

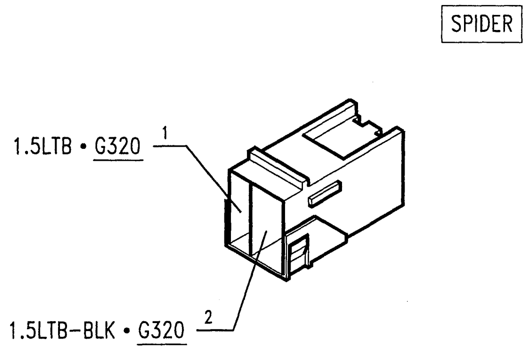

Rear subwoofer speaker

O37 B

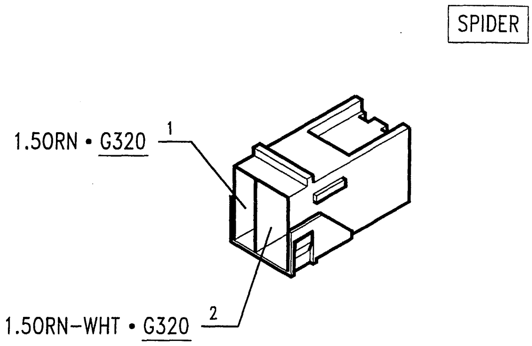

Engine cooling fan

P2

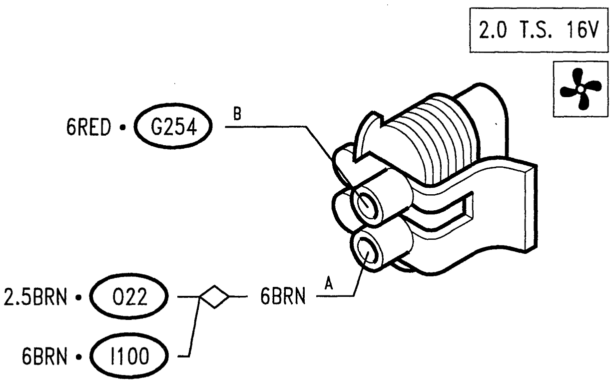

Engine cooling fan

P2

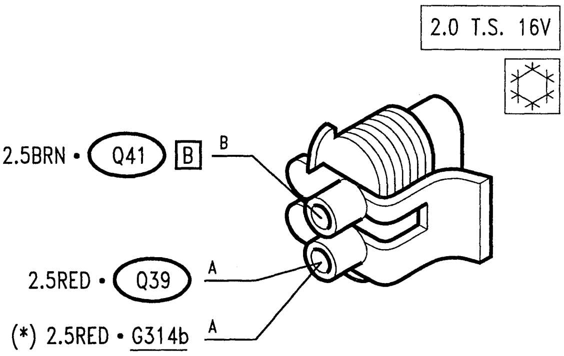

Engine cooling fan

P2a

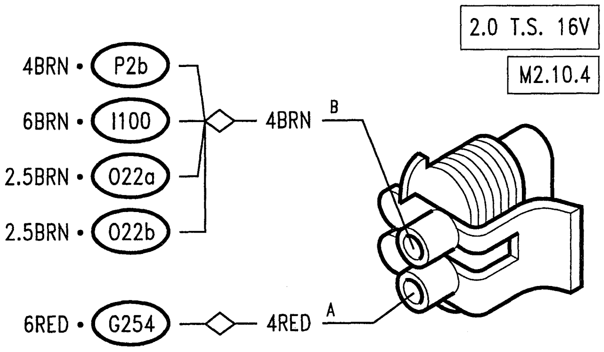

Engine cooling fan

P2b

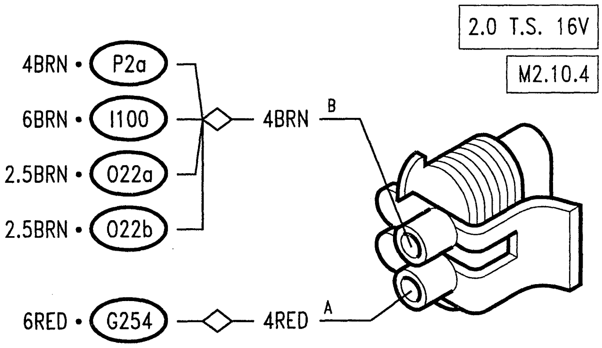

Engine cooling fan P2a

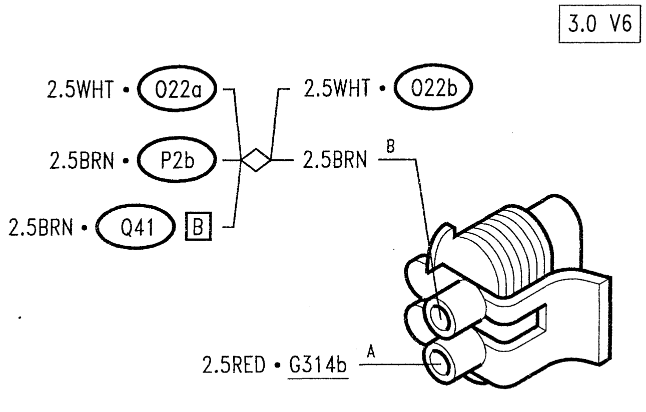

Engine cooling fan P2b

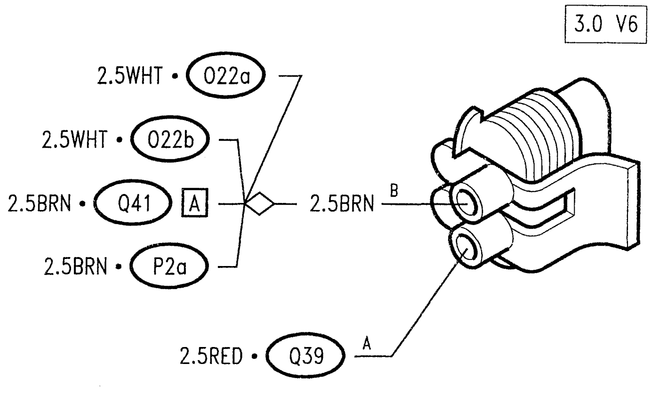

LH wing mirror motor P8

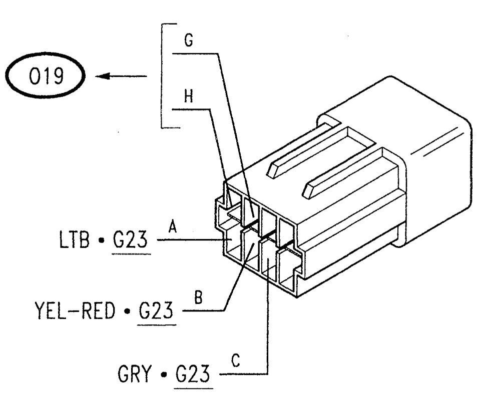

RH wing mirror motor P9

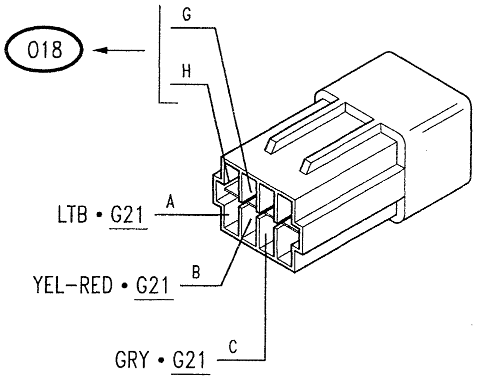

Front RH door lock motor P10 A

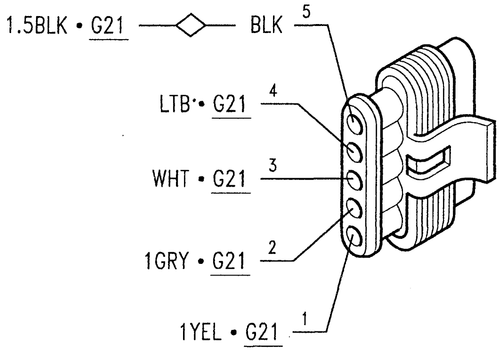

Front RH door lock motor P10 B

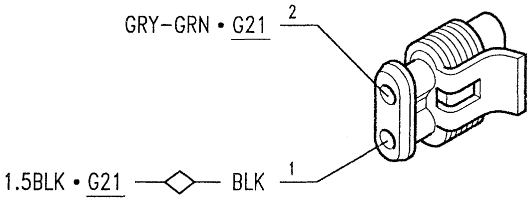

Front LH door lock motor P11 A

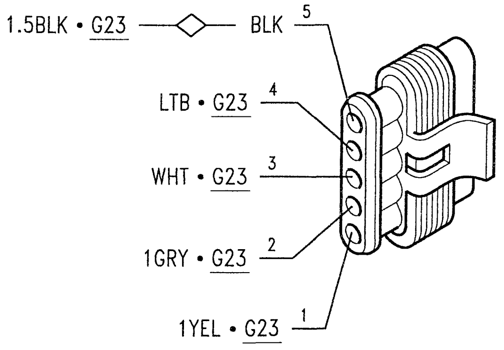

Front LH door lock motor P11 B

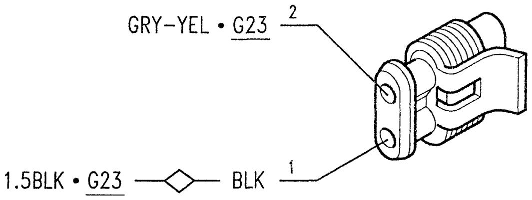

Front RH power window motor P14

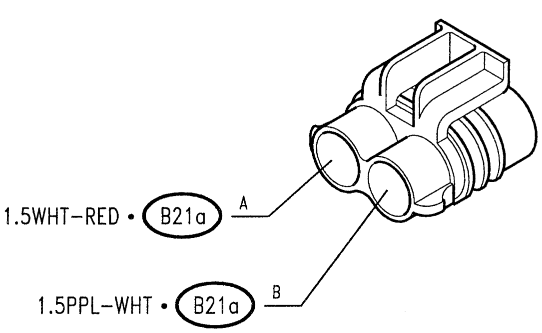

Front LH power window motor P15

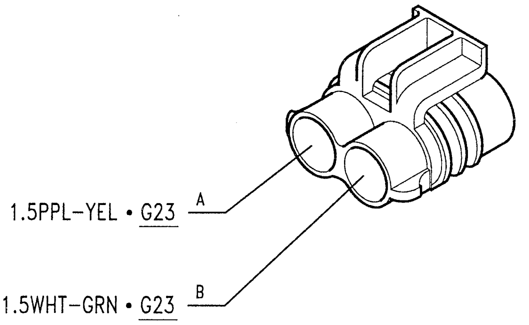

Electric fuel pump P18

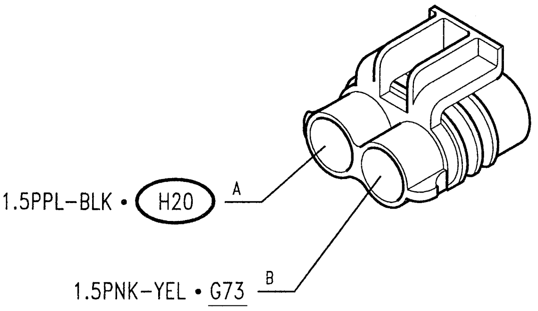

Windscreen and rearscreen washer pump P19

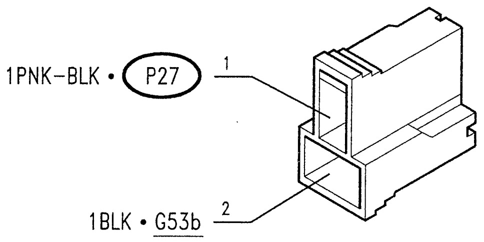

Windscreen wiper motor with control unit P27 A

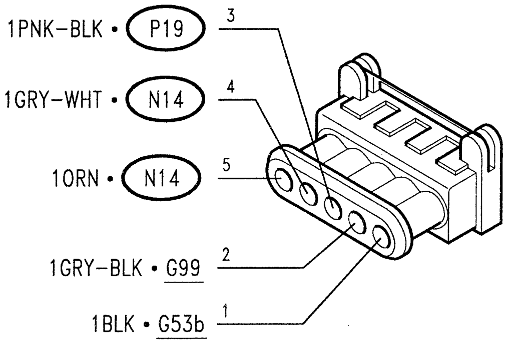

Windscreen wiper motor with control unit P27 B

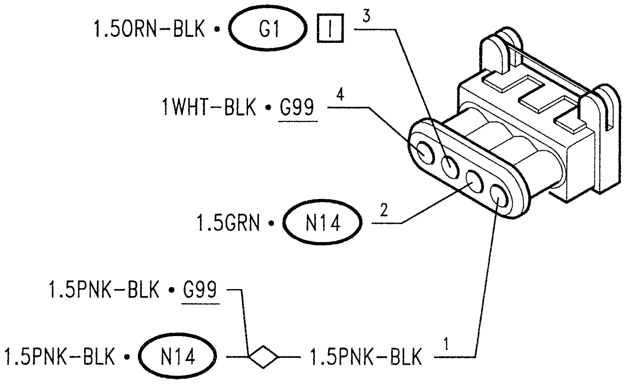

.RH headlamp aiming motor P35a

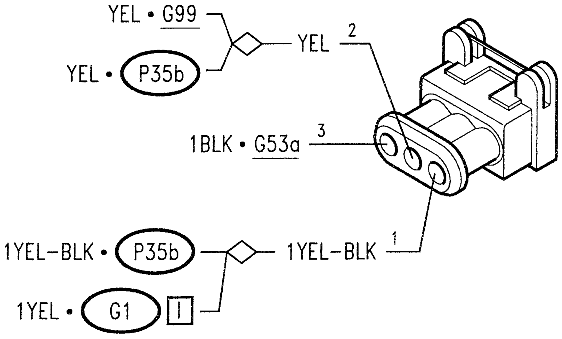

LH headlamp aiming motor P35b

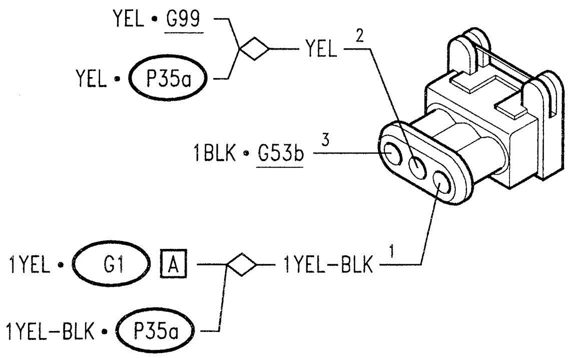

Automatic hood control pump

P51

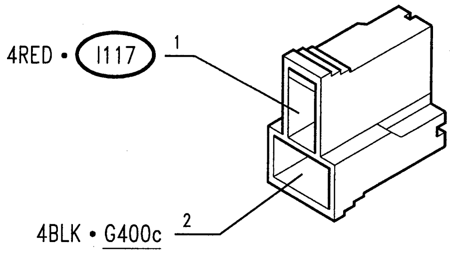

Heater fan

Q1

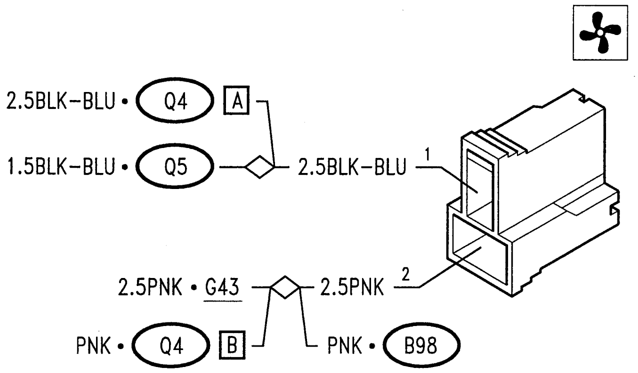

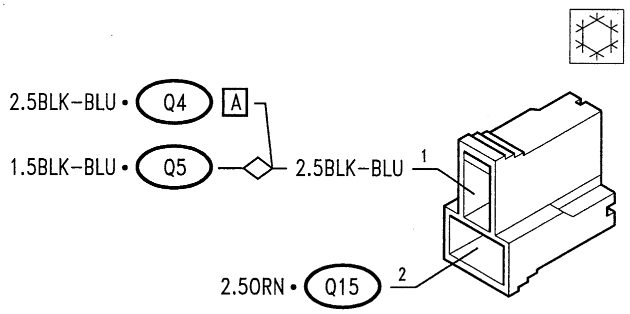

Heater fan control

Q4 A

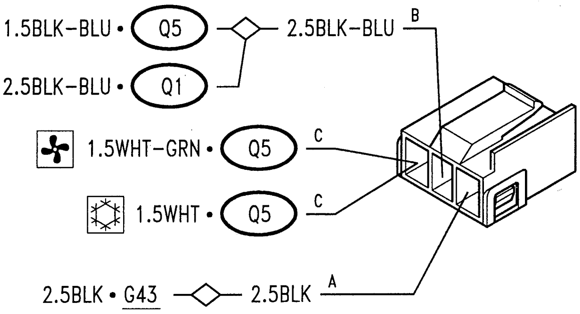

Heater fan control

Q4 B

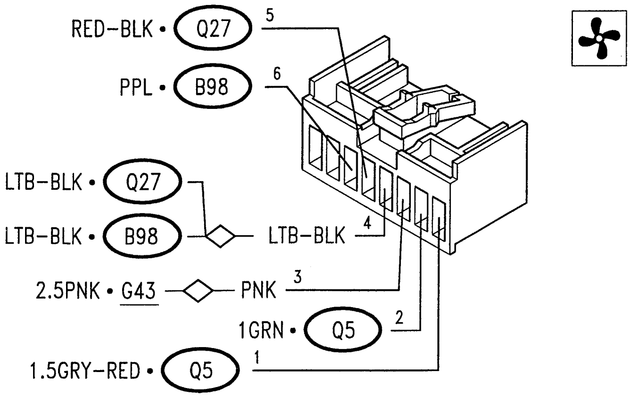

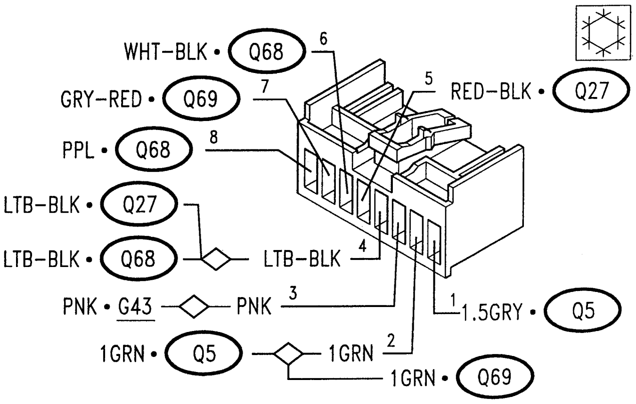

Heater fan speed adjustment resistance Q5

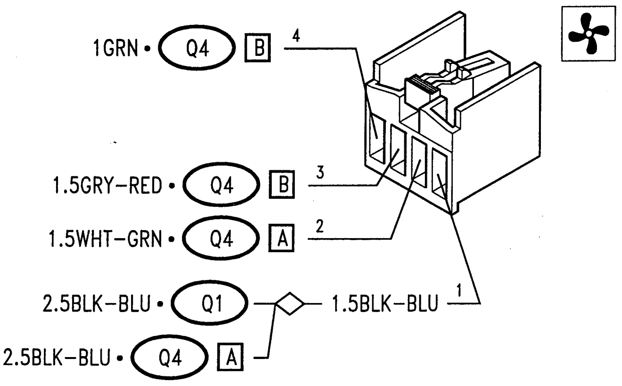

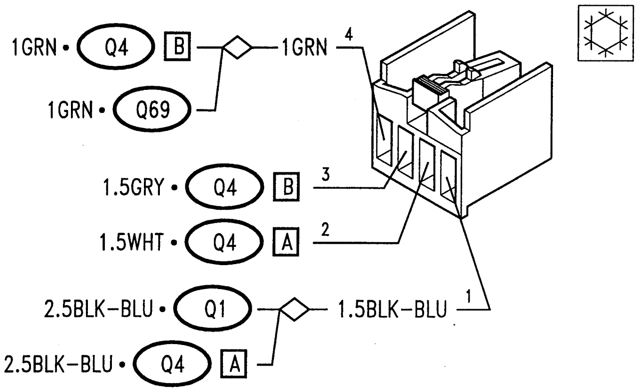

Minimum pressure switch Q9

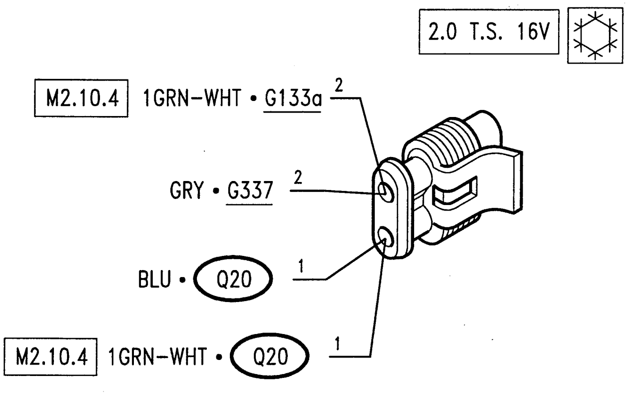

Compressor electromagnetic coupling Q11

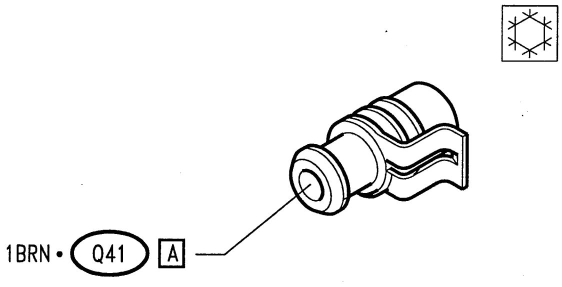

Heating and ventilation fan relay Q15

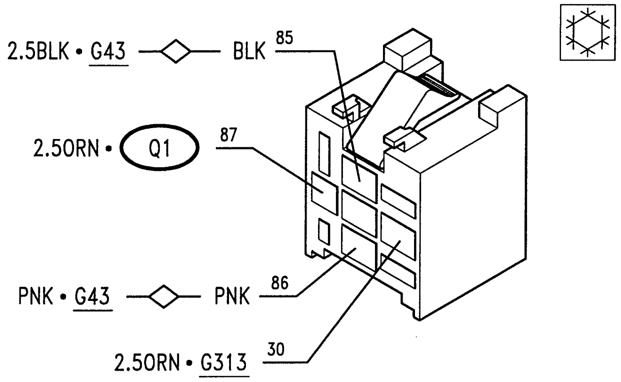

Min. and max. sensor pressure contact (Trinary) Q20

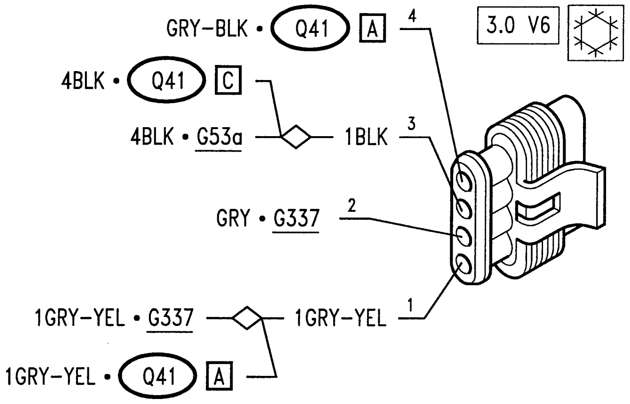

Min. and max. sensor pressure contact (Trinary) Q20

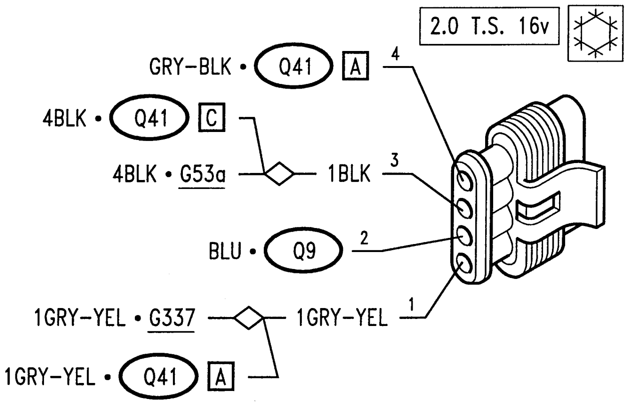

Min. and max. sensor pressure contact Q20

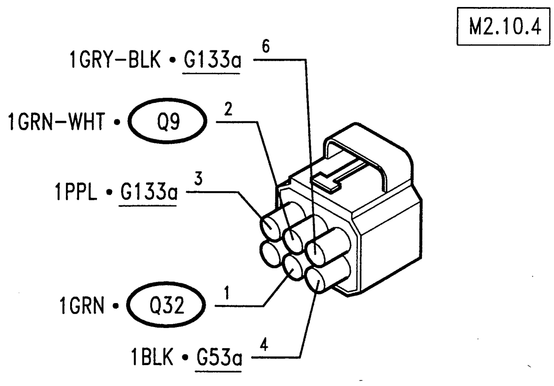

(**) up to chassis n°___

Electromagnetic coupling relay (Q22)

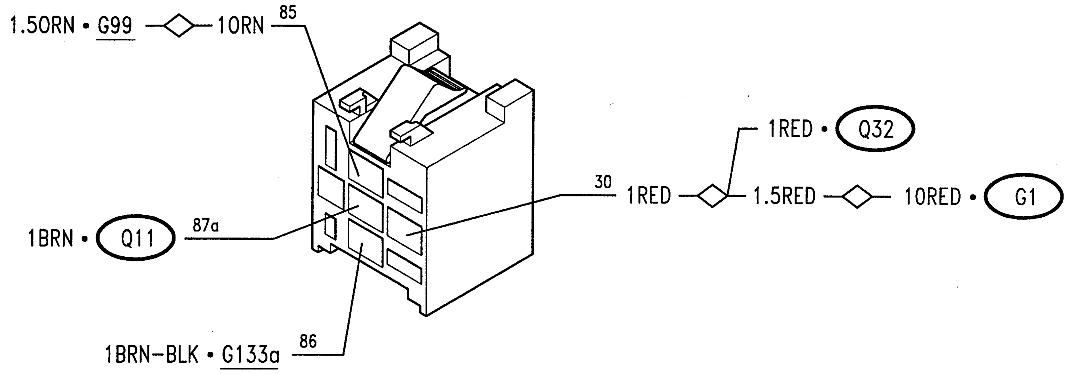

Auxiliary relay for heating and ventilation (Q32)

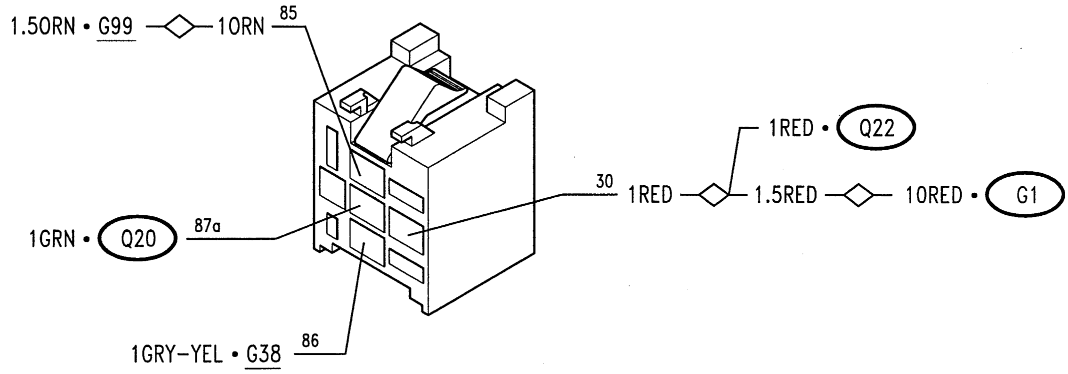

Air recirculation flap control motor (Q27)

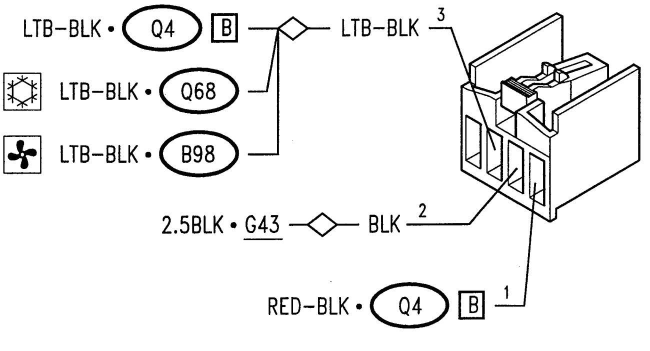

Fuse for conditioning system (30A) (Q39)

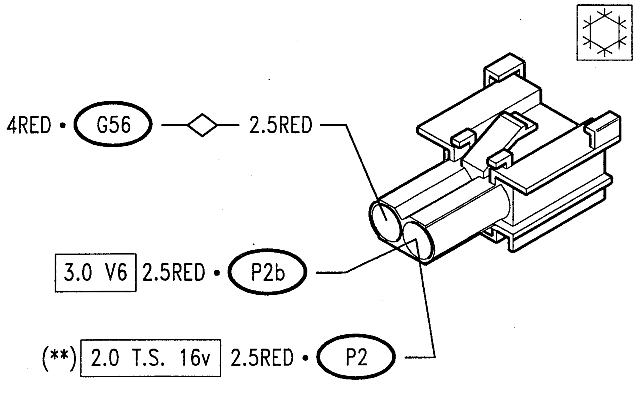

Fuse for conditioning system (30A) (*) Q39

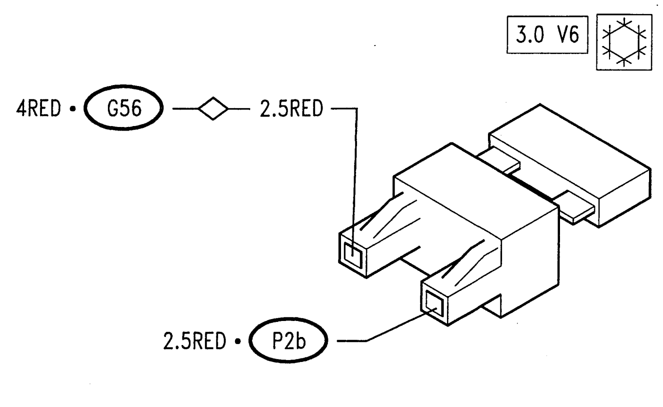

Fuse for conditioning system (15A) (*) Q40

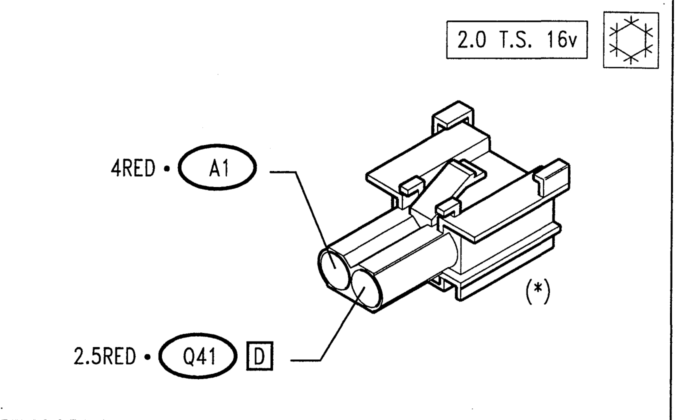

Set of relay and fuses for air conditioner Q41 A

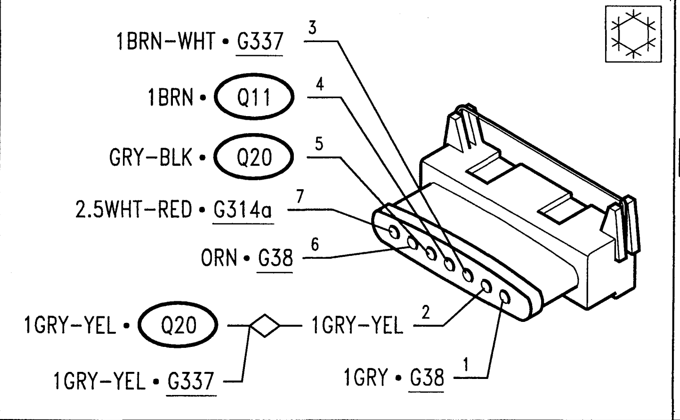

Set of relay and fuses for air conditioner Q41 B

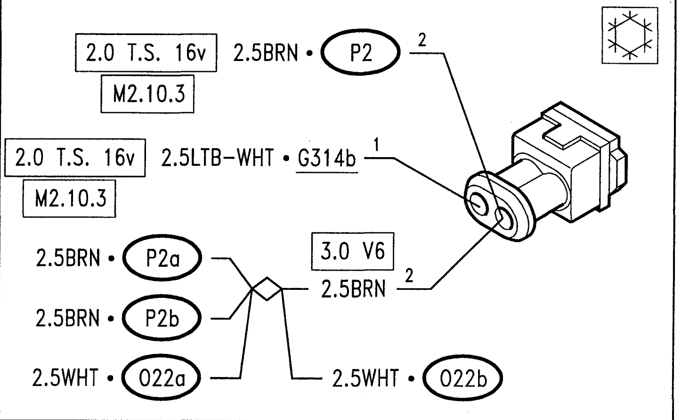

Set of relay and fuses for air conditioner Q41 C

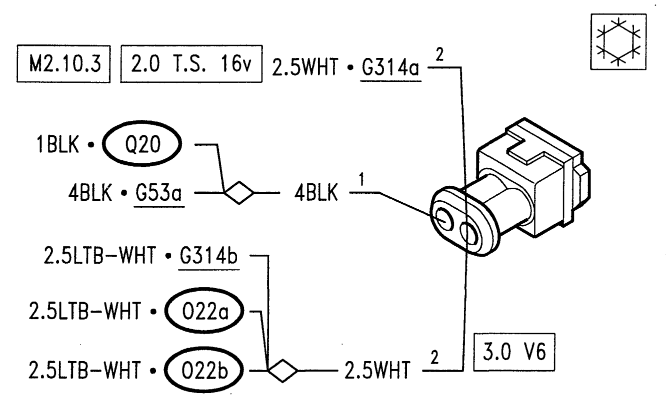

Set of relay and fuses for air conditioner Q41 D

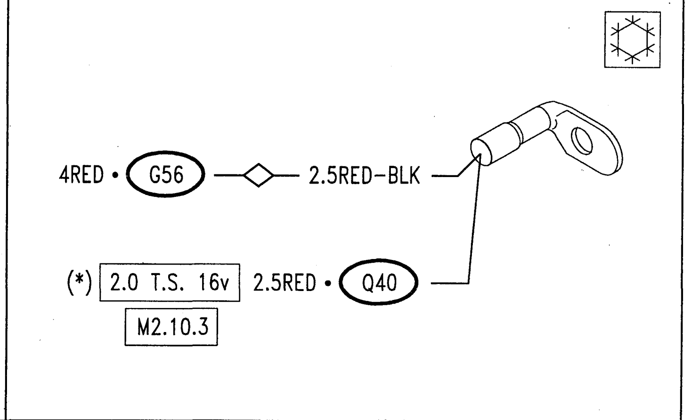

Compressor and air recirculation engagement switches Q68

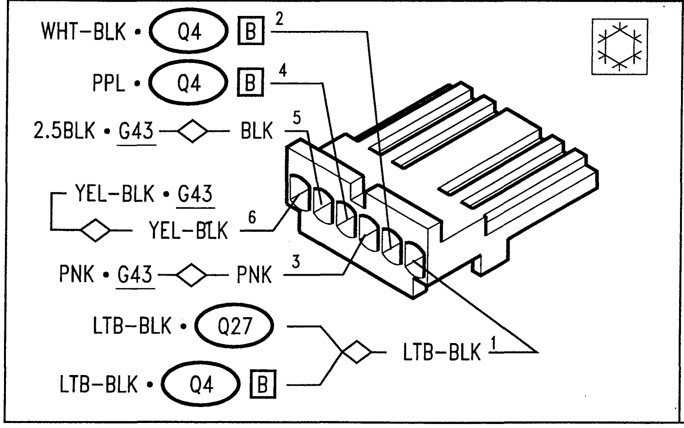

Heater fan 1st speed relay Q69

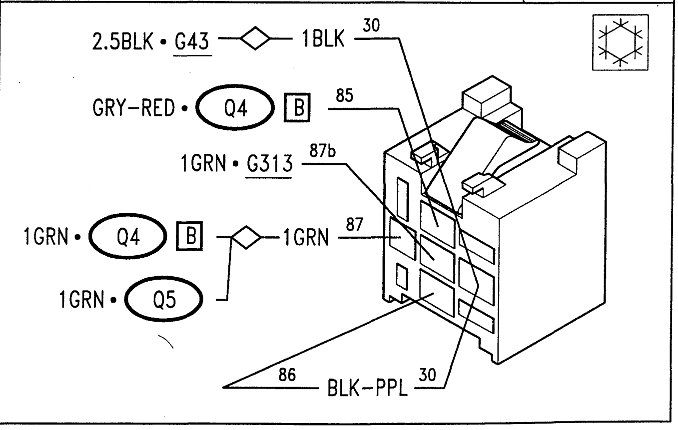

(*) from chassis n°___

Airbag control unit R22

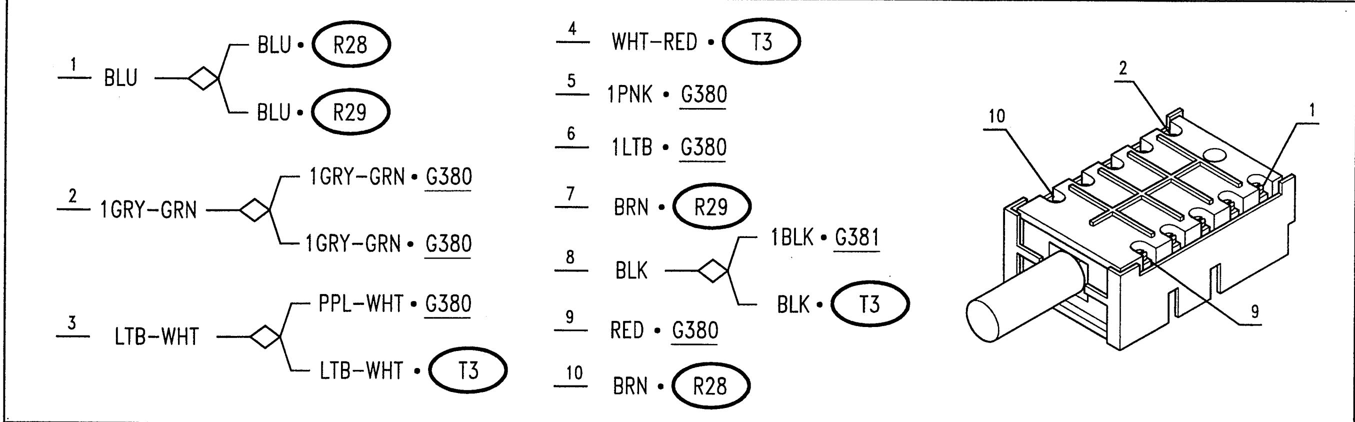

Airbag control unit (*) R22

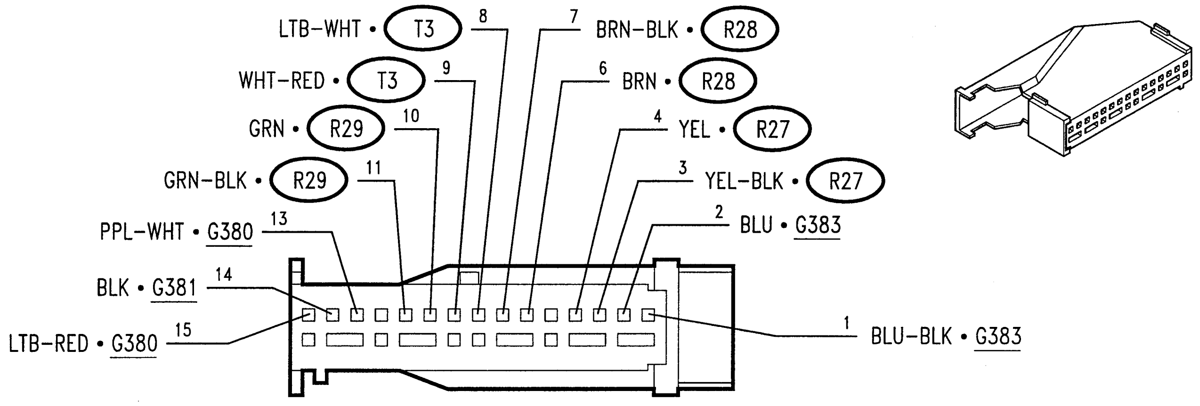

Capsule on steering wheel for airbag R23

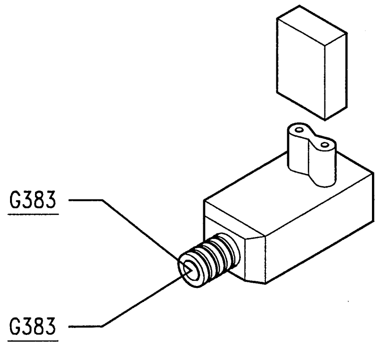

Passenger's side airbag capsule R27

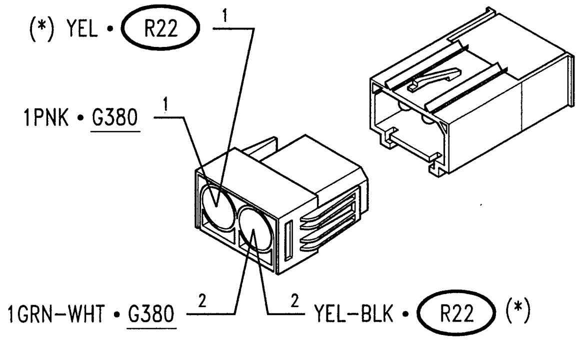

Capsule on RH pretensioner R28

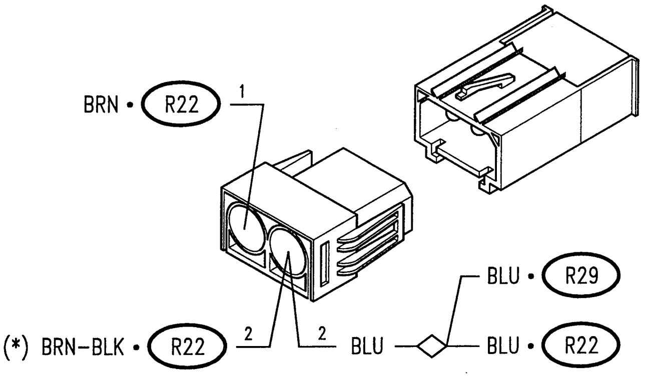

Capsule on LH pretensioner R29

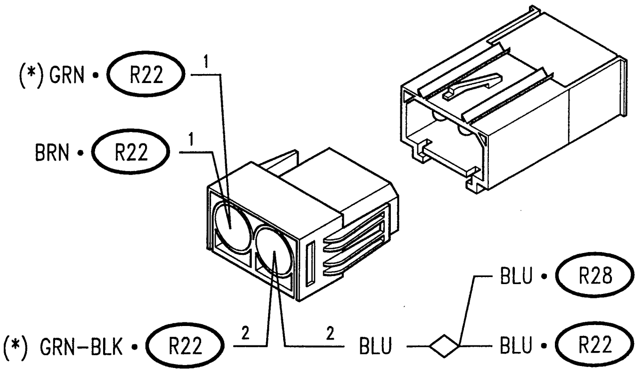

(*) from chassis n°6016879

Elettroinjectors S3

2.0 T.S. 16v
M2.10.3

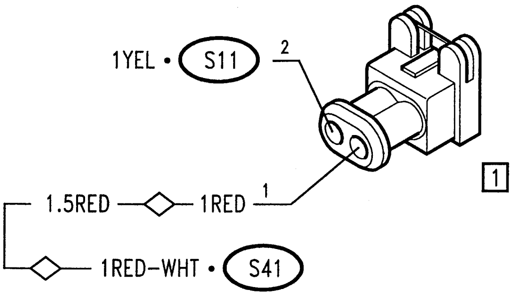

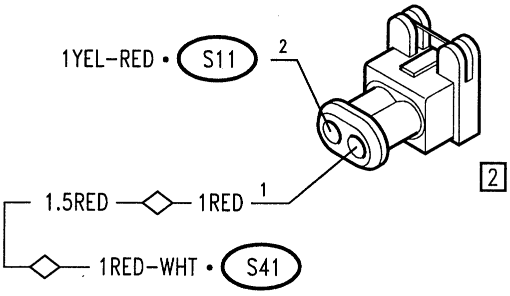

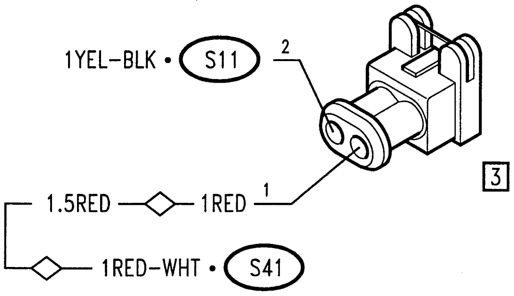

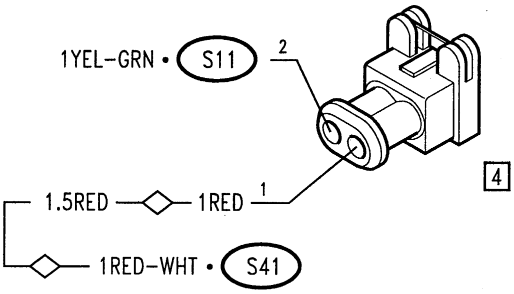

Elettroinjectors S3

2.0 T.S. 16v
M2.10.4

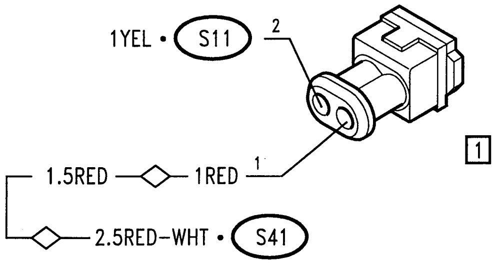

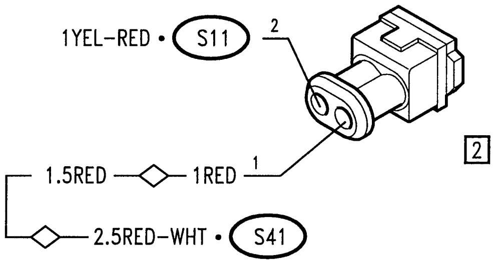

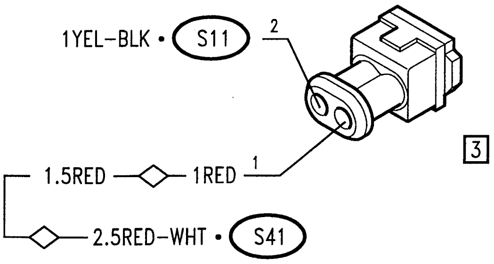

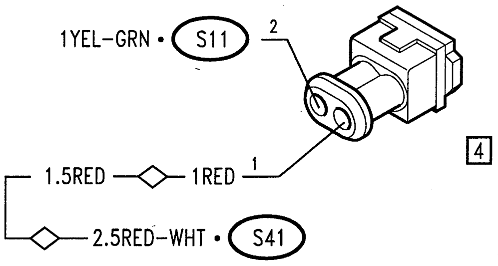

Elettroinjectors

S3

3.0 V6

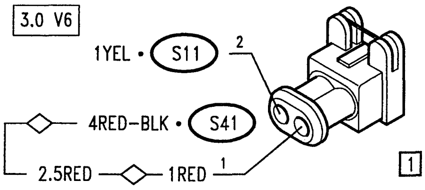

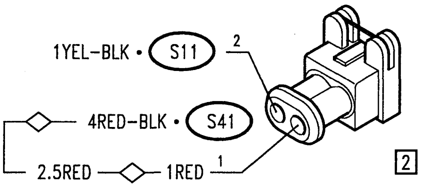

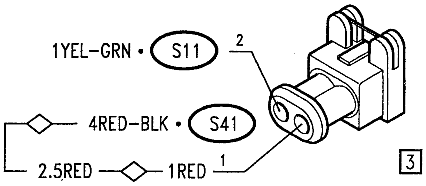

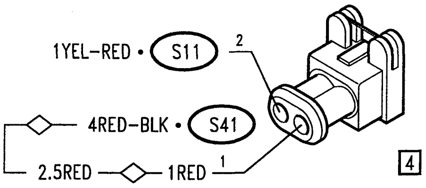

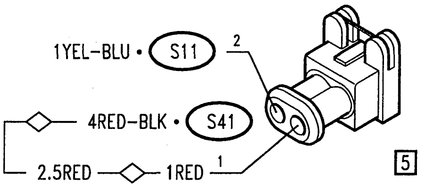

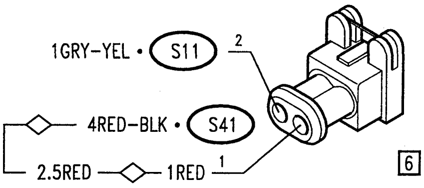

Air flow meter

S5

2.0 T.S. 16v

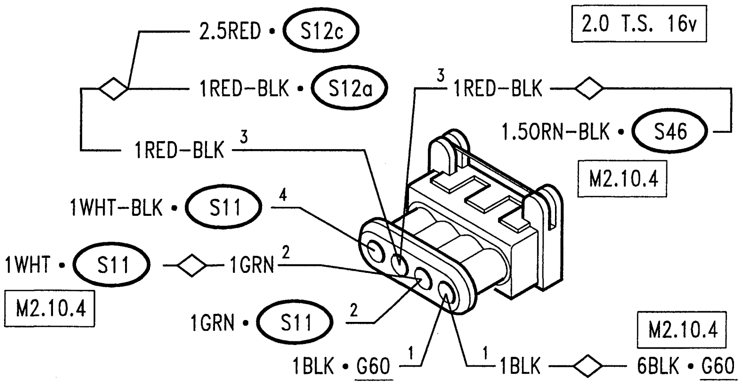

3.0 V6

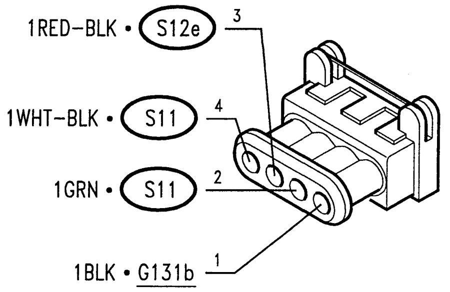

Engine temperature sensor

S7

2.0 T.S. 16v

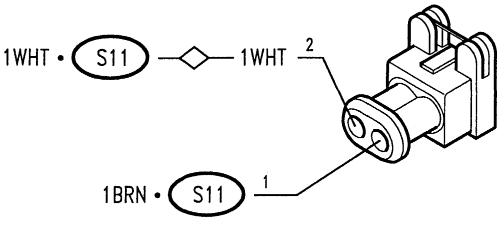

3.0 V6

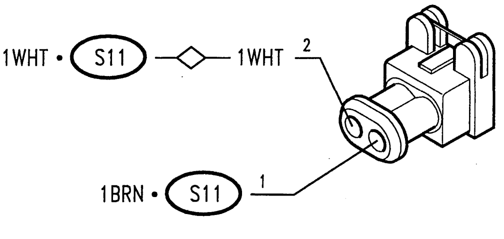

Motronic control unit

S11

2.0 T.S. 16V

M2.10.3

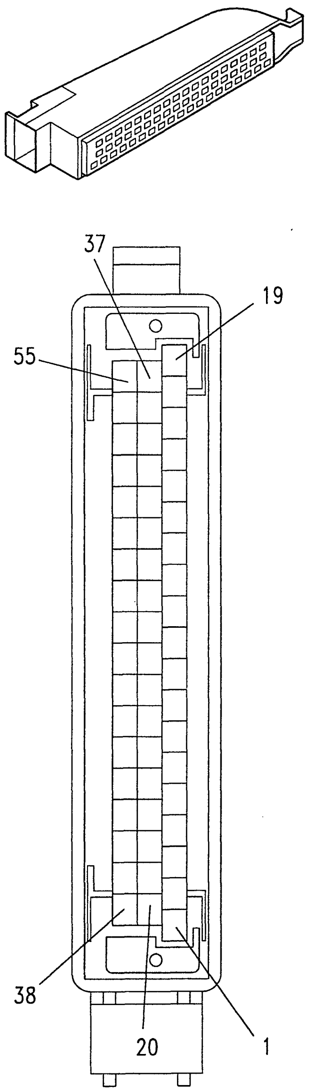

1 1.5LTB-YEL • A8 [1]
2 2.5BLK • G60
3 1GRY-BLK • S12a
4 1LTB-BLK • S29
5 1ORN • M15
6 1BRN-WHT • G133a
7 1WHT-BLK • S5
8 1GRN • S52
9 1LTB • G133a
10 1GRN • S35
11 1RED • S20
12 1GRY-GRN ◇ 1LTB-WHT • S38
GRY-RED • S52
13 1LTB-WHT • T1
14 1.5BLK • G60
16 1YEL-BLK • S3 [3]
17 1YEL • S3 [1]
18 2.5RED • S46
19 1.5BLK ◇ 1.5BLK • G60
20 1.5LTB-BLK • A8 [3]
21 1.5LTB-WHT • A8 [4]
22 1ORN-BLK • S29
24 1.5BLK • G60
26 1GRN • S5
27 1PNK • S42
28 1BLK • S35
30 1WHT ◇ 1WHT • S34
1WHT • S38
1WHT • S7
1WHT • S20

32 1BRN-BLK • G337
33 1GRY-RED • L46
34 1YEL-RED • S3 [2]
35 1YEL-GRN • S3 [4]
36 1GRN-BLK • S41
37 1.5GRY ◇ 1RED-WHT • S41
38 1.5LTB-RED • A8 [2]
40 1GRN-WHT • G337
41 1GRY-YEL • G337
45 1BRN • S7
48 1BLK • S31
49 1YEL • S31
51 RED-GRN • G133b
52 1BLK-PPL • S12c
53 1PPL-WHT • S38
54 1PNK-BLK • S34
55 1WHT-GRN • G133b

Motronic control unit

S11

2.0 T.S. 16V

M2.10.4

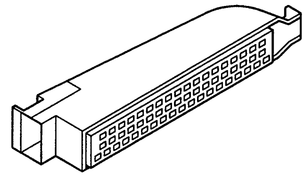

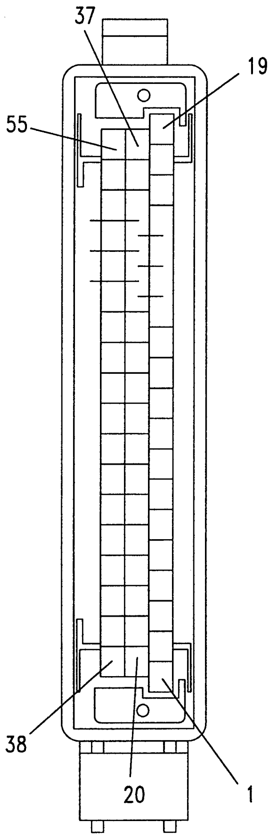

1 1.5LTB-YEL • A8 1
2 2.5BLK —◇— 6BLK • G60
3 1GRY-BLK • S12a
4 1LTB-BLK • S29
5 1ORN • M15
6 1BRN-WHT • G133a
7 1WHT-BLK • S5
8 1BRN-GRN • S52
9 1LTB • G133a
10 BLK • S35
11 RED • S20
12 1GRY-GRN —◇— 1LTB-WHT • S38
  BLU-YEL • S52
14 1.5BLK
16 1YEL-BLK • S3 3
17 1YEL • S3 1
18 1RED —◇— 4RED • S36
19 1.5BLK —◇— 1.5BLK —◇— 6BLK • G60
20 1.5LTB-BLK • A8 3
21 1.5LTB-WHT • A8 4
22 1ORN-BLK • S29
24 1.5BLK —◇— 6BLK • G60
25 RED-GRN • G133a
26 PNK-WHT • G133a
27 1ORN-BLK —◇— 1ORN-BLK • G133a
  1ORN • S41
28 GRN • S35
30 1WHT —◇— 1WHT • S34
  1WHT • S38
  1WHT • S7
  1WHT • S20
  1GRN • S5
32 1BRN-BLK • G133a
33 1GRY-RED • L46
34 1YEL-RED • S3 2
35 1YEL-GRN • S3 4
36 1GRN-BLK • S41
37 1.5RED-BLK —◇— 2.5RED-WHT • S41
38 1.5LTB-RED • A8 2
40 1GRN-WHT • G133a
43 1GRY-BLK • G133a
44 PPL • G133a
45 1BRN • S7
47 1LTB-YEL • G133b
48 BLK • S31
49 YEL • S31
51 RED-GRN • G133b
52 1BLK-PPL • S12c
53 1PPL-WHT • S38
54 1PNK-BLK • S34
55 1WHT-RED • T1

Motronic control unit

S11

3.0 V6

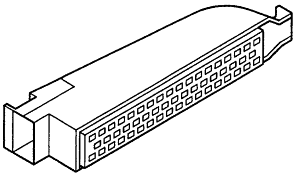

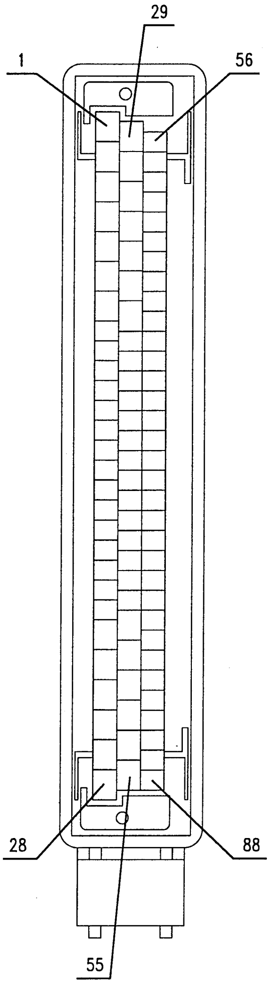

1 1GRY-BLK • S12a
2 1ORN-BLK • S29
3 1YEL • S3 $\boxed{1}$
4 1YEL-BLK • S3 $\boxed{2}$
5 1YEL-GRN • S3 $\boxed{3}$
6 1.5BLK • G131a
8 1RED-GRN • G133b
9 1GRY-RED • L46
11 BLK • S35
12 GRN • S35
14 1GRN • S5
16 BLK • S31
24 1GRY • A8
25 1LTB • A8
26 1RED • S46
27 1GRN-YEL • S41
28 1BLK ◇ 1BLK • G131b
29 1LTB-BLK • S29
31 1YEL-RED • S3 $\boxed{4}$
32 1YEL-BLU • S3 $\boxed{5}$
33 1GRY-YEL • S3 $\boxed{6}$
34 1.5BLK • G131a
36 1ORN • M15
41 1WHT-BLK • S5

42 1LTB • G133a
43 YEL • S31
44 1GRY • S52
47 1BRN-WHT • G133a
48 1BRN • G337
52 1.5GRN • A8
54 1.5RED-BLK ◇ 4RED-BLK • S41
55 2.5BLK ◇ 2.5BLK • G131a
56 1PNK-BLK • S42
59 1LTB-WHT • S38
64 1GRN-WHT • G337
65 1GRY-YEL • G337
69 RED • S20b
70 YEL • S20a
71 1BLK ◇ BLK • S20a
WHT • S20b
72 1WHT ◇ 1WHT • S34
1WHT • S7
1WHT • S38
73 1YEL • S38
77 1PNK-WHT • S34
78 1BRN • S7
87 1LTB-YEL • T1
88 1WHT-GRN • G133b

Motronic fuel pump relay

S12a

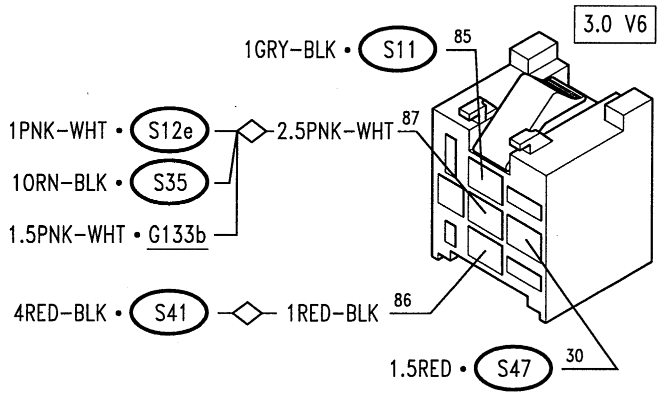

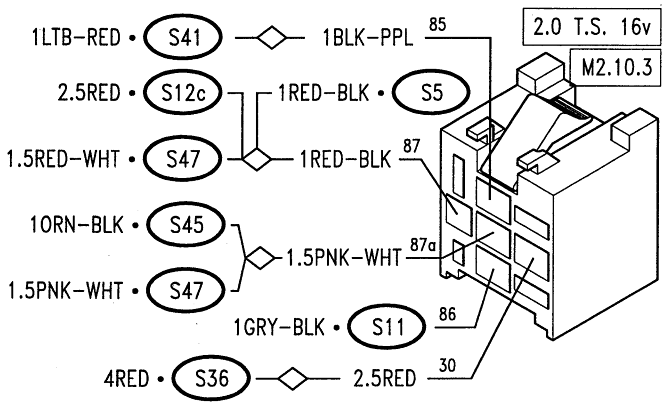

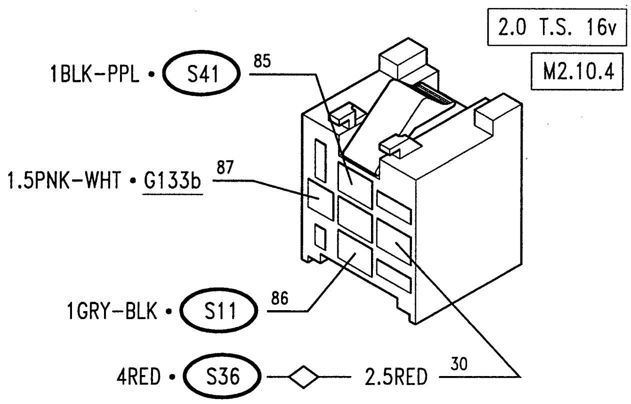

Phase variator relay

S12c

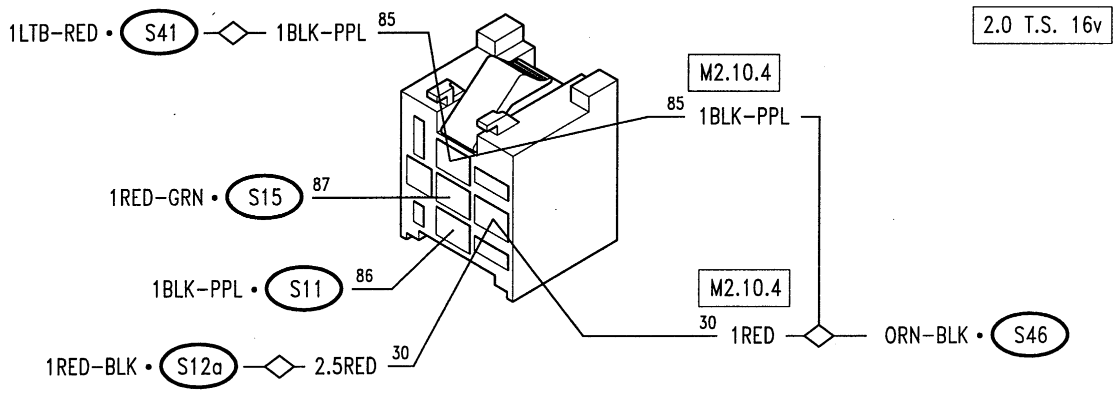

Air flow meter relay

S12e

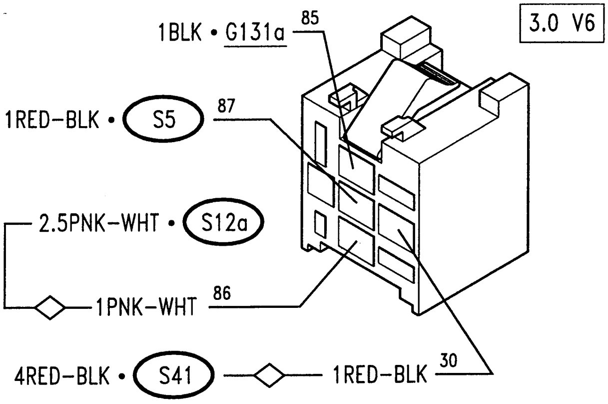

Phase variator

S15

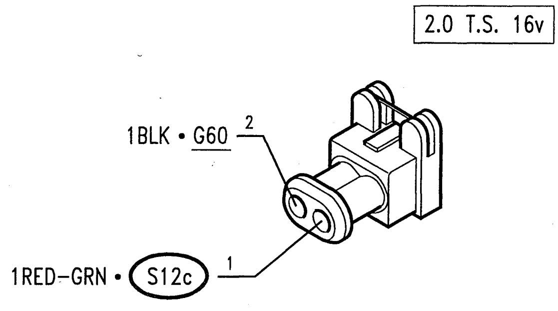

Pinging sensor

S20

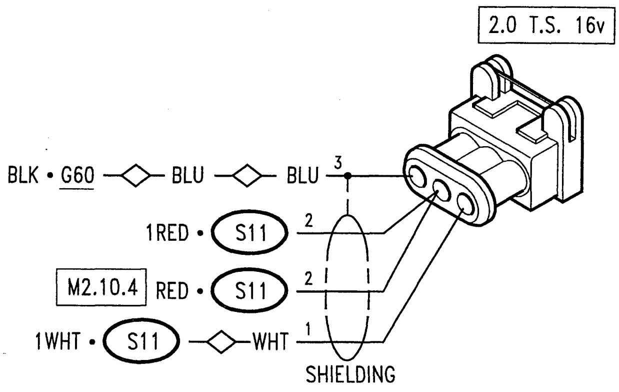

Pinging sensor

S20a

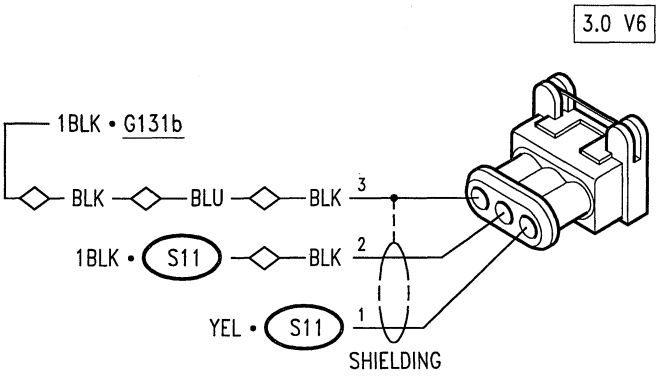

Pinging sensor

S20b

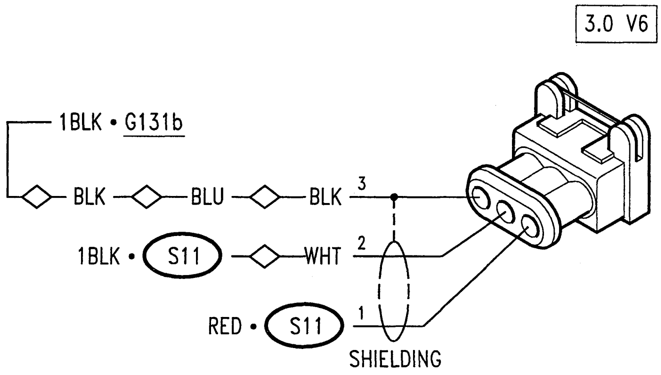

Idle adjustment actuator

S29

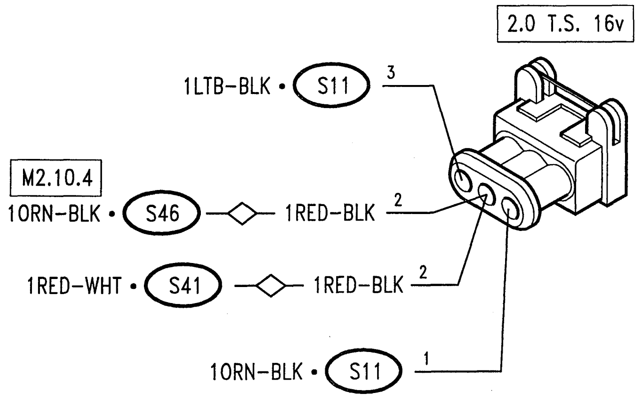

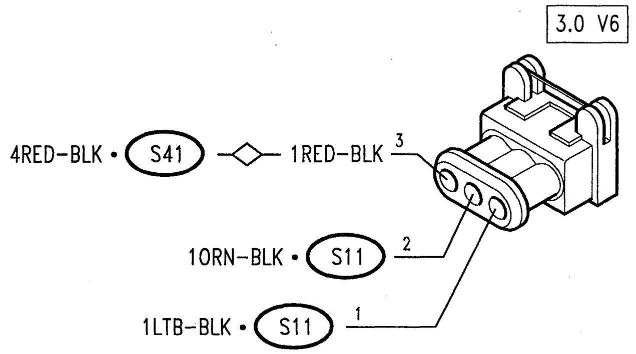

Rpm and crankshaft position sensor

S31

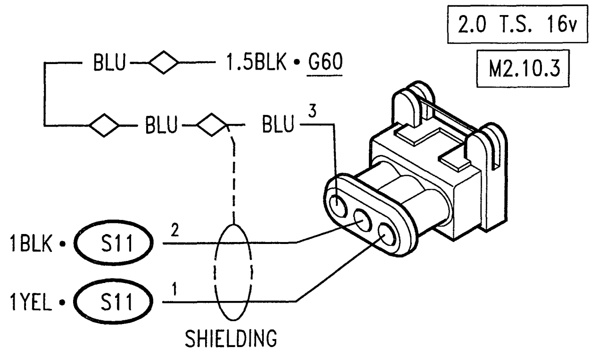

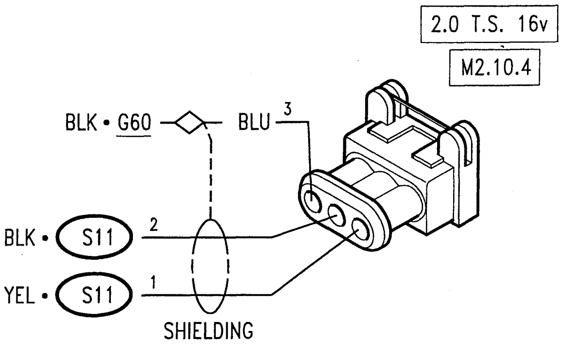

Rpm and crankshaft position sensor

S31

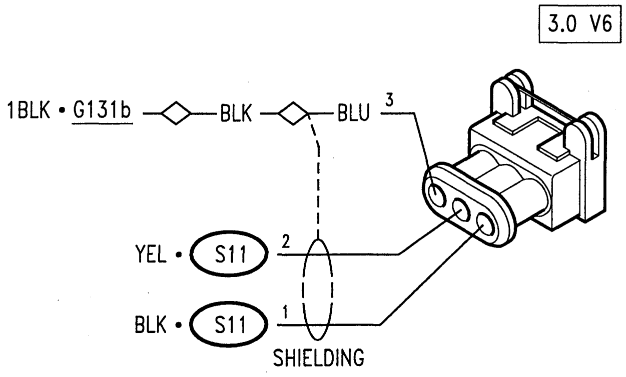

Air temperature sensor

S34

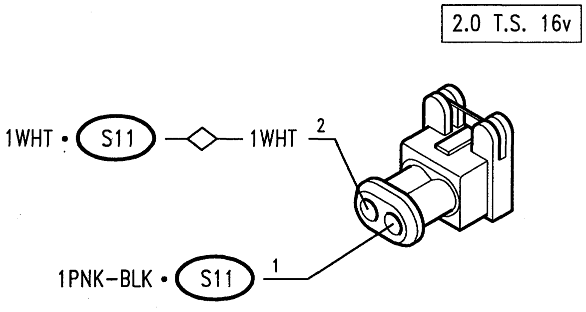

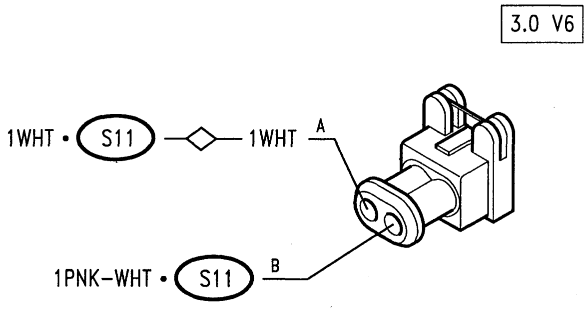

Heated lambda probe

S35

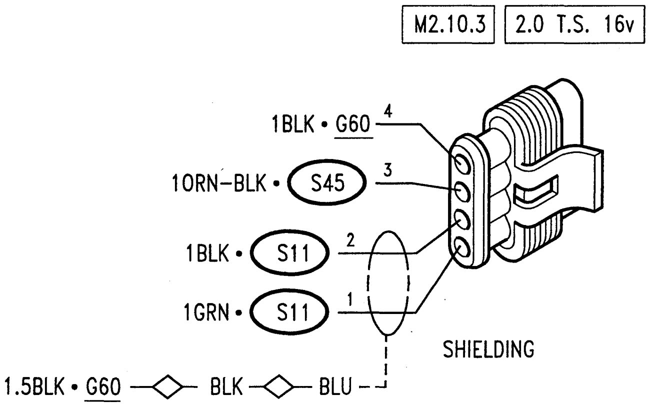

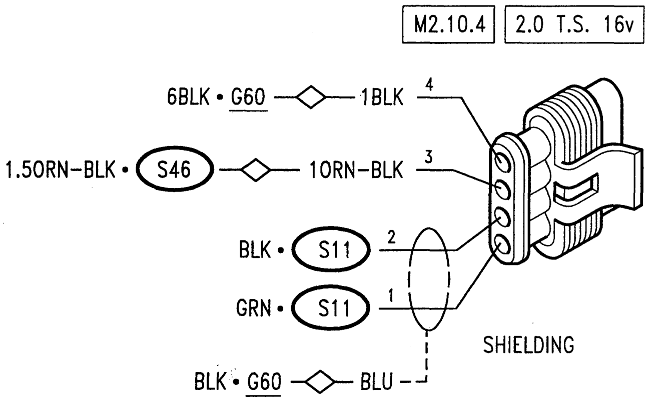

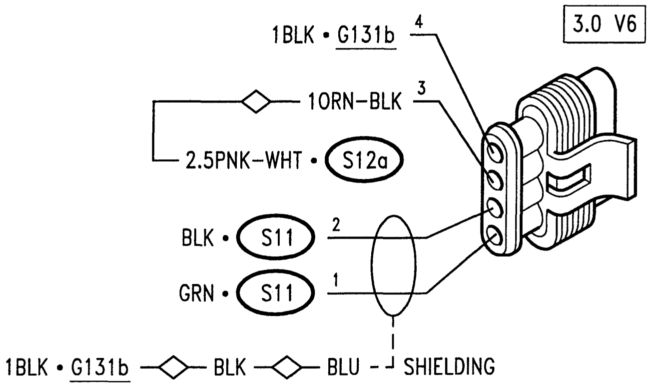

Fuse for injection relay

S36

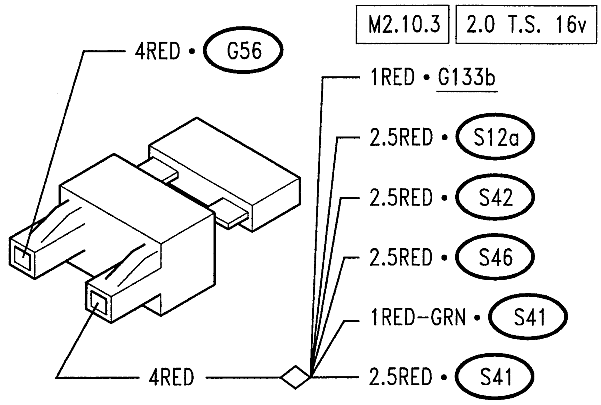

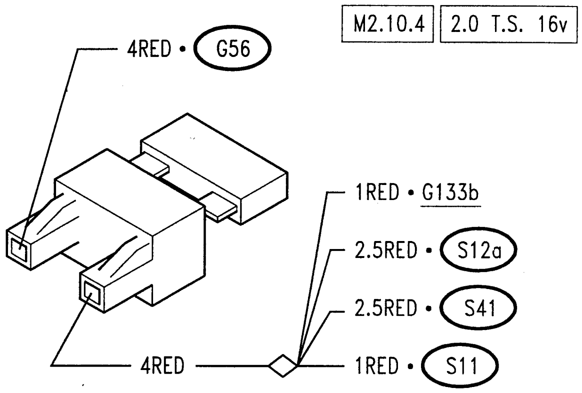

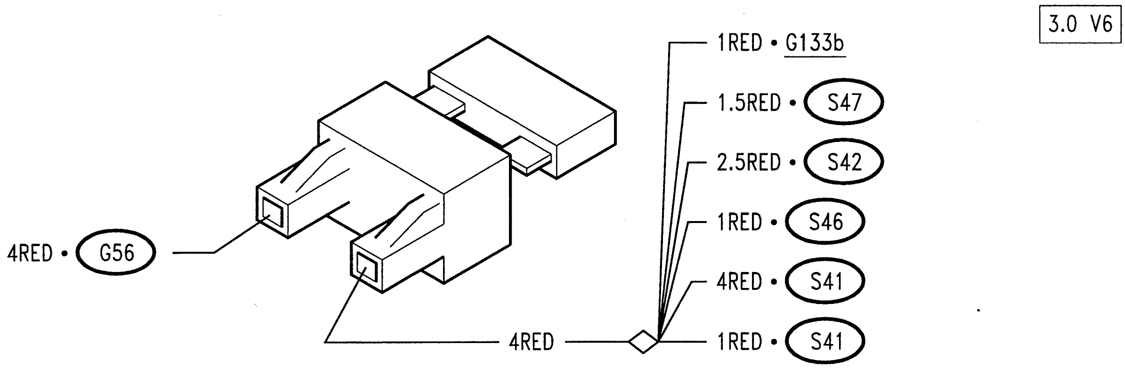

Sensor on throttle body

S38

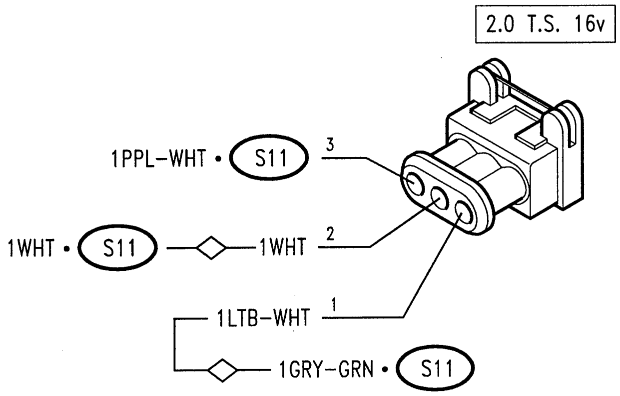

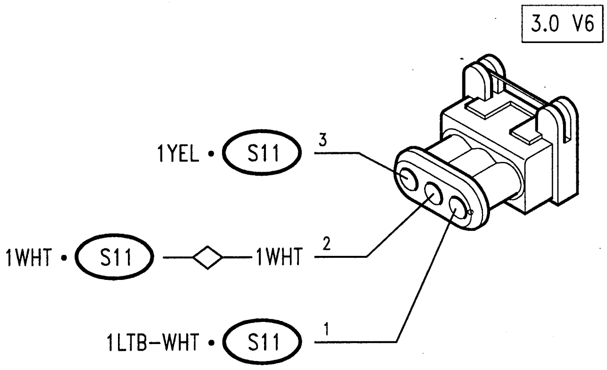

Main relay

S41

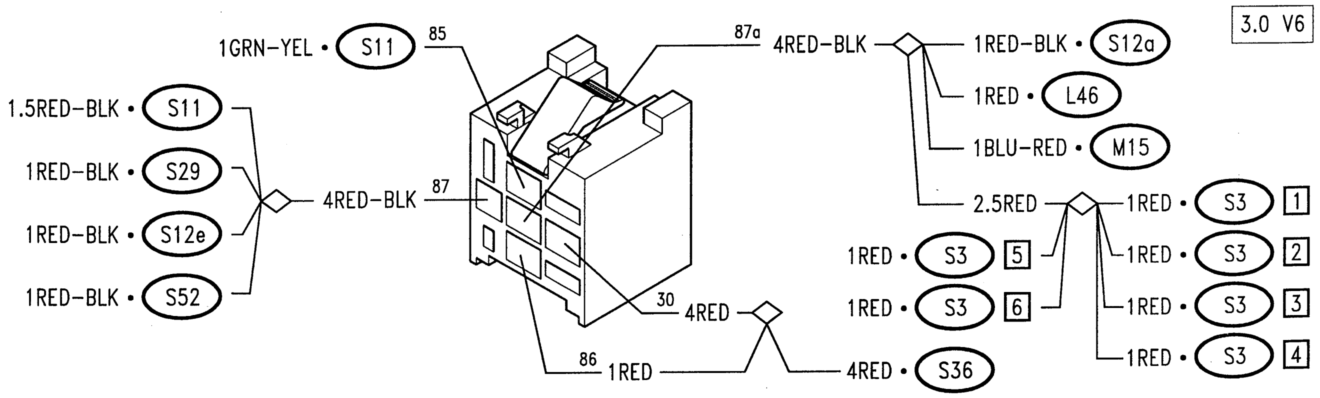

Main relay

S41

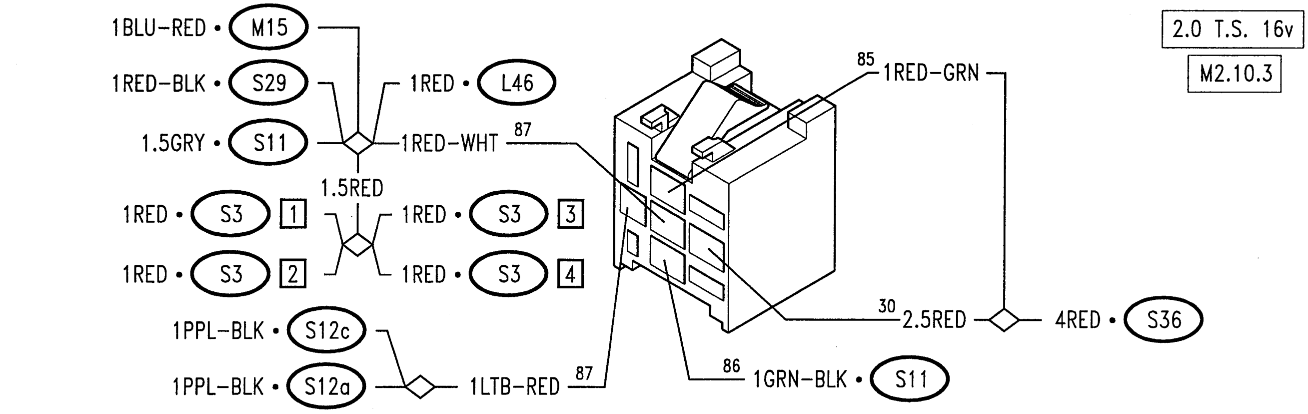

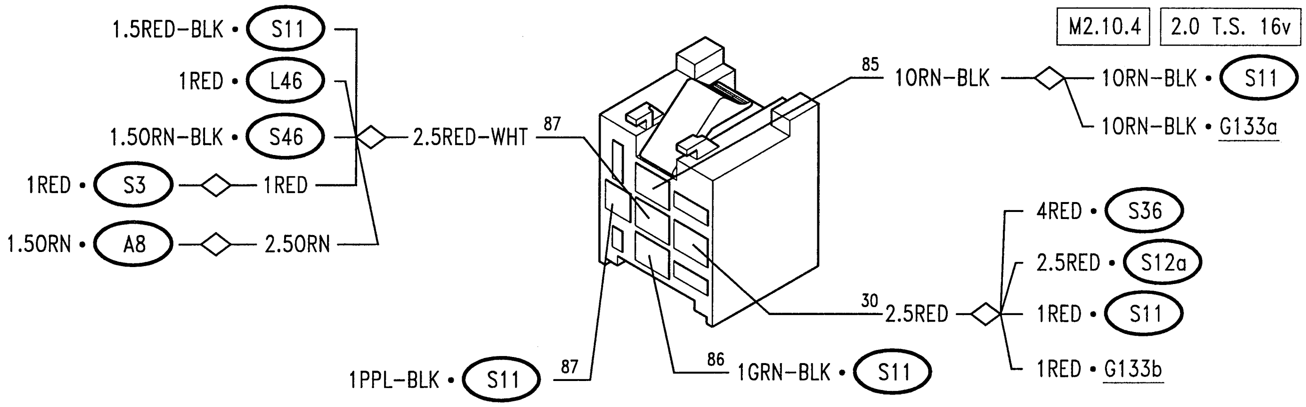

Secondary relay

S42

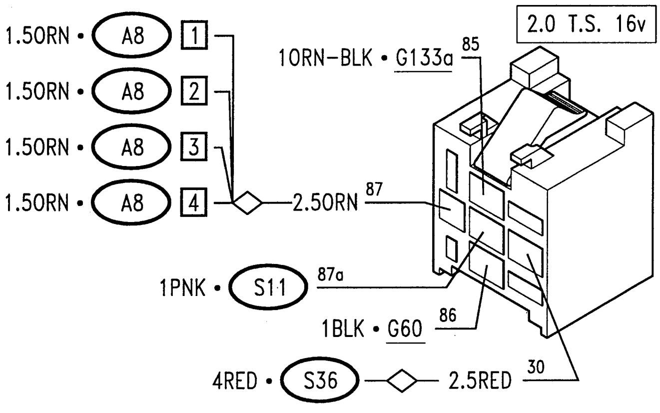

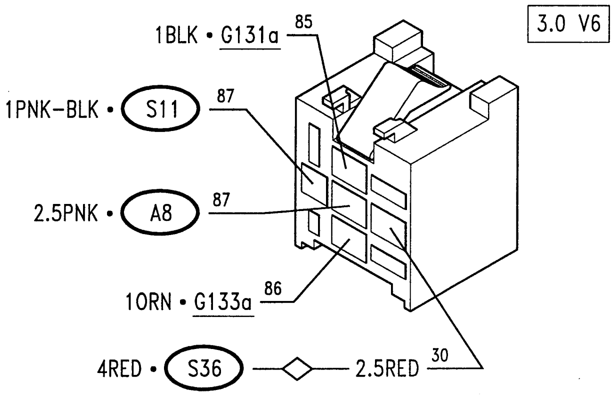

Lambda probe fuse

S45

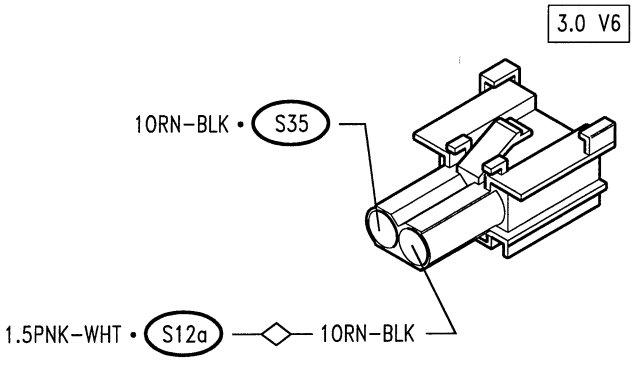

Fuse for Motronic supply S46

M2.10.3 | 2.0 T.S. 16v

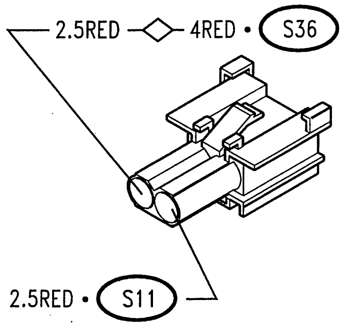

M2.10.4 | 2.0 T.S. 16v

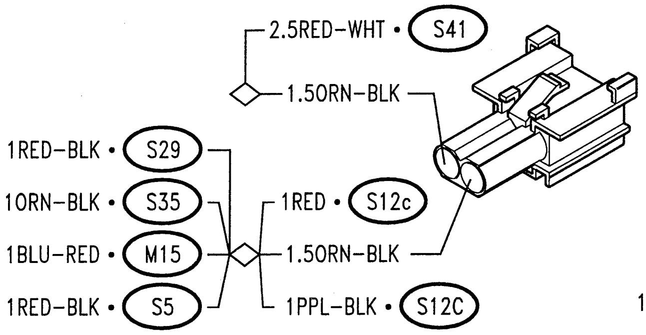

3.0 V6

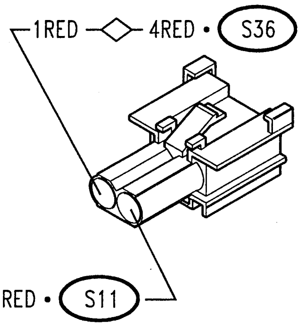

Fuse for fuel pump S47

2.0 T.S. 16v

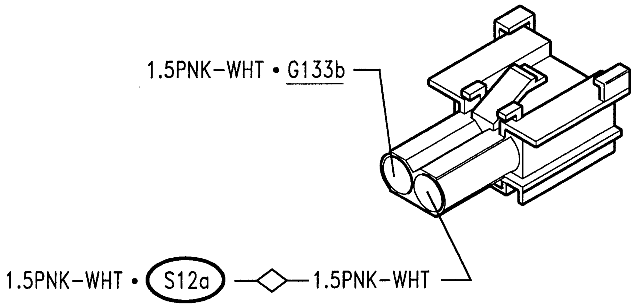

3.0 V6

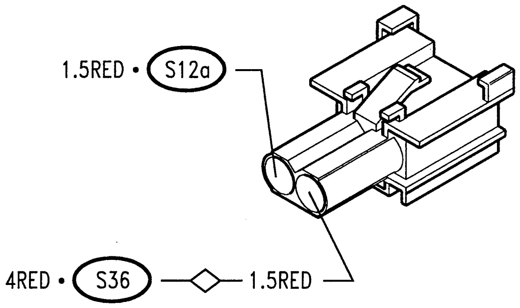

Cam angle sensor S52

M2.10.3 | 2.0 T.S. 16v

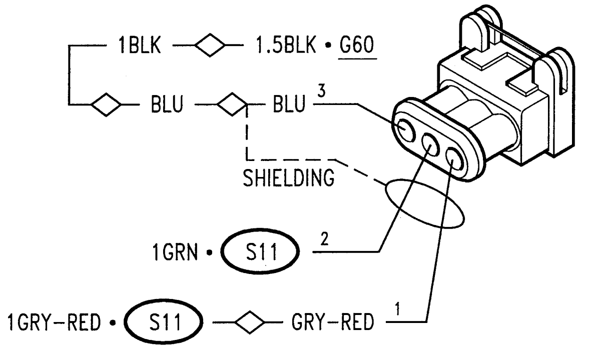

M2.10.4 | 2.0 T.S. 16v

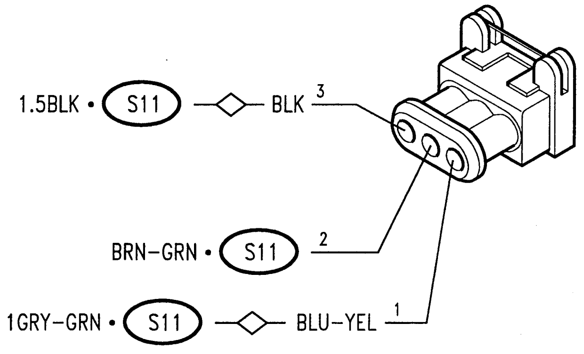

3.0 V6

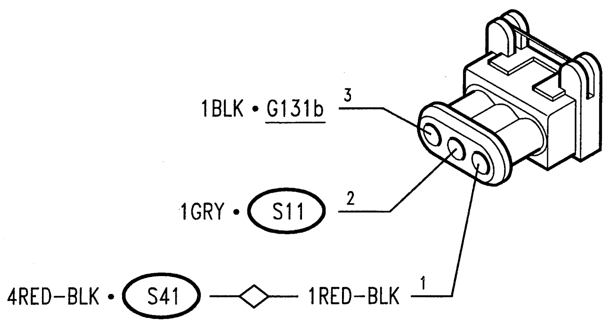

Connector for ALFA TESTER (Motronic and ALFA ROMEO CODE) T1

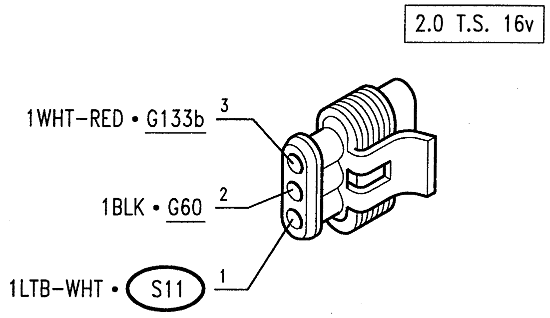

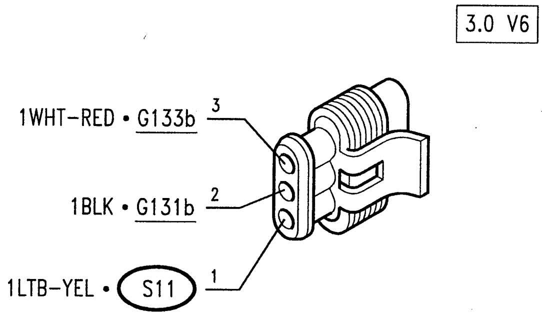

Connector for ALFA TESTER (airbag) T3

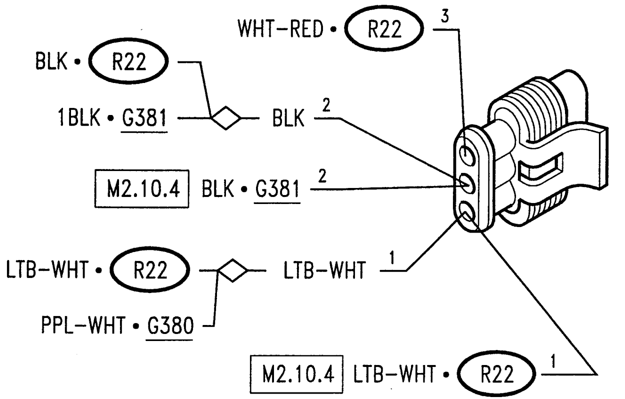

Connector for ALFA TESTER (anti-theft device) T7

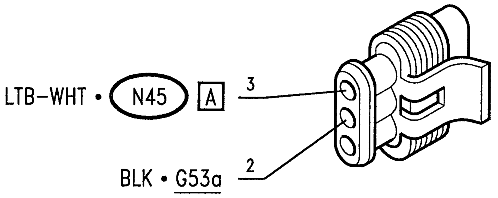

Connector for ALFA TESTER (ABS) T8

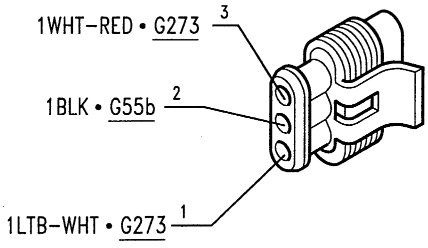

Diagnosis connector for ALFA ROMEO TESTER (automatic hood) T13

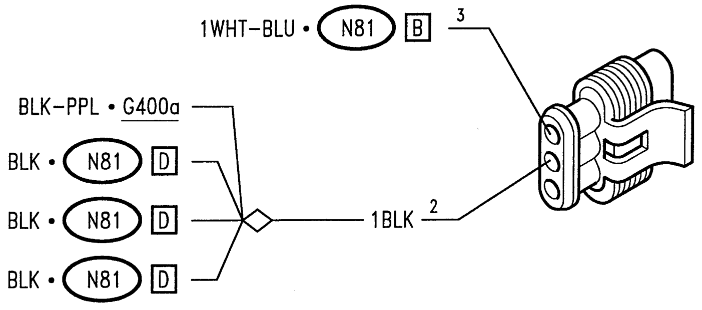

VARIANTS FOR Gtv 1996 TB

INDEX

ELECTRIC SYSTEM

55

ELECTRIC SYSTEM DIAGNOSIS

55

FOR THE INFORMATION NOT GIVEN HEREIN, REFER TO THE CORRESPONDING GROUP OF "SPIDER-GTV".
THE REFERENCE ENGINE IS THE "6 CYLINDER " (3.0 V6 ENGINE)

IGNITION COIL

The high voltage in the ignition system is guaranteed mainly by the energy accumulated in the ignition coil. The coil is formed of two copper windings with an iron core, overlaid on one another and insulated from one another by the different potential.
The current of the primary winding is cut off in correspondence of the firing point and after the accumulation phase. In the same instant, the magnetic field drops inducing a spark voltage in the secondary winding.

REMOVING/REFITTING

- Disconnect the battery (-) terminal.
- Remove the air flow meter (see specific paragraph).

1. Disconnect the high voltage cable from the ignition coil.

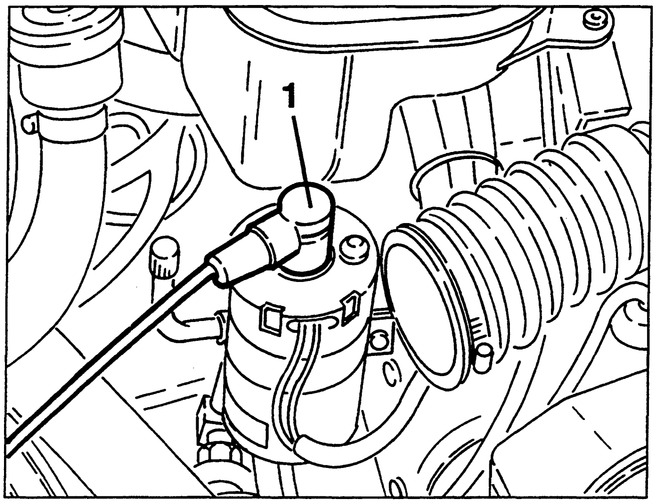

1. Remove the plastic protection, then disconnect the low voltage cables from the ignition coil.
2. Slacken the fastening screws and remove the ignition coil complete with support bracket.

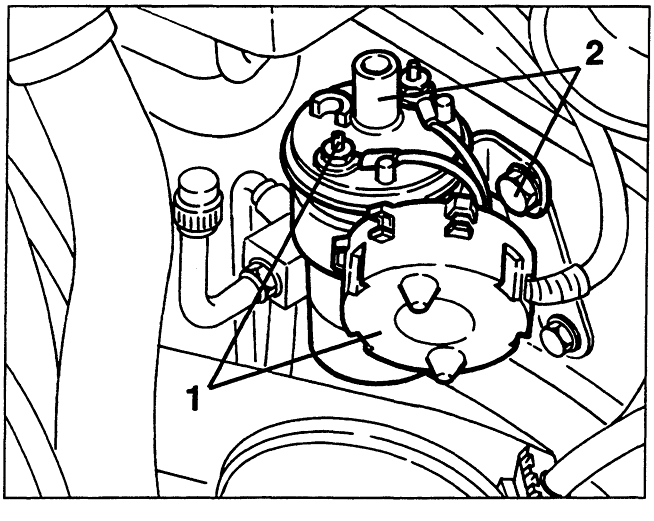

POWER MODULE

REMOVING/REFITTING

- Disconnect the battery (-) terminal,

1. Disconnect the electrical connection from the power module.
2. Slacken the two fastening screws and remove the power module complete with support bracket.

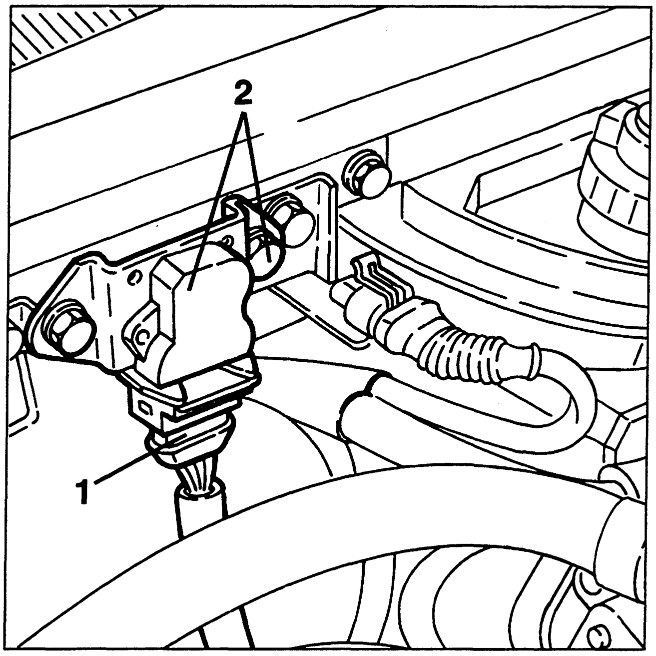

IGNITION DISTRIBUTOR

The purpose of the ignition distributor is to distribute the high voltage leading from the ignition coil to the single spark plugs. The ignition distributor is installed on the left-hand cylinder head and its rotary brush is turned directly by the camshaft.

REMOVING/REFITTING

- Disconnect the battery (-) terminal.

1. Disconnect the high voltage cables from the ignition distributor.
2. Slacken the three fastening screws and remove the distributor cap.

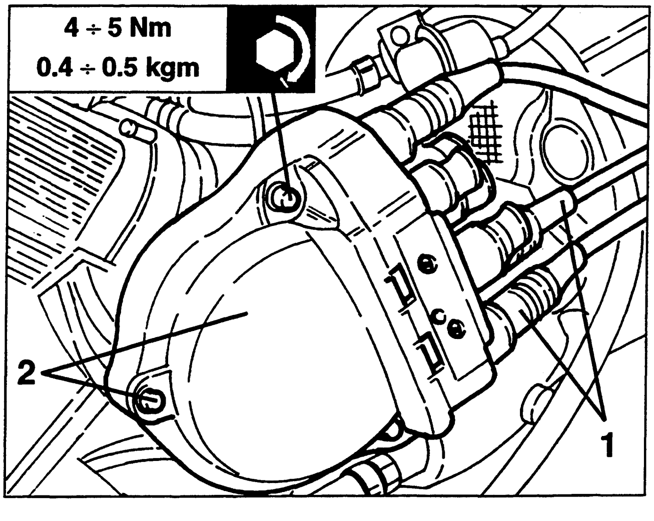

1. Slacken the three fastening screws and remove the rotary brush.
2. Remove the protection.
3. Slacken the two fastening nuts and remove the ignition distributor body.

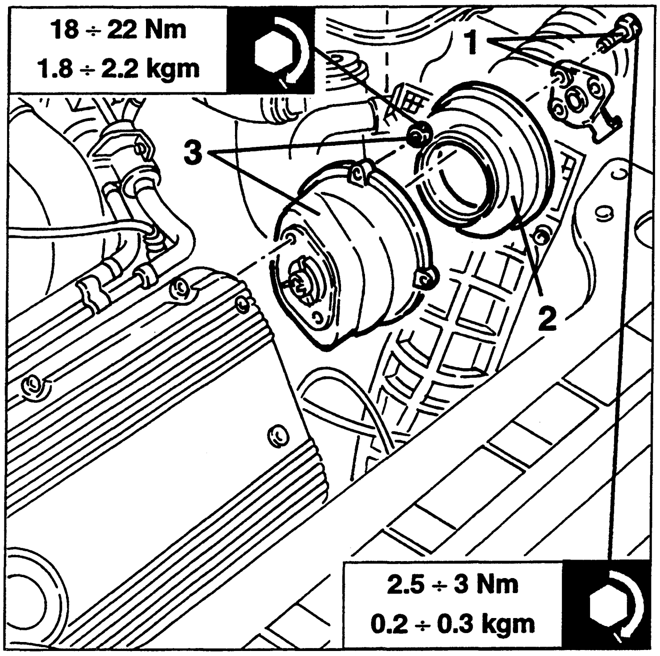

SPARK PLUGS

The standard spark plugs installed are of the surface discharge type with four peripheral points and a centre electrode.

In order to operate correctly the gap between the peripheral points and the centre electrode must be correct.

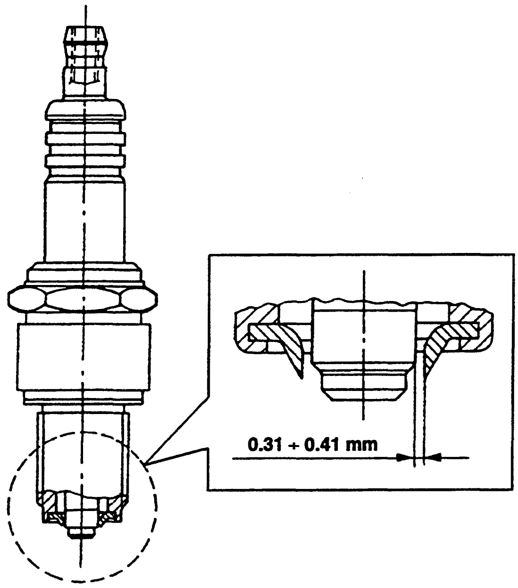

Firing order
1 - 4 - 2 - 5 - 3 - 6

CHECKING AND REPLACEMENT

- With the engine cold, remove the spark plugs, firstly blowing inside the spark plug openings to remove any impurities and traces of dirt.

- Check the spark plugs for dirt and the ceramic insulation for breaks. In this case replace the spark plugs.

WARNING:
The use of spark plugs with different characteristics or sizes than those specified can cause serious damage to the engine and change the level of harmful emission at the exhaust.

WARNING:
A dirty or worn out spark plug is often the sign of a failure in the engine supply system.
For example:
- **Traces of carbon dust: incorrect mixture, air cleaner very dirty.**
- **Spots of oil: oil leaking from the piston rings.**
- **Formation of ash: presence of aluminium materials, contained in the oil.**
- **Burnt electrodes: overheating due to unsuitable fuel, defects in the valves.**
- **High electrode wear: harmful additives in the fuel or in the oil, pinging in the cylinder head, overheating;**
- **Etc.**

- When installing tighten the spark plugs to a torque of:

25 ÷ 34 Nm
2.5 ÷ 3.5 kgm

STARTER MOTOR

The starter motor starts engine rotation, overcoming the inertial forces and friction and bringing it to a determinate rpm to start the formation of the mixture needed for combustion, thus the autonomous motion of the engine.
The motion is transmitted by a direct current electric motor operated by the battery through a coupling pinion which turns the ring gear fitted on flywheel.

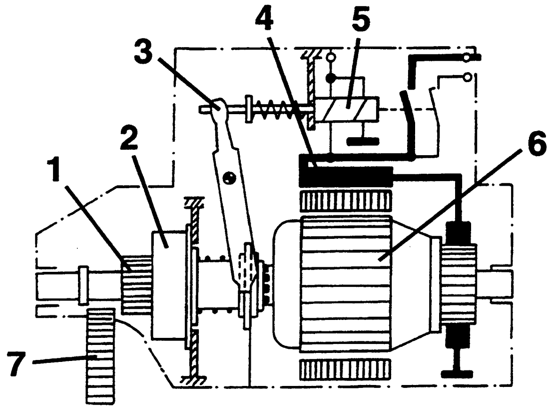

1. Pinion	*5. Relay*
2. Roller idler gear	*6. Rotor*
3. Coupling lever	*7. Flywheel ring gear*
4. Energizing winding	

Owing to an idler gear coupling, the pinion is disengaged when the main engine turns faster than the motor. A relay energized by the motor current engages the pinion through a fork.
The starter motor is of the pinion screw and translation type, with relay housed directly above the motor itself.

REMOVING/REFITTING

- Set the car on a lift.
- Disconnect the battery (-) terminal.

1. Disconnect the electrical connection of the lambda sensor

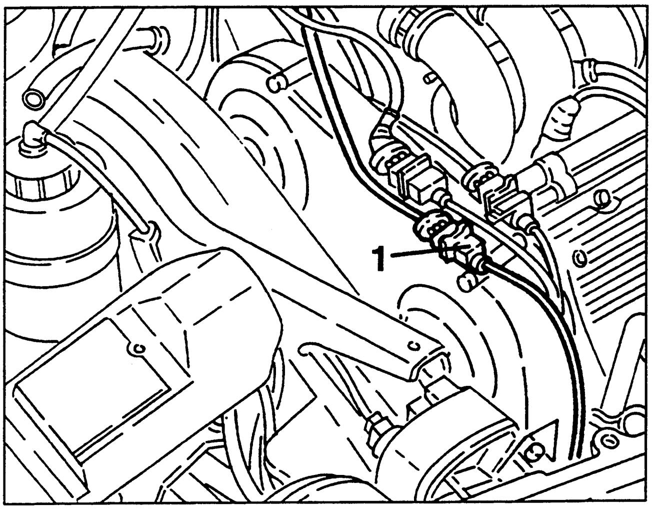

1. Raise the car, slacken the fastenings and remove the front section of the exhaust pipe complete with lambda sensor.
2. Slacken the fastenings and remove the exhaust gas delivery pipe from the right-hand cylinder head manifold to the turbocharger.

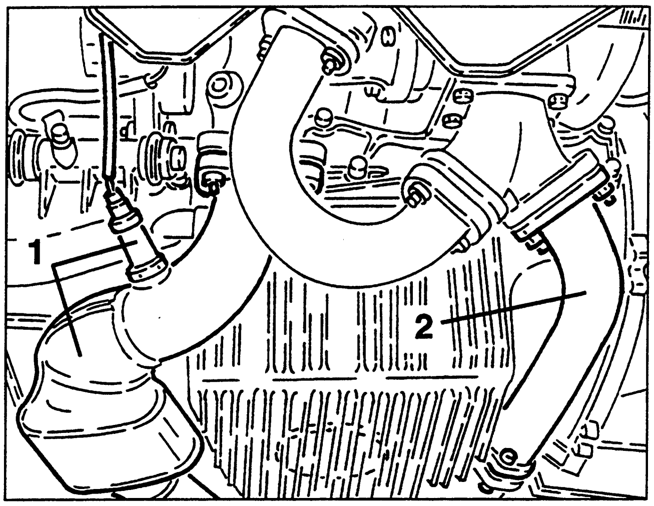

1. Slacken the fastening nuts and remove the exhaust manifold from the right-hand cylinder head.

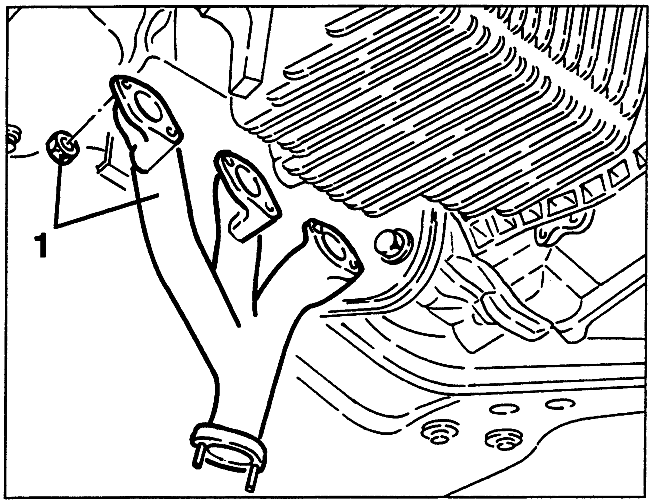

1. Disconnect the electrical connections from the starter motor.
2. Slacken the fastening screws and remove the starter motor.

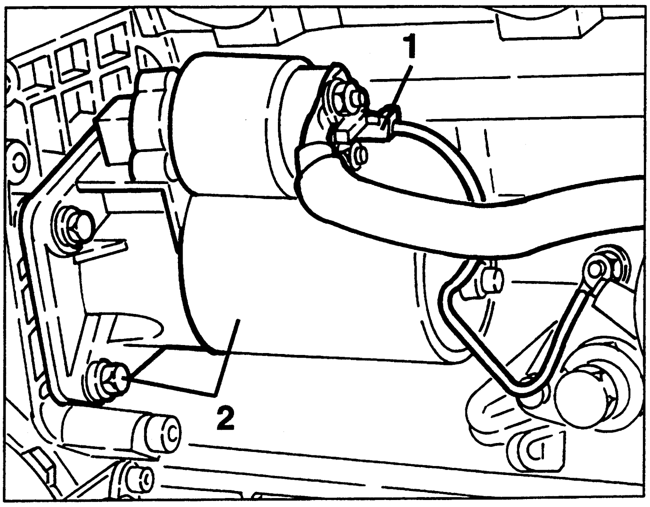

BATTERY

The battery has been designed to ensure that the engine starts in the shortest time possible. For this reason a high torque and a predefined engine rpm are required. This is ensured by the optimal sizing of the 6 elements contained inside the battery, each of which delivers a voltage of ~ 2 V (12 V in all).
It maintains the charge much longer and also contains diluted sulphuric acid; for this reason it is necessary to keep it in the upright position even when it is not installed in the car. The battery body also has small ventilation holes to minimise the formation of gas during charging. Due to the reduction of the of gas produced, there is no corrosion and good contact at the terminals is ensured.
The advantages of this battery are:
- highly reduced water consumption due to the new type of alloy used in the manufacture of the grills and plates, for which reason topping up is no longer necessary;
- excellent starting capacity, as a result of very low self- discharging of up to seven months thus enabling long term storage (at temperatures below 28°C).

When the vehicle is travelling the alternator recharges the battery; whenever the charge is insufficient or the connection between the alternator and the battery is cut off, a warning light on the instrument cluster turns on to indicate a circuit failure.

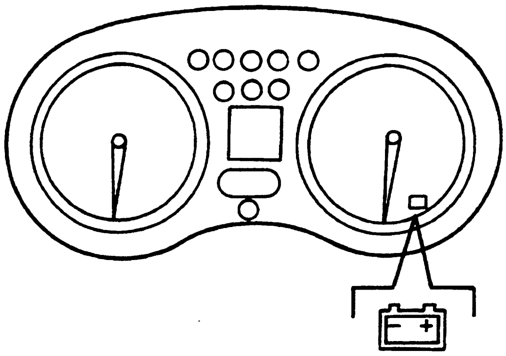

If the battery appears to be flat, check the charge measuring the loadless voltage on the terminals using a Voltmeter. If the voltage is below 12.30 V it is 50% charged; if it reaches 12.48 V it is 75% charged; and at 12.66 V it is 100% charged.

WARNING:
If the electrolyte level in one or more cells of the battery has fallen below the minimum mark on the plastic container, carefully open the cap cover and add distilled de-ionized water, as with ordinary batteries.

NOTE: It is highly unadvisable to recharge the battery quickly at voltages above 15.5 V.
When recharging use a normal 12 V battery charger, connecting the positive cable (red) to the battery (+) terminal and the negative cable (black to the battery (-) terminal.
If the battery of the vehicle is connected temporarily to an external battery, connect the positive terminal to the positive terminal and the negative terminal to the negative terminal.

WARNING:
- Do not connect or disconnect the battery to or from the electrical system of the car when the engine is running.
- Do not invert the terminal connections (even for a moment) as this would damage the alternator rectifier.
- When connecting the battery charger to the battery, firstly connect the cables and then start the battery charger.
- If it becomes necessary to start the engine with temporary cables and with an auxiliary battery, the voltage of the latter must not exceed 12 V.
- Before recharging the battery the clamp should be removed from the negative terminal.
- When charging make sure that the temperature of the electrolyte does not exceed 45°C.
- Do not touch the positive and negative terminals at the same time with the hands.
- Keep all naked flames away from the battery when recharging.

When replacing the battery follow the directions for use.
If the charge of the replacement battery is potentially higher than that of the old one, the higher voltage might cause melting of the starter motor induction coil, or damage to the pinion or ring gear.

MAINTENANCE

The capacity of the battery to start the engine depends on the charge within it; it is therefore necessary to check it regularly and carry out any maintenance, especially in winter due to the greater load exerted on the starter motor and the reduced battery capacity at low temperatures.
Clean the surface of the battery, the terminals and clamps with a solution of water and sodium bicarbonate.
Before reconnecting the terminals, coat them with a layer of grease.

WARNING:
Do not let any of the fluid used for cleaning get into the battery as it will react with the electrolyte. The electrolyte fluid is an acid, therefore dangerous for the eyes, hands and clothes.

NOTE:
Batteries stored in a warehouse or installed on cars left unused for long periods will slowly lose their charge, so it will be necessary to recharge them before use.

REMOVING/REFITTING

- Working from the boot, remove the spare wheel and gain access to the battery tilting the special cover.
1. Firstly disconnect the battery (-) terminal and then the (+) terminal, then remove it after slackening the fastening clamp screw.

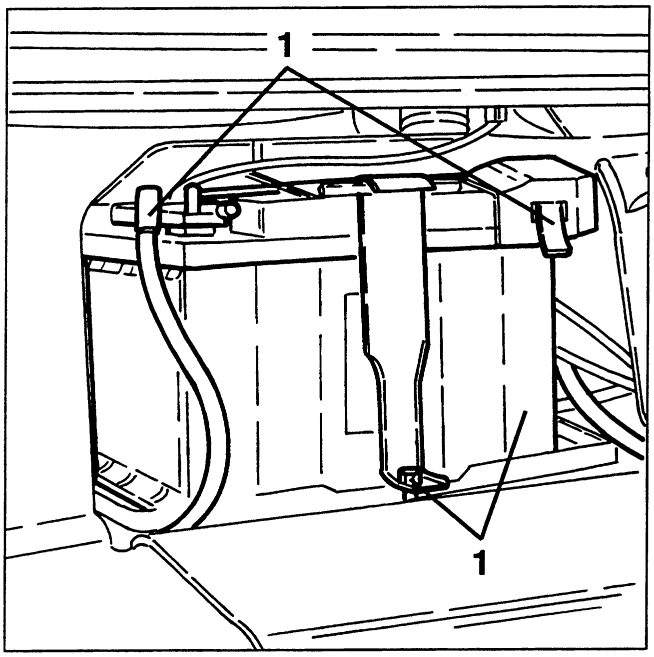

ALTERNATOR

When the engine is running the alternator supplies electrical energy to the electronic control units and to the various services which can be operated at all times.
It also charges the accumulator (battery), so that it can deliver current when the engine is stationary.
The electric current is produced by a stator which "cuts" the magnetic field generated by a rotary coil (rotor). The rotor is integral with a pulley operated directly by the crankshaft through a belt.
The contact brushes supply the rotor with the excitation current.
The alternate current generated by the alternator is rectified by the diodes and adjusted by the voltage regulator located on the alternator body.
The electronic voltage regulator used is compact in size and it warrants constant voltage in all fields of operation of the engine, regardless of the changes in load and rpm.
A cooling fan turns together with the pulley to prevent the alternator from reaching dangerous temperatures that might adversely affect its operation.
The alternator installed is of the type with claw terminals and collector rings; it is very light and compact.

WARNING:
The fan will correctly cool the alternator if it turns clockwise (seen from pulley side).

REMOVING/REFITTING

- Set the car on a lift.
- Disconnect the battery (-) terminal.
1. Disconnect the lambda sensor electrical connections.

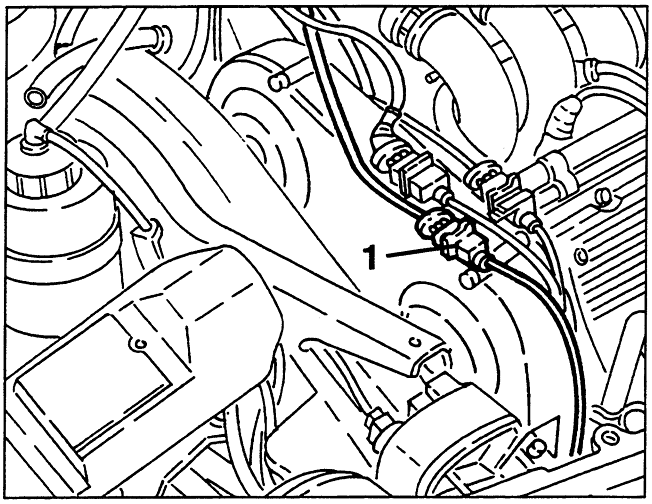

1. Disconnect the altitude sensor.
2. Slacken the fasteing screw ad remove the altitude sensor complete with support bracket.
3. Remove the engine stay connecting rod.
4. Remove the protective cover from the relay support bracket.

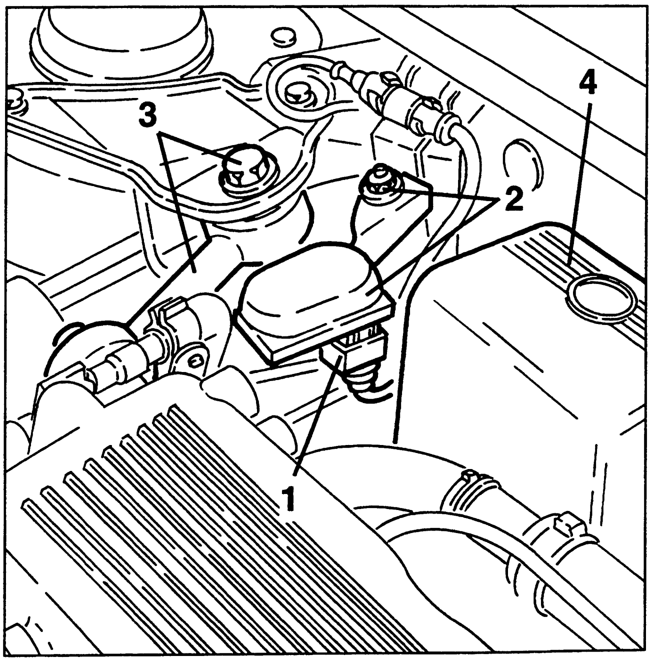

1. Slacken the fastening screws and move aside the relay support bracket and electrical connections.

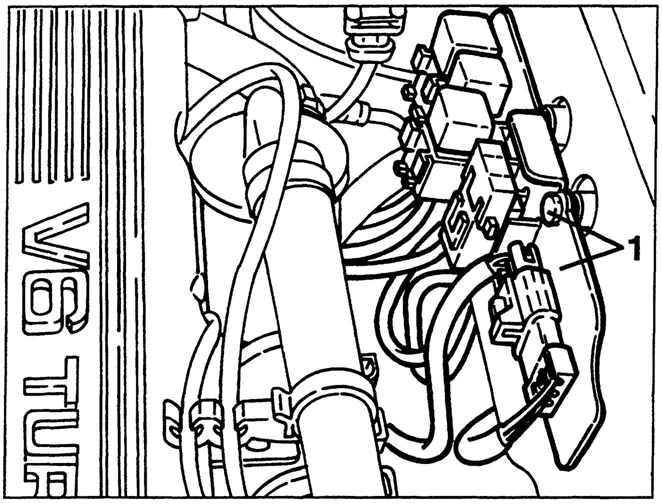

1. Disconnect the fuel vapour recovery pipe from the fuel distributor manifold

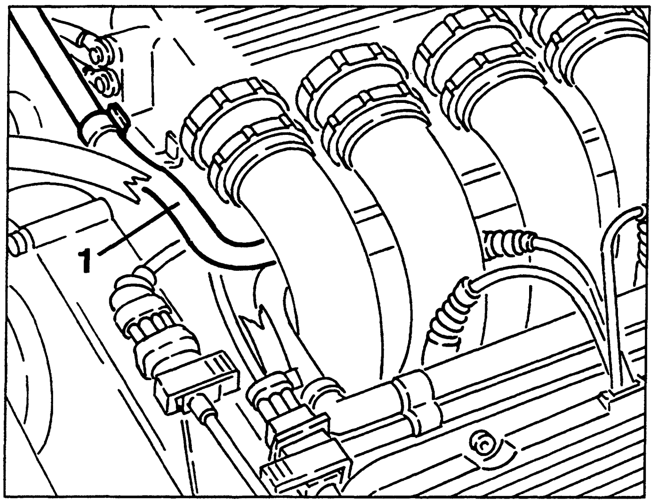

1. Disconnect the oil vapour recovery pipe from the oil vapour separator.

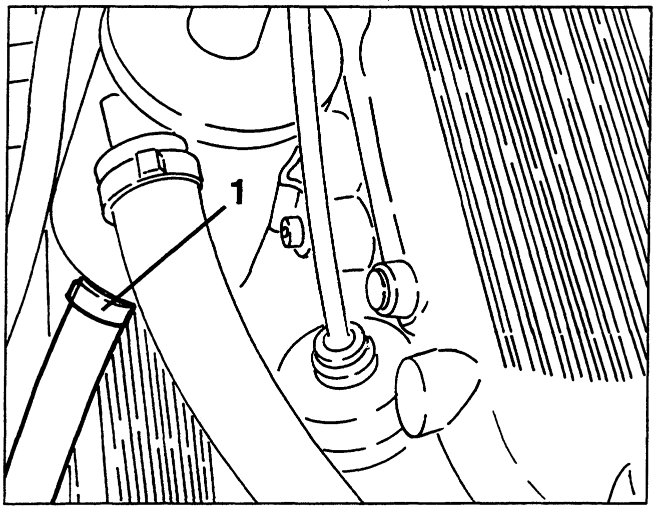

1. Slacken the fastening screws and remove the upper radiator crossmember.
2. Disconnect and move to one side the bonnet lock opening cable.

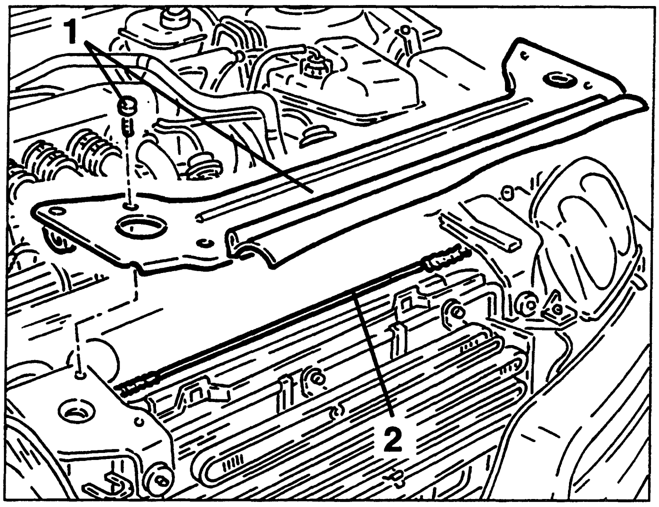

1. Disconnect the electrical connections from the cooling fans.
2. Slacken the fastening screw, then move aside the cable fairing complete with electric cables.

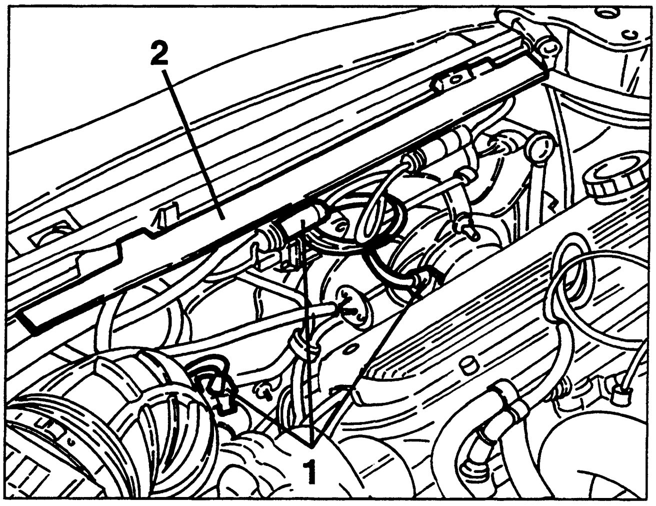

1. Withdraw and remove the cooling fans.

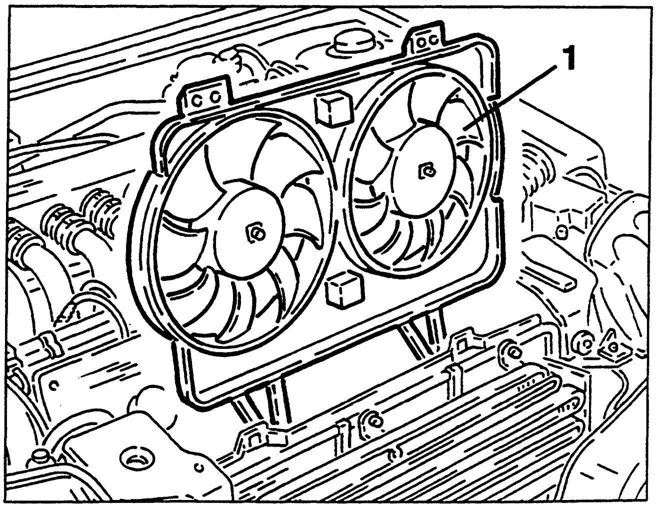

1. Raise the car, slacken the fastenings and remove the front section of the exhaust pipe complete with lambda probe.
2. Slacken the fastenings and remove the exhaust gas delivery pipe from the righthand cylinder head manifold to the turbocharger.

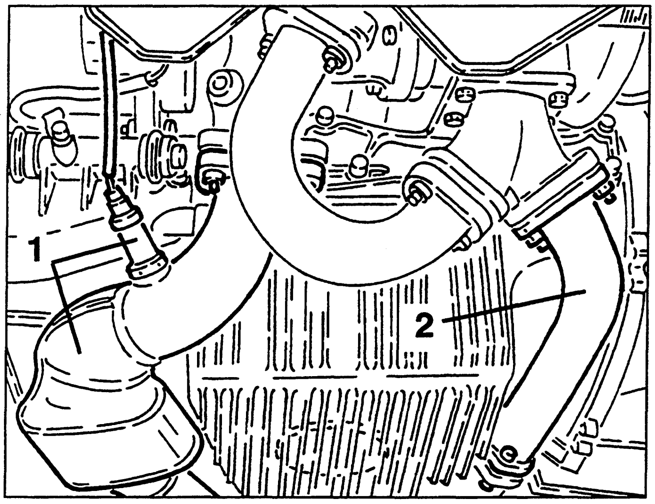

1. Slacken the fastening nuts and remove the right-hand cylinder head exhaust manifold.

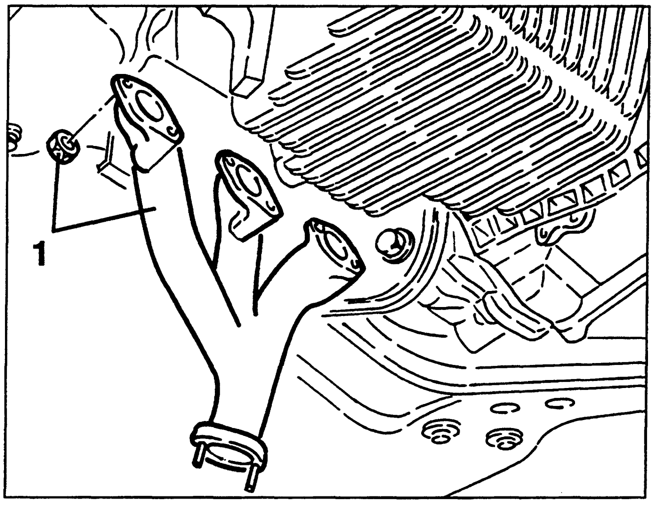

1. Slacken the locknut, then working on the screw of the micrometric belt tensioner slacken the tension of the alternator- water pump drive belt, then remove it.

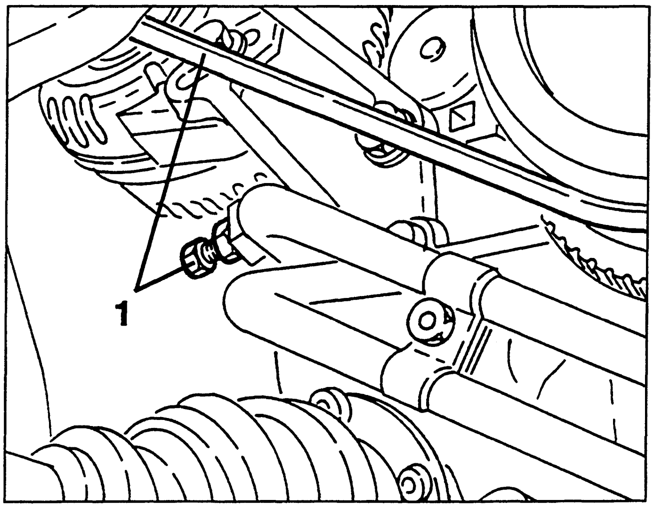

1. Position a hydraulic jack under the gearbox, then slacken the screw fastening the gearbox side power unit support.
- Lower the hydraulic jack just enough to be able to remove the alternator.

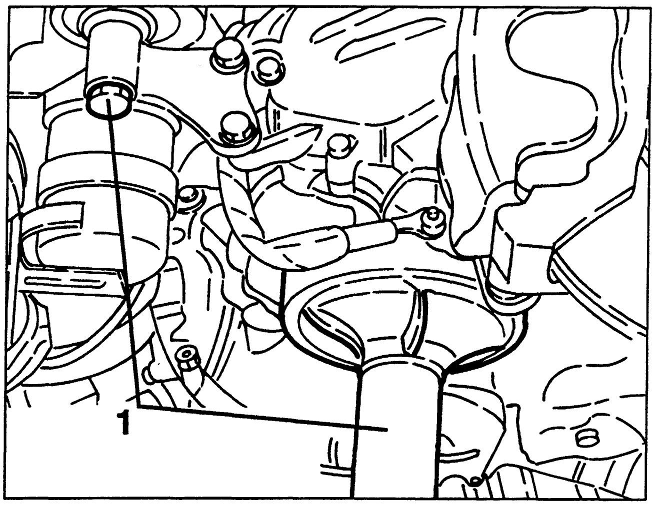

1. Slacken and remove the lower nut fastening the alternator.

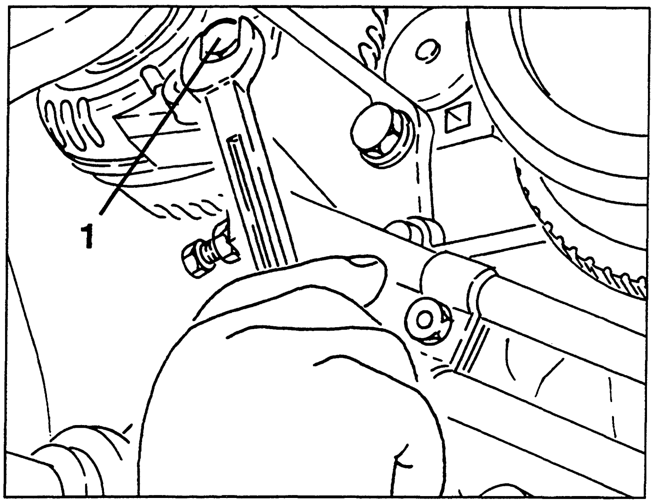

- Disconnect the electrical connections from the alternator.
1. Slacken the two screws fastening the upper alternator support bracket
2. Remove the alternator complete with upper support bracket and dis-assemble them on the bench.

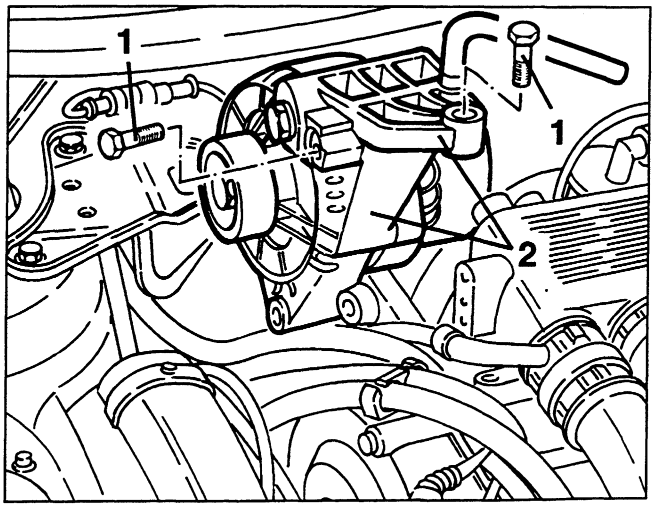

ELECTRONIC CONTROL UNITS

WARNING:
The following pages describe the procedures necessary for removing and refitting the electronic control units fitted on the vehicle with the exception of some devices inserted directly in the fusebox.

For the location of the various devices (control units, relays, etc.) and for any other functional information see "Group 55 - ELECTRIC SYSTEM DIAGNOSIS".

INJECTION CONTROL UNIT

REMOVAL/REFITTING

- Disconnect the battery
- Remove the trim.

1. Slacken the fastening nuts and disconnect the control unit from the tunnel console.
2. Disconnect the combs and remove the control unit.

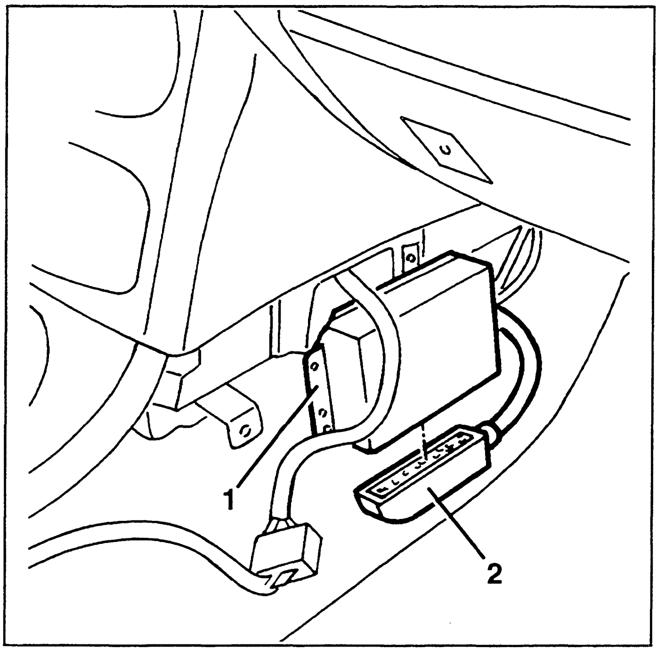

IGNITION CONTROL UNIT

REMOVAL/REFITTING

- Disconnect the battery.
- Remove the glovebox (see specific paragraph).
- Working under the dashboard, on the right-hand side panel of the passenger compartment, move aside the trim.

1. Slacken the fastening screws.
2. Detach the control unit from the side panel.
3. Disconnect the combs and remove the control unit.

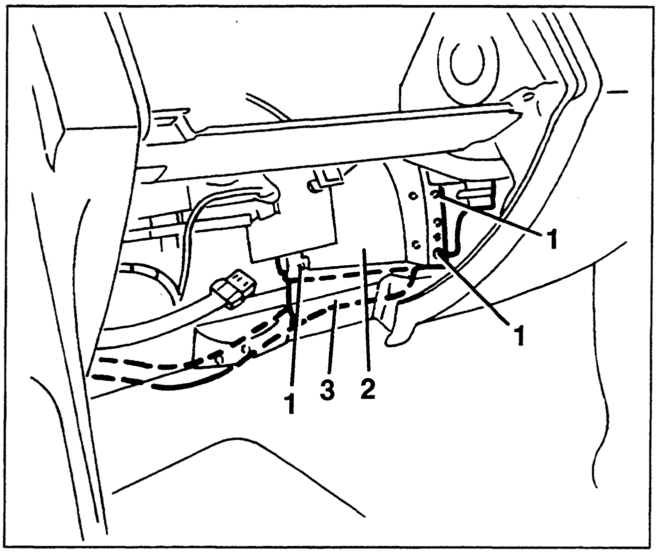

NOTE:
for all the other control units, refer to the corresponding Group 55 of "Spider - Gtv".

LOCATION OF EARTHS

INDEX

GENERAL DESCRIPTION

The following diagrams show the diferent earths present on the vehicle and the connecting cables for each of them; each cable shows the circuit to which it refers and the component earthed through that line.

The earths shown are the following:

- **G53a** Right-hand engine compartment earth (*)
- **G53b** Left-hand engine compartment earth (*)
- **G55b** Left-hand side panel earth (*)
- **G63b** Left-hand rear earth (*)
- **G92** Earth for electric aerial (*)
- **G131a/b** Earths on engine upper cover
- **G148b** Earth under left-hand dashboard (*)
- **G381** Airbag earth (*)

There is also an **earth braid**, which connects the power unit to the body.

NOTE: Using these diagrams it is easy to locate those circuits which are connected to earth by the same line: this simplifies faultfinding work in the event of problems affecting more than one system: for instance the oxidation of an earth can put several circuits and numerous functions out of order contemporaneously.

(*) See the corresponding earth in the section of "Spider-Gtv - ELECTRIC SYSTEM DIAGNOSIS".

WIRING DIAGRAMS

G131a (3.0 V6 TB engine)

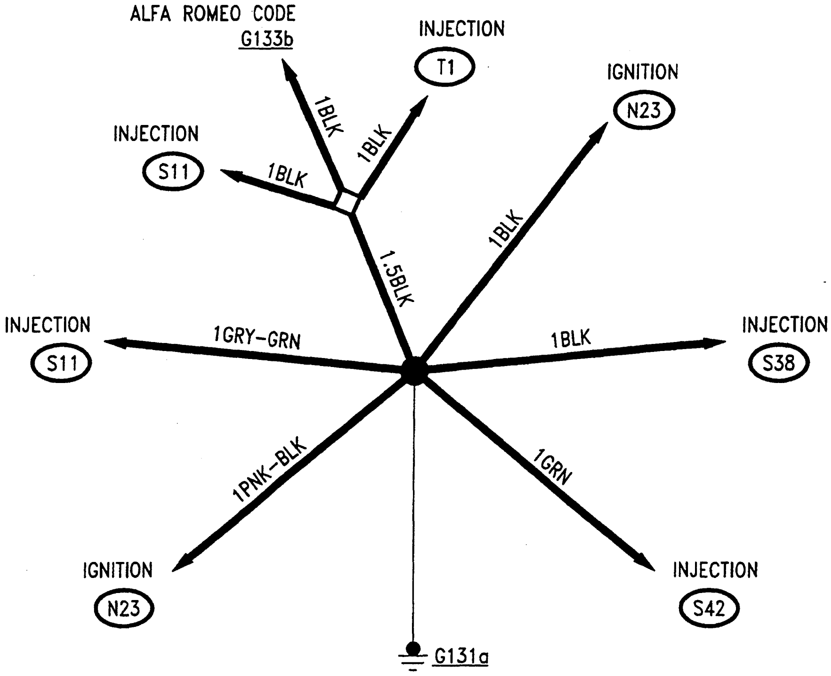

G131b (3.0 V6 TB engine)

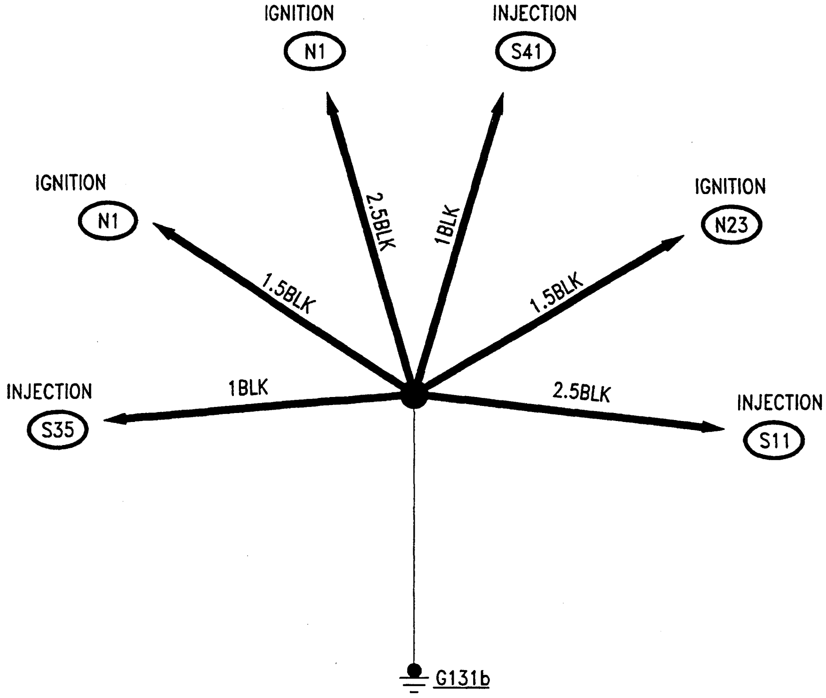

LOCATION OF EARTHS ON THE CAR

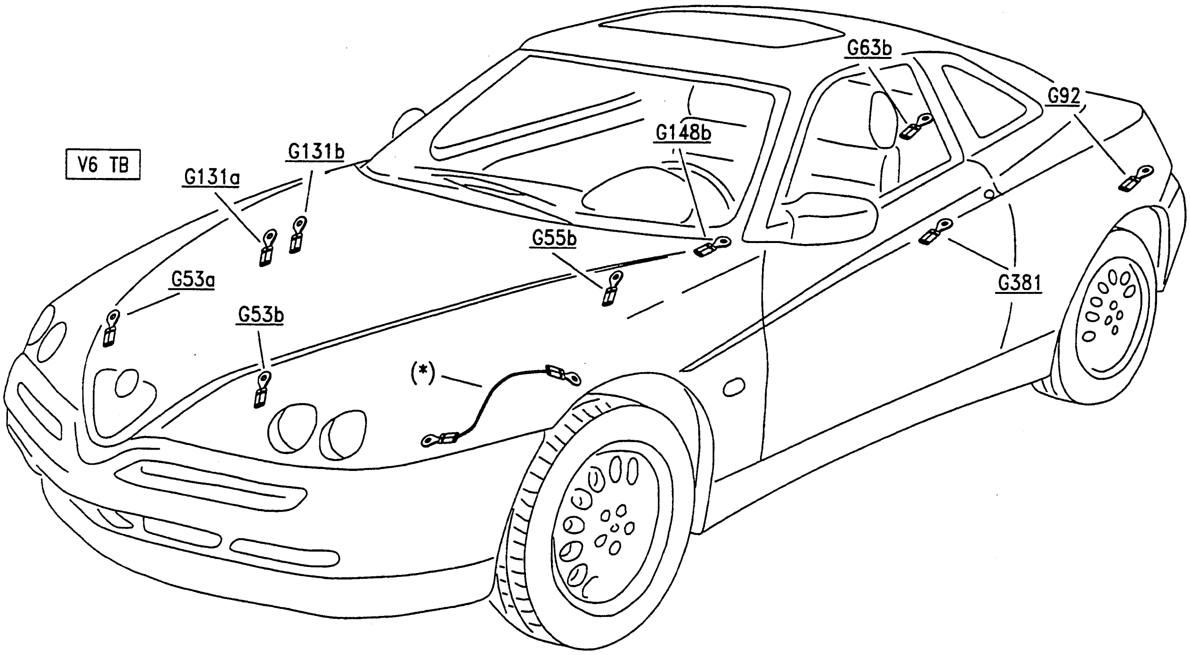

(*) earth braid between gearbox and body

FUSEBOX

INDEX

(*) See the corrresponding section of "Spider-Gtv - ELECTRIC SYSTEM DIAGNOSIS". For item involving the engine refer to the 3.0 V6 engine.

LOCATION OF FUSES AND RELAYS

This section shows the locations in the car of all the fuses and switches that are not to be found in the fusebox.

The fuses and relays are distinguished by the colour of the base (fuse holder or relay carrier) which connects them to the wiring harness, as described later.
In addition to the colour of the base, it is always wise to check the exact location of a relay or fuse by the colour of the wires that converge on it (for these - see the wiring diagram concerned).

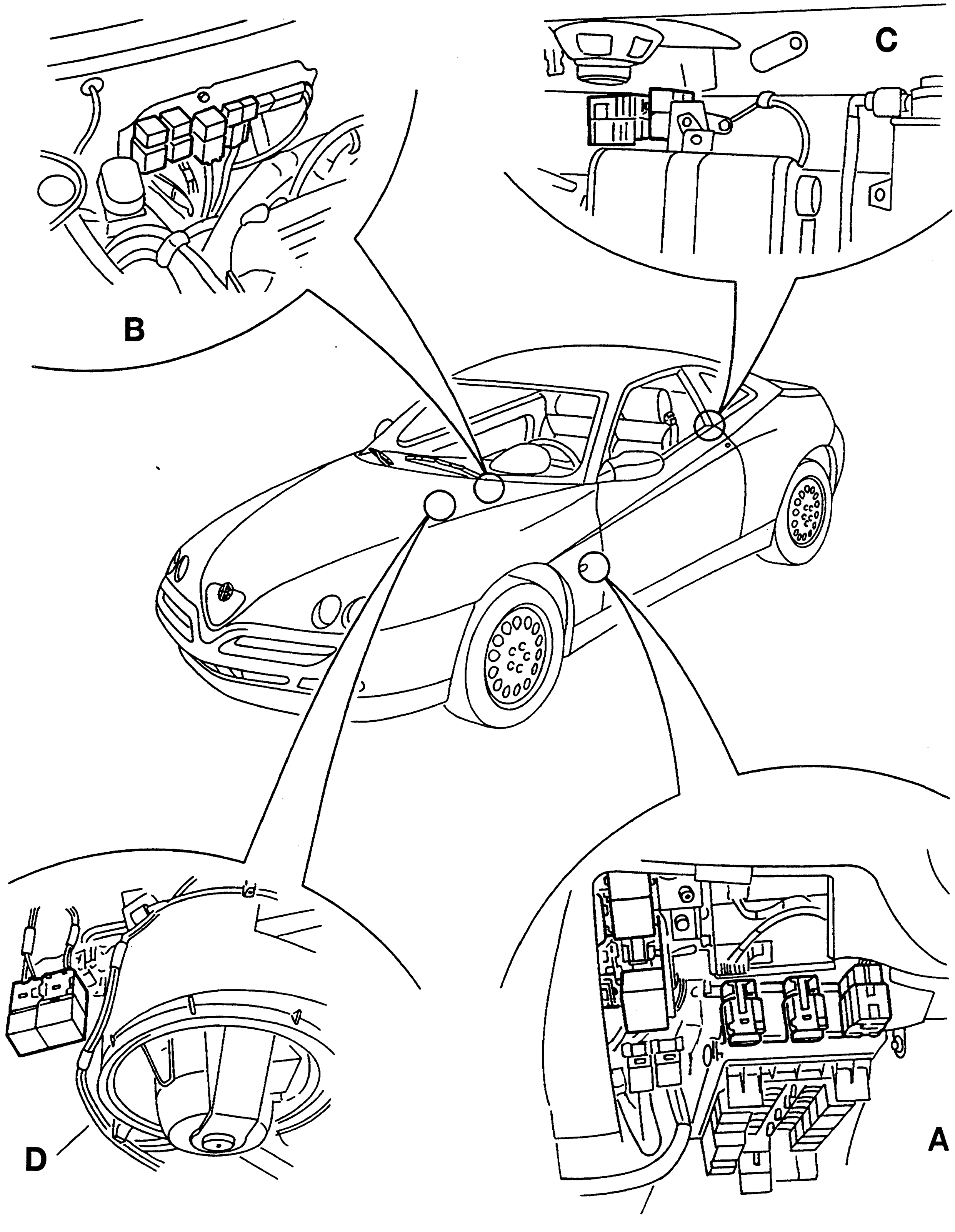

FUSES AND RELAYS ON AUXILIARY BRACKET (see fig. position A)

A set of fuses and relays is positioned on an auxiliary bracket (not removable) on the left-hand side of the main fusebox; next to this there is also the power window control unit **N38**, the electronic key control unit **N77** and the electronic windscreen wiper device **N14.**

COMPONENT	AMP.	SYMBOL	COLOUR OF BASE
Ceiling light relay	20A	**I26**	Green
Hazard warning light & direction indicator intermittent device	-	**N13**	Black
Rear fog guard device	-	**N25**	White
Engine cooling fan 1st speed relay	30A	**I99/I99a**	Yellow
Sunroof relay	30A	**I58**	Red
ABS fuse	10A	**G125a**	Black
Power window fuse	25A	**G311**	White
RH power window fuse	25A	**G310**	White
Sunroof fuse	30A	**G261**	Green
Climate control fan fuse	30A	**G255**	Green
Rear fog guard fuse	7.5A	**G391**	Brown
ALFA ROMEO CODE control unit fuse (•)	10A	**G389**	Red

(•) from chassis no.___

FUSES AND RELAYS IN ENGINE COMPARTMENT (see fig. position B)

A set of fuses and relays is located in the engine compartment on the services container wall.

COMPONENT	AMP.	SYMBOL	COLOUR OF BASE
Antitheft switch relay	20A	**I109**	Red
Engine fan fuse	50A	**G254**	Black
Air conditioner wander fuse	30A	**Q39**	Green (Black) (•)
Main relay	30A	**S41**	Grey
Secondary relay	30A	**S42**	Black
Fuel pump relay	30A	**S12a**	Black
Fuel pump fuse	15A	**S47**	Blue

(•) from chassis no.___

FUSES AND RELAYS ON REAR BRACKET (see fig. position C)

A set of fuses and relays is located in the luggage compartment on a special bracket.

COMPONENT	AMP.	SYMBOL	COLOUR OF BASE
Luggage compartment opening relay	20A	**I52**	Green
Fuel flap opening relay	20A	**I53**	White
key-operated supply cut-off relay	20A	**I108**	Blue
Services supply fuse	40A	**G384**	Black
ABS supply wander fuse	60A	**G125b**	Black
Injection wander fuse	40A	**S36**	Black

RELAYS ON HEATER/AIR DISTRIBUTOR UNIT (see fig. position D)

COMPONENT	AMP.	SYMBOL	COLOUR OF BASE
Climate control solenoid valve relay	30A	**Q15**	Yellow
Climate control solenoid valve 1st speed relay	30A	**Q69**	Brown

INDICATORS AND WARNING LIGHTS

INDEX

(*) See the corrresponding section of "Spider-Gtv - ELECTRIC SYSTEM DIAGNOSIS". For item involving the engine refer to the 3.0 V6 engine.

MAIN INSTRUMENT CLUSTER: INDICATORS AND WARNING LIGHTS

The main cluster **C10** contains a number of indicators and warning lights.

The **rev counter signal** is supplied to the instrument cluster **C10** by the engine injection/ignition control unit **S11** which processes an "rpm" signal thanks to sensor **S31**.
The signal reaches the cluster **C10** at pin 14 of connector B, leading from connector **G133a** which connects the injection/ignition system with the other circuits; inside the cluster it then reaches the electronic device that operates the rev counter.

The **speedometer signal** is supplied by the speedometer sensor **L17**: this is fitted on the gearbox and detects the speed of the car at all times.
This device is a pulse generator which generates and processes a signal that is proportionate with the speed of the camshaft at the gearbox output, therefore with that of the wheels: it is a "square-wave" signal with 16 pulses per turn generated by a Hall-effect sensor.
The sensor **L17** is supplied at pin 3 with stabilised voltage through an electronic device inside the instrument cluster (from pin 3 of connector B of **C10**); pin 1 is connected to earth **G53b**, while the tachometric signal (proportionate with the speed of the car leaves pin 2 and is sent to the instrument cluster **C10**, pin 7 of connector B, and from here to the electronic device that operates the speedometer and the two mileage recorders (total and trip).

The same signal is also sent to the injection/ignition system which needs the "car speed".

Switch **B40** km makes it possible to **reset the trip meter** sending an earth pulse to the electronic device inside **C10**, pin 5 of connector A.

N.B. The seat belts warning light is NOT connected to the seat belt buckle: it does not turn on to indicate that the belt has not been fastened, but is turned on by a command from the electronic device of C10 for six seconds when the engine is started under all circumstances (seat belt fastened or not, engine running or not), and then goes off.

Two warning lights alert the driver in the event of problems on the **braking system.**

The two brake pad switches **H9** right and **H10** left are formed of a microswitch on the pad that closes to earth when the thickness of the pad thins, sending a signal to the instrument cluster **C10** at pin 16 of connector B, thereby turning on the "**brake pad wear**" warning light.

The handbrake switch **H1** closes when the handbrake lever is pulled and supplies a signal to the instrument cluster **C10**, at pin 9 of connector A, turning on the "**handbrake engaged**" warning light.

The same warning light is also turned on to indicate "**low brake fluid level**" through switch **H17** located in the fluid reservoir: this is a float device which closes a contact when the level of the fluid in the brake fluid reservoir falls below a certain reference.

The minimum oil pressure contact **L2**, fitted on the crankcase, closes when the pressure falls below a certain limit sending an earth signal to the cluster **C10** at pin 10 of connector B and thereby turning on the **"minimum oil pressure"** warning light.

Wiring diagram

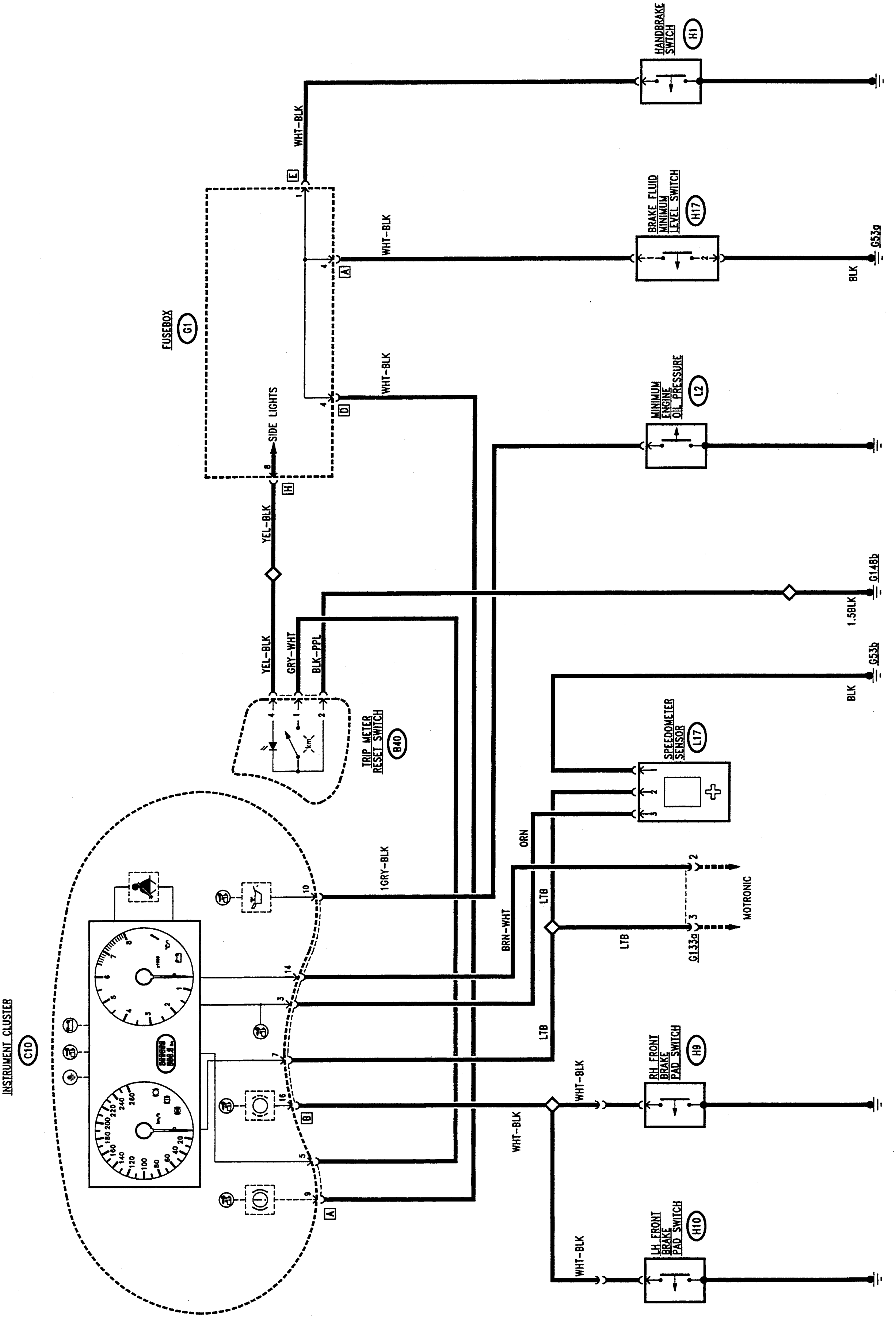

LOCATION OF COMPONENTS

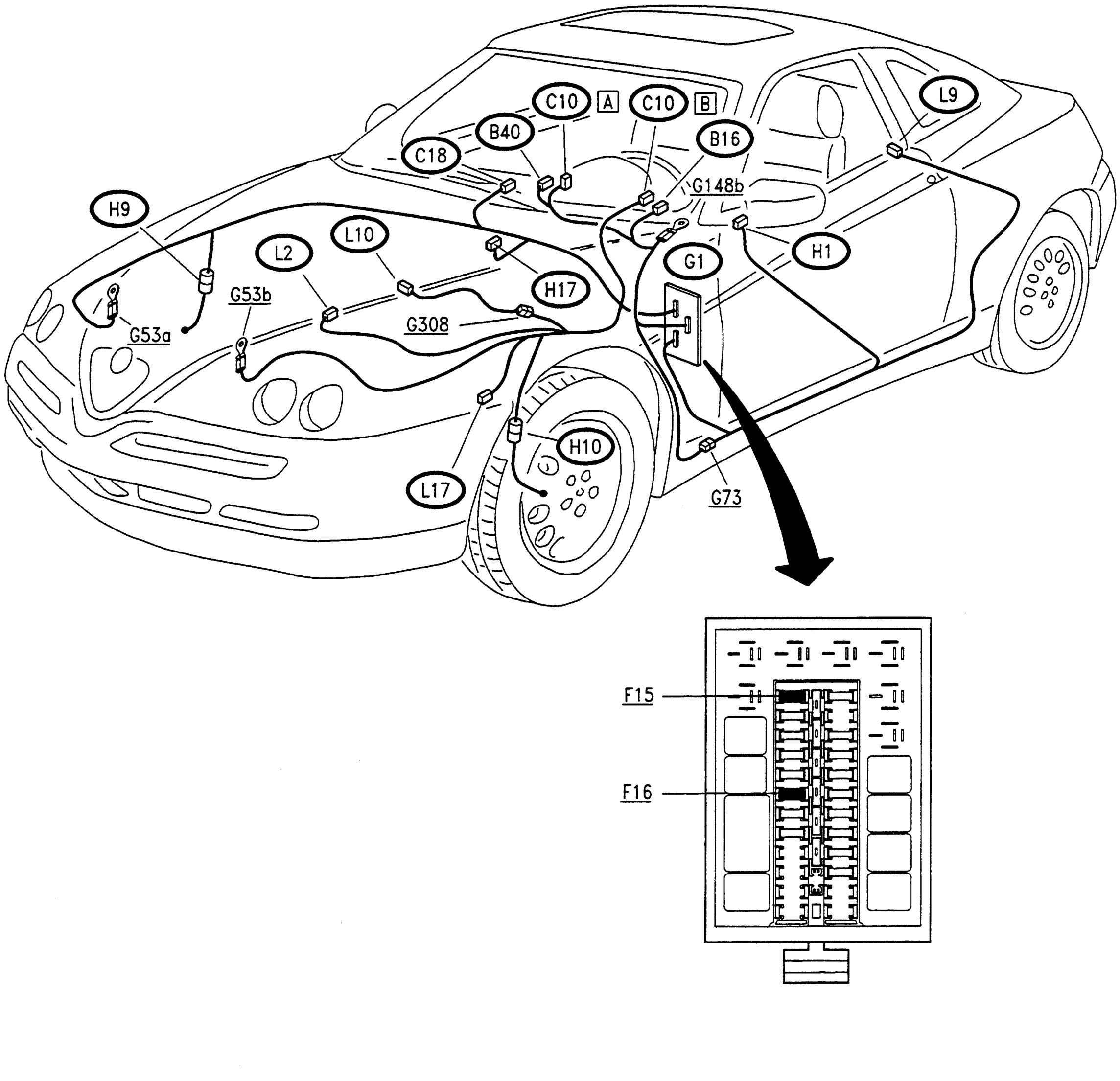

CHECKING COMPONENTS

Sender for engine coolant temperature gauge and warning light contact max. temperature (L10)

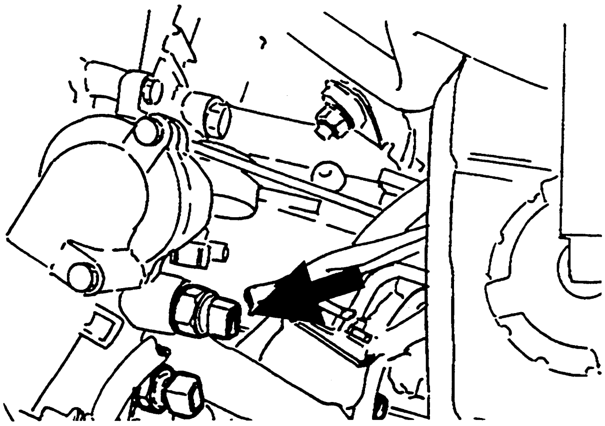

SPECIFICATIONS		
Sender		
Temperature °C	Resistance Ω	Type of fluid for check
60	525 ÷ 605	Water
90	195 ÷ 245	Water
120	82 ÷ 94	Glicerine
Contact		
Contact closes	115 ± 3°C	
Contact opens	≥ 102°C	

Min. engine oil pressure contact (L2)

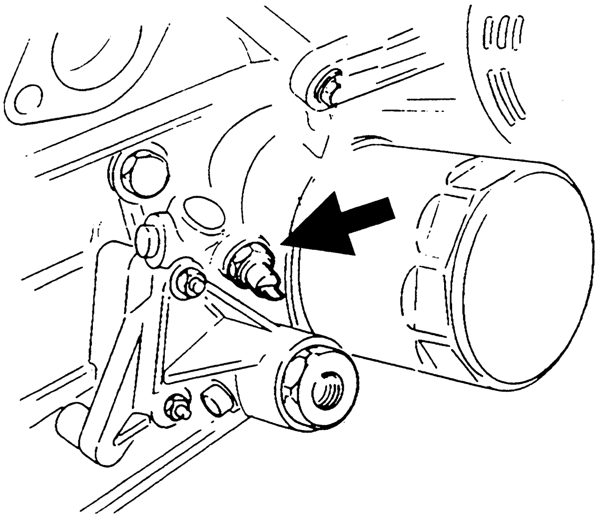

SPECIFICATIONS	
Conntact closes (pressure falliing)	0.15÷0.35 bar
Contact opens (pressure rising)	0.15÷0.35 bar

HEATING AND VENTILATION:

INDEX

(*) See the corrresponding section of "Spider-Gtv - ELECTRIC SYSTEM DIAGNOSIS". For item involving the engine refer to the 3.0 V6 engine.

COMPRESSOR CONNECTION

The electromagnetic joint which operates the compressor **Q11** is controlled by relays **Q22 and Q32**, to be found in the set of relays and fuses **Q41**.

Relays **Q22** and **Q32**, have the coil supplied from the ignition switch (line protected by fuse **F17** of **G1**); their power line is supplied by battery voltage through fuse **Q65** (7.5A), also located in group **Q41.**

Relay **Q22** is energized and consequently supplies 12V to the electromagnetic joint **Q11**, by an earth signal leading from relay **Q69**, which is in turn energized with a positive signal leading from the compressor operating switch **Q68**; this signal crosses the control knob **Q4** which interrupts it when the knob itself is in the "OFF" position: in fact, in this condition, the compressor cannot be turned on. It should be remembered that the same signal controls the first speed of the fan contemporaneously ("Fan and Recirculation Control").

This signal also crosses the minimum and maximum pressure switch (trinary) **Q20** which comes into operation if the pressures in the cooling system are too high or too low: in this case the signal is cut off and the compressor is not engaged.

The "compressor cut-in" signal from pin 87 of **Q22** to **Q11** is also sent to the Motronic control unit **S11** pin 29.

The other relay **Q32** is energized by the control signal leading from relay **Q69** and sends a "compressor cut-in request" signal to the Motronic control unit **S11** - pin 32 - which adjusts the engine speed accordingly.

Wiring diagram

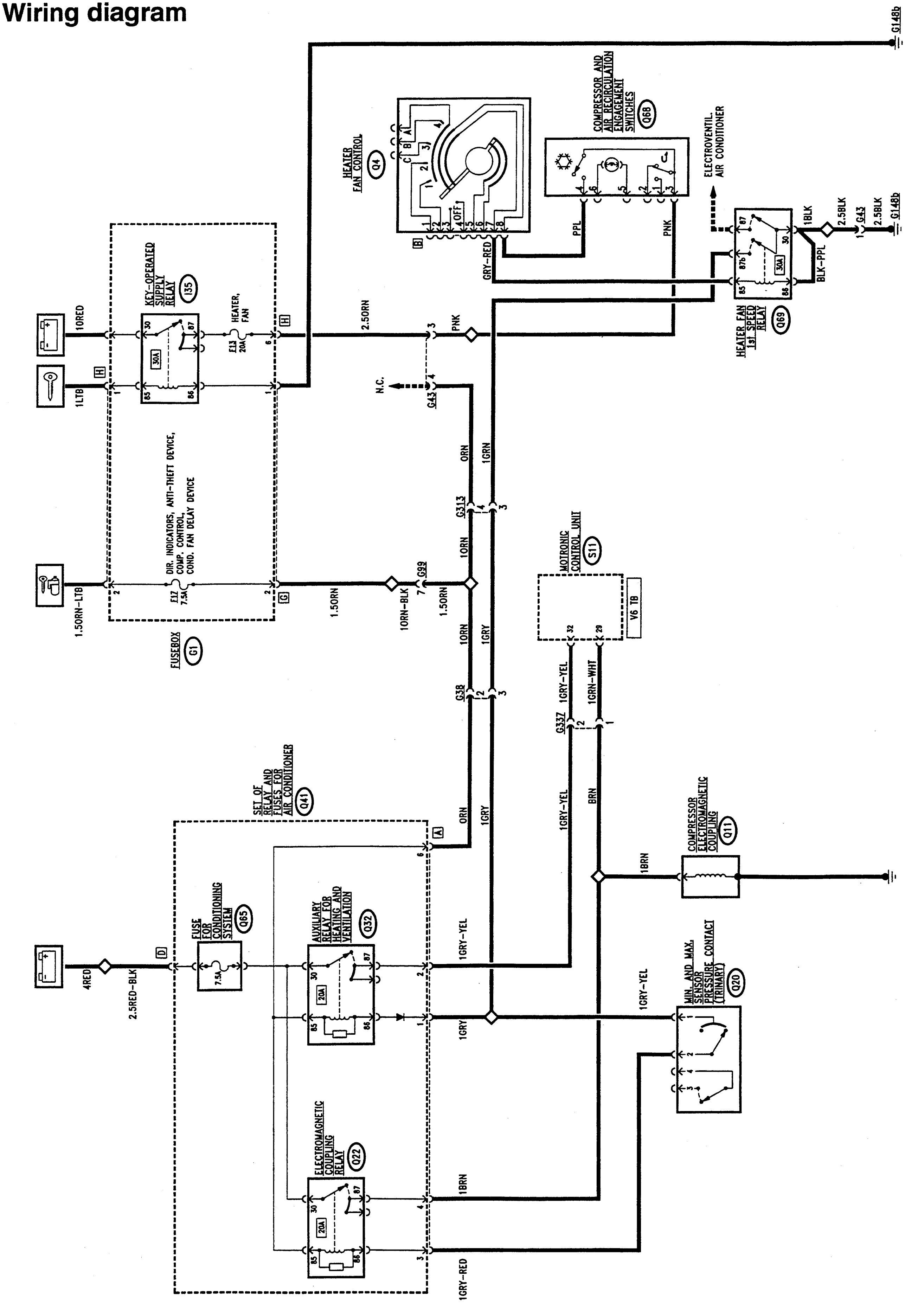

ALFA ROMEO CODE

INDEX

(*) See the corresponding section of "Spider - Gtv - ELECTRIC SYSTEM DIAGNOSIS". For item involving the engine refer to the 3.0 V6 engine.

WIRING DIAGRAM

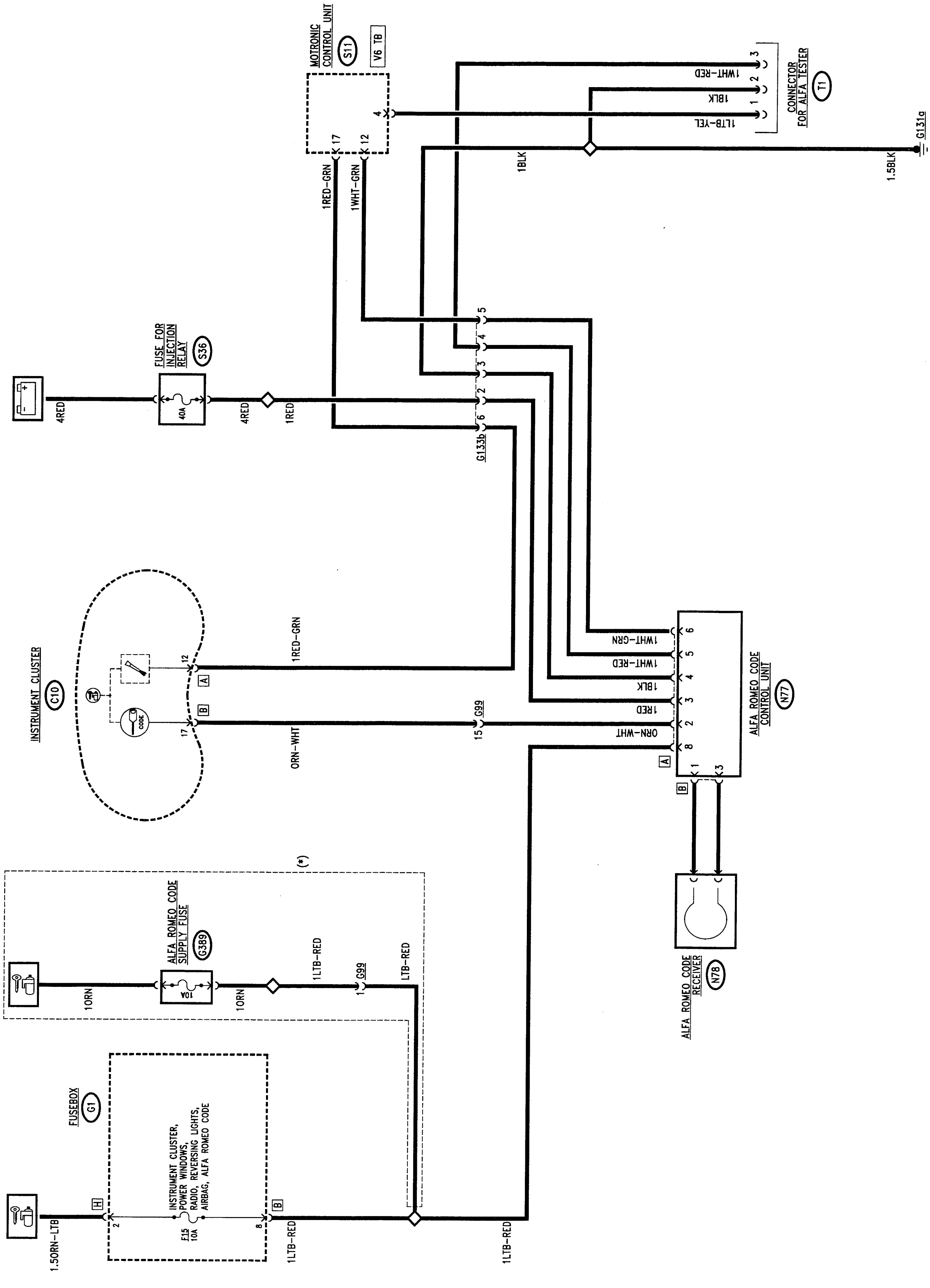

(*) from chassis no.___

FUNCTIONAL DESCRIPTION

The ALFA ROMEO CODE control unit **N77**, to be found next to the fusebox **G1,** is connected via connector B to a special pair of cables to the receiver **N78**, consisting in a coaxial aerial with the ignition switch. Through connector A it is connected to the Motronic control unit **S11** and to the other systems: at pin 8 it receives the "key- operated" supply via the line of fuse **F15** of **G1** - up to chassis no.___ - and from wander fuse **G389** - from chassis no.___ - while at pin 3 it receives the direct supply via fuse **S36** of the Motronic system, and pin 4 is connected to earth.
The connection line with the ALFA ROMEO CODE warning light on the instrument panel leaves from pin 2.

Pins 5 and 6 manage communication between the ALFA ROMEO CODE control unit **N77** and the Motronic control unit **S11**: this communication takes place "cutting off" the diagnosis line K which leads from **S11** to the diagnosis connector **T1**.

CONTROL SYSTEM -
V6 TB Engine:
MOTRONIC ML4.1 / EX212K

INDEX

WIRING DIAGRAM A

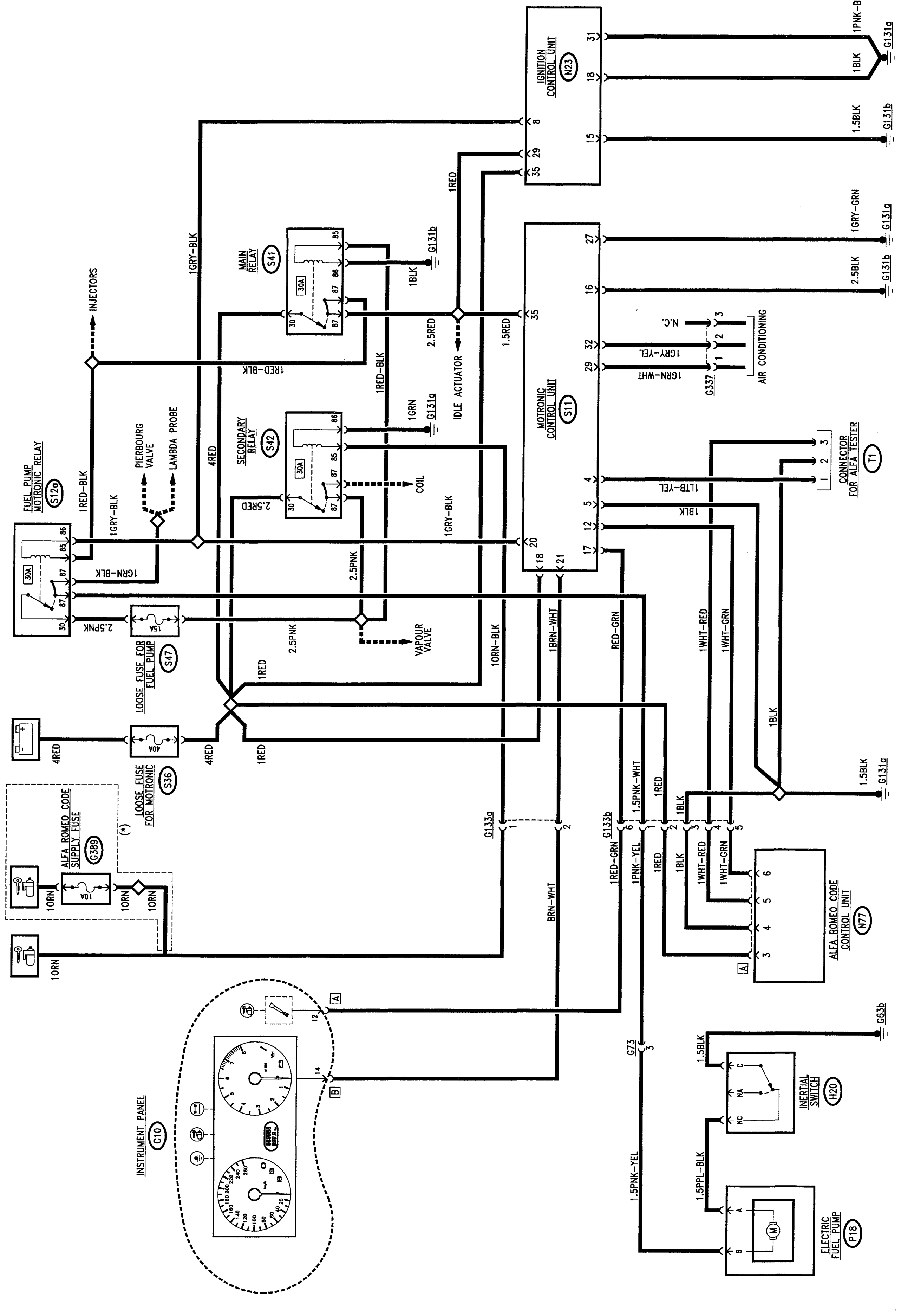

(*) from chassis no.___

WIRING DIAGRAM B

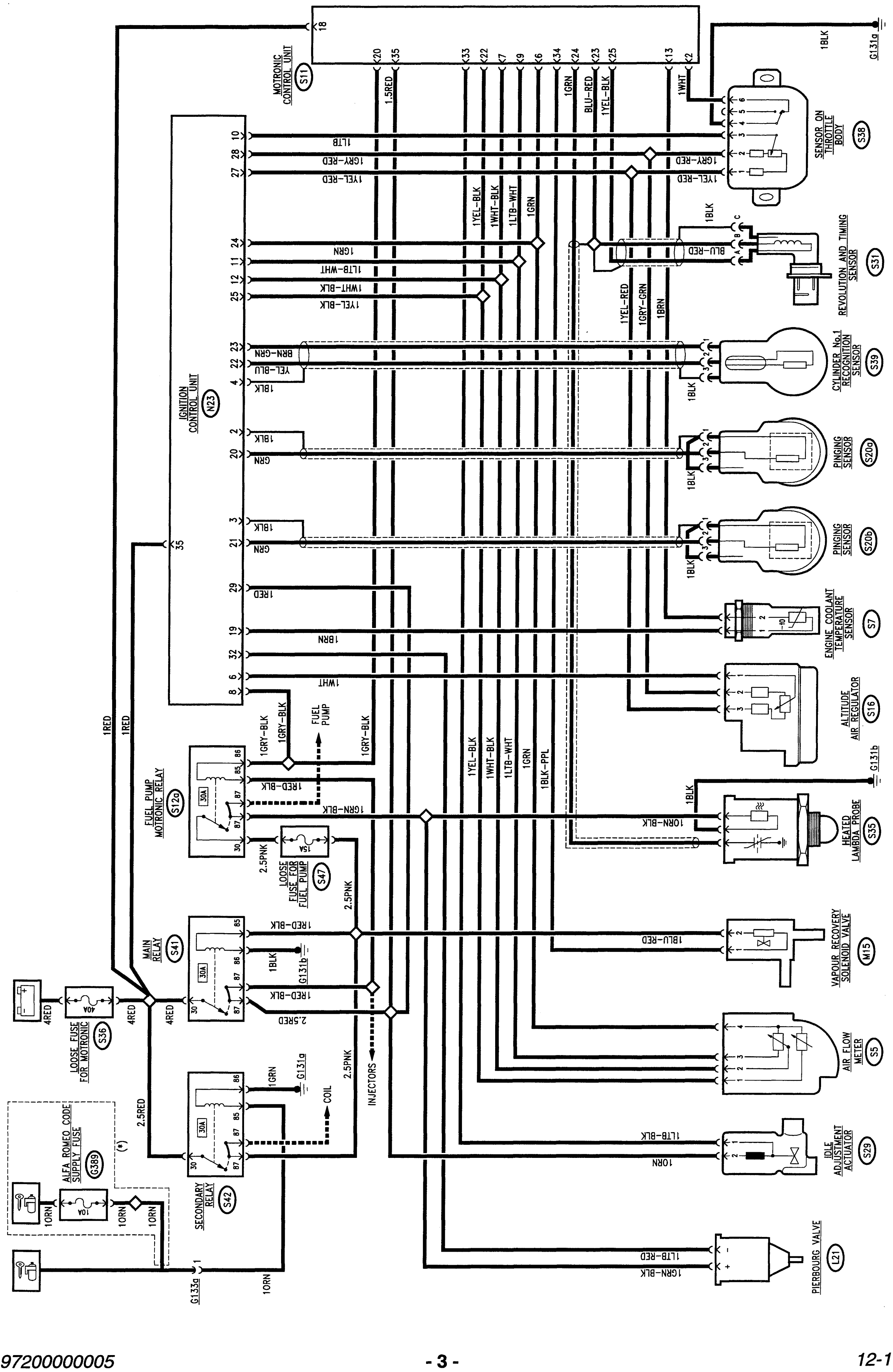

(*) from chassis no.___

WIRING DIAGRAM C

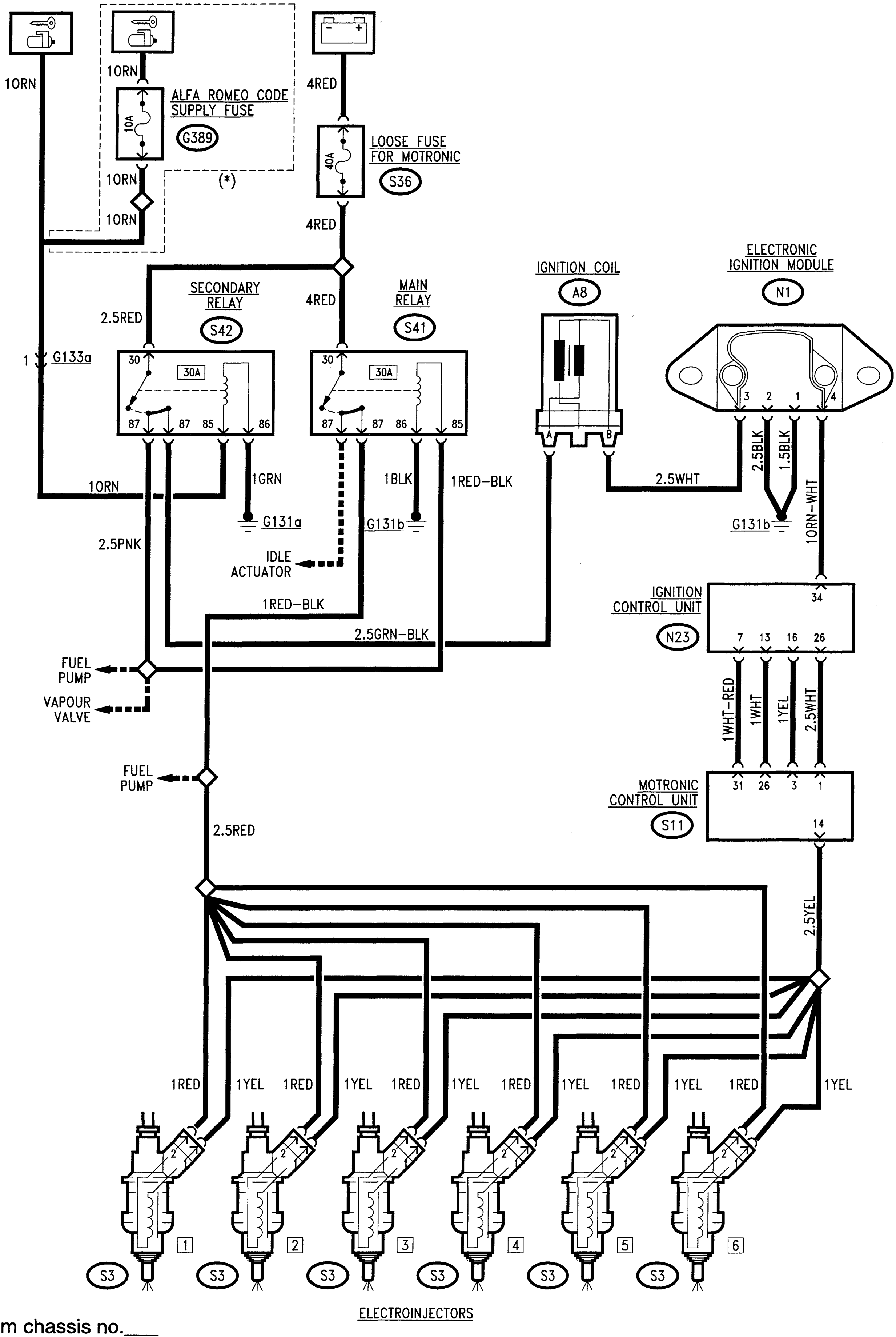

(*) from chassis no.___

GENERAL DESCRIPTION

In this system the ignition and injection functions are operated by two control units, the Motronic ML4.1 and EZ212K both made by BOSCH. The experience acquired and the continuous research developed in this sector have made it possible to bring forward an up-dated, fine-tuned system, simplifying and reducing as far as possible the data detection sensors and making the control actuators more precise and powerful. In order to optimise the performance of the vehicle during acceleration and at top speeds, in the EZ212K control unit, a new OVERBOOST function control has been implemented which makes it possible to increase the supercharging pressure according to a certain logic, while the ML4.1 control unit determines the necessary fuel enrichment.

SYSTEM FUNCTIONS

The system functions are essentially the following:

- injection times adjustment;
- spark advance adjustment;
- cold starting control;
- control of enrichment during acceleration;
- fuel cut-off during deceleration;
- constant idle speed control;
- maximum rpm limiting;
- evaporative solenoid valve control;
- lambda probe control;
- CONNECTION WITH THE alfa romeo code system.
- self-diagnosis.

Injection times adjustment

Digital technology has made it possible to optimise consumption and performance levels through programmed maps memorised inside the electronic control unit, in relation to engine rpm and load.

With the help of sensors which detect the many variables involved, the ML4.1 control unit controls the electroinjectors extremely quickly and accurately.

The injection time is mainly corrected on the basis of the battery voltage and engine temperature.

Spark advance adjustment

The gap on the phonic wheel due to the lack of two teeth gives the ML4.1 control unit a reference; each side of the subsequent tooth determines the angular position of the crankshaft. This reference is sent to the ML4.1 control unit, which, according to a map programmed inside the control unit itself and in relation to the engine rpm and load, establishes the correct advance rate. The advance determined in this way is transferred to the EZ212K control unit which, on the basis of the signals received from the pinging, temperature and throttle angle sensors, delays the advance if necessary, selectively on the cylinder that needs it.

Control of cold starting

During cold starting, the system controls the spark advance and the injection time. The spark advance depends solely on engine rpm and temperature and the advance rate is at its highest at a temperature of -30°C. The injection time is obtained from a value programmed in the ML4.1 control unit and corrected through the measurement of the intake air temperature, engine temperature, battery voltage and engine rpm. During starting, the control unit provides injection at each ignition pulse, therefore in four phases per engine cycle. Once a pre-established rpm (depending on the engine temperature) has been reached, the control unit operates injection at each turn of the crankshaft.

Control of enrichment during acceleration

Each time acceleration is required if the change in the signal of the air-flow meter exceeds a predetermined increase, the ML4.1 control unit not only adapts injection to the new requirement, but increases it further in order to quickly reach the rpm required. When nearing the established rpm, the increase of injection is gradually eliminated.

Fuel cut-off during deceleration

Fuel cut-off during deceleration is of the adapted type. With the detection of the throttle closed condition and engine speeds above 1080, fuel injection is de-activated. As the supply is lacking, the engine rpm will fall more or less rapidly according to the conditions of the vehicle. Before reaching idle speed, the dynamics of the lowering of the rpm is monitored. If this is above a certain value, the fuel supply is partially re-activated according to a logic which involves smoothly accompanying the engine to idle speed. Once this condition has been reached, the normal idle speed functions are reactivated and fuel cut-off will only be reactivated after exceeding the fuel cut-off threshold to prevent the engine from "gasping" The thresholds for resuming the fuel supply and cut off vary depending on the temperature of the engine. Another fuel cut off logic is developed inside the ML4.1 control unit which comes into operation during partial deceleration, i.e. when a lower engine load is required. This function is active only if the new condition lasts for a pre- established length of time and after adapting the ignition angle to the new situation.

Constant idle control

The adjustment of idle speed is controlled under all operating conditions by the constant idle speed actuator with single coil. When the engine is running at idle speed, the purpose of the actuator is to bring the real rpm to the nominal rpm rating acting on the throttle by-pass. In addition to controlling the idle speed, it also acts as an additional air valve and regulator for the cutting in of the air conditioner compressor. In addition to the constant idle speed actuator, idle rpm is also corrected by the adjustment of the spark angle (advance) as this has a more rapid effect.

Maximum rpm limiting

After exceeding a maximum rpm threshold (6,500 rpm) the injection of fuel is cut off to prevent the engine from over-loading.

Adaptation of idle speed with air conditioning system.

When the conditioner is turned on, the compressor absorbs power from the engine, which at idle speed would tend to stop. To avoid this drawback, 12V is supplied to pins 29 and 32 of the ML4.1 control unit which will adapt the idle speed to the new requirement for power, operating the corresponding actuator.

Evaporative solenoid valve control

The fuel vapours gathered by the various points of the circuit in a special active carbon canister are sent to the engine where they are burnt: this takes place through a solenoid valve wich is opened by the control unit only when the engine is in a condition to allow correct combustion without "disturbing" it: in fact, the control unit compensates this amount of incoming fuel by reducing delivery to the injectors.

Lambda probe control

The oxygen sensor (or "lambda" probe) informs the control unit of the amount of oxygen present at the exhaust, therefore of the correct fuel-air metering.

The optimum mixture is obtained when the lambda coefficient = 1 (optimum stoichiometric ratio).
The electric signal that the probe sends to the control unit changes abruptly when the mixture composition departs from lambda = 1. When the mixture is "lean" the control unit increases the amount of fuel and reduces it when the mixture is "fat": this way the engine always operates as far as possible around the ideal lambda rating.
The lambda probe signal is processed inside the control unit by a special integrator which prevents sharp "oscillations".
The probe is heated by an electrical resistance so that it quickly reaches the correct operating temperature (appr. 300°C)
Therefore through this probe it is possible to adjust engine carburetion accurately, thereby keeping exhaust emission within the specified limits.

Connection with the ALFA ROME CODE system

On vehicles fitted with ALFA ROMEO CODE, as soon as the Motronic control unit receives the signal that the "key is at MARCIA", it "asks" the ALFA ROMEO CODE system for consent to start the engine: this consent is only given if the ALFA ROMEO CODE control unit recognises the code of the key engaged in the ignition as correct. This dialogue between the two control units takes place on diagnosis line K already used for the Alfa Romeo Tester.

Self-diagnosis

The Motronic ML4.1 and EZ212K control units are fitted with a self-diagnosis system. In the event of a system malfunction, the control units detect the fault and, where possible, they replace the missing signals with fixed parameters. However, only the Motronic ML4.1 control unit is capable of memorising and maintaining the data also when the engine is turned off. Therefore, also the errors of the EZ212K control unit are stored in the ML4.1 control unit, via the serial line which connects them. When required by the operator, the faults can be read on the Motronic ML4.1 control unit using the Alfa Romeo Tester.

FUNCTIONAL DESCRIPTION

The engine is supplied with a Motronic ML4.1 injection and ignition system controlled by control unit **S11**. The control unit **S11** contains a memorised programme which manages the injection time and the firing of the spark plugs in relation to the engine rpm and load, the intake air temperature and the temperature of the engine. The ignition signal and the spark advance supplied by the ML4.1 control unit is optimised for each cylinder by another control unit EZ212K (**N23**) on the basis of the signals received from the pinging, engine temperature and throttle angle sensors.

All the system supplies are protected by fuse **S36** (40A), - from chassis no.___ - from fuse **G389** (10A).

The control unit **S11** is supplied at pin 18 directly from the battery via fuse **S36**. At pin 35 it receives the "key-operated" supply from the main relay **S41**.

Pins 5, 16 and 27 are earthed.

Control unit **N23** is supplied at pin 35 directly from the battery via fuse **S36**. At pin 29 it receives the "key-operated" supply from the main relay **S41**.

Pins 15, 18 and 31 are earthed.

The control unit **S11** activates the electric fuel pump through relay **S12a**: this relay is energized when pin 20 of the control unit is connected to earth; the relay supply line is protected by a special fuse **S47** (15A).

In addition, the earth to the pump **P18** passes through the inertial switch **H20** which cuts off the circuit in the event of a crash.

The control unit **S11** calculates and controls the opening time of the electroinjectors **S3** (pin 14) on the basis of the internal programme and the information received from the different sensors.

The engine speed is supplied at pin 23 and 25 of the control unit **S11** from the rpm and timing sensor **S31**: this sensor is inductive and detects the changes in the magnetic field caused by the teeth (suitably positioned) of a phonic wheel integral with the crankshaft.

The sensor on the throttle body with potentiometer **S38** makes it possible to inform the injection control unit **S11** (pin 2) on the idle speed condition (from 0 to 1 degree of throttle opening); it also informs the ignition control unit **N23** on the throttle position angle operated by the accelerator (slider of potentiometer of **S38** connected to pin 10 of **N23**).

This parameter is used to change the spark advance.

The engine coolant temperature sensor **S7** is an NTC (Negative Temperature Coefficient) resistance which supplies control unit **S11** (pin 13) and control unit **N23** (pin 19) information about the engine temperature.

The air-flow meter **S5** measures the flow rate of the air admitted to the engine and supplies control unit **S11** (pin 7) and control unit **N23** (pin 12) a signal which enables correct metering of the fuel. The signal is generated by a potentiometer which transmits a voltage to the control units corresponding to the angle of a mobile port.

The air temperature sensor (NTC) located inside the air-flow meter **S5** measures the intake air temperature (pin 22 of **S11** and pin 25 of **N23**).

The electroinjectors **S3** are operated in parallel by the control unit **S11** via pin 14 from relay **S41** on the basis of all the parameters received from control unit **S11**.

When the throttle is closed or only slightly open, control unit **S11** (pin 33) commands a flow of air through the constant idle speed actuator **S29** which acts as a throttle body by-pass line. The constant idle speed actuator S29 is controlled by a part of the programme of control unit **S11** and it is used to maintain idle speed at a constant rate under all operating conditions of the engine.

The ignition control system is integrated in control unit **S11** and makes it possible to adjust the spark through a memorised programme.

The command signal is sent from pin 1 of **S11** to control unit **N23** (pin 26). Control unit **N23** allows adjustment of the spark advance optimising the yield of each cylinder through information on the magnitude of vibrations of the actual cylinder leading from the two pinging sensors **S20a** and **S20b** (pin 20 and 21). The recognition of the cylinder in question is obtained through the magnetic sensor **S39** (pin 22 and 23) fitted on the exhaust camshaft. Account is also taken of the altitude at which the engine is operating via sensor **S16** (pin 6).

The output of the control unit **N23** (pin 34) is sent to a power module **N1** and from this (pin 3) to the ignition coil **A8**.

The evaporative valve **M15**, supplied at +12V, is opened by control unit **S11** only when the ignition key is at MARCIA and the engine is under load; conversely, it is closed when the engine is cold or running at idle speed (command from pin 34).

The pre-heated lambda probe **S35**, placed in contact with the exhaust gas, generates an electric signal, the rating of which depends on the concentration of residual oxygen in the actual exhaust gas. This signal is characterised by an abrupt change when the air-fuel mixture is less than perfect. When the voltage of the signal of the probe **S35** is low, the control unit detects that the mixture is lean and slightly increases the fuel injected. When the voltage of the signal at pin 24 of **S11** is high, the control unit detects that the mixture is rich and slightly reduces the fuel injected. The heated lambda probe **S35** is heated by a resistance supplied by relay **S12a** only when the ignition key is in the MARCIA position.

When the air conditioning system is activated a 12V current is applied at pin 29 and 32 of control unit **S11**. Control unit **S11** then adjusts the engine idle speed taking account of the new need for power due to the cutting in of the air conditioner.

In the case of a heavy need for power, the injection control unit **S11** makes it possible to modulate the opening of the wastegate valve through a Pierburg valve **L21**.

From pin 21 the control unit **S11** sends a "pulse" signal proportionate with the engine rpm to the instrument cluster **C10**; the signal for the diagnosis "Check Engine" warning light on the instrument cluster **C10** leads from pin 17.

Control unit **S11** is connected by pin 12 with the ALFA ROMEO CODE control unit **N77** through diagnosis line K; this way if the ALFA ROMEO CODE does not detect a correct "key code" it will not give consent to the Motronic control unit which will not start the engine.

Control unit **S11** possesses a self-diagnosis system which can be used connecting with the ALFA ROMEO Tester at connector **T1**; it receives the fault signals of the control unit through diagnosis lines L - pin 4 and K - pin 12 (line K is also used by the ALFA ROMEO CODE system).

MOTRONIC ML4.1 ELECTRONIC CONTROL UNIT S11

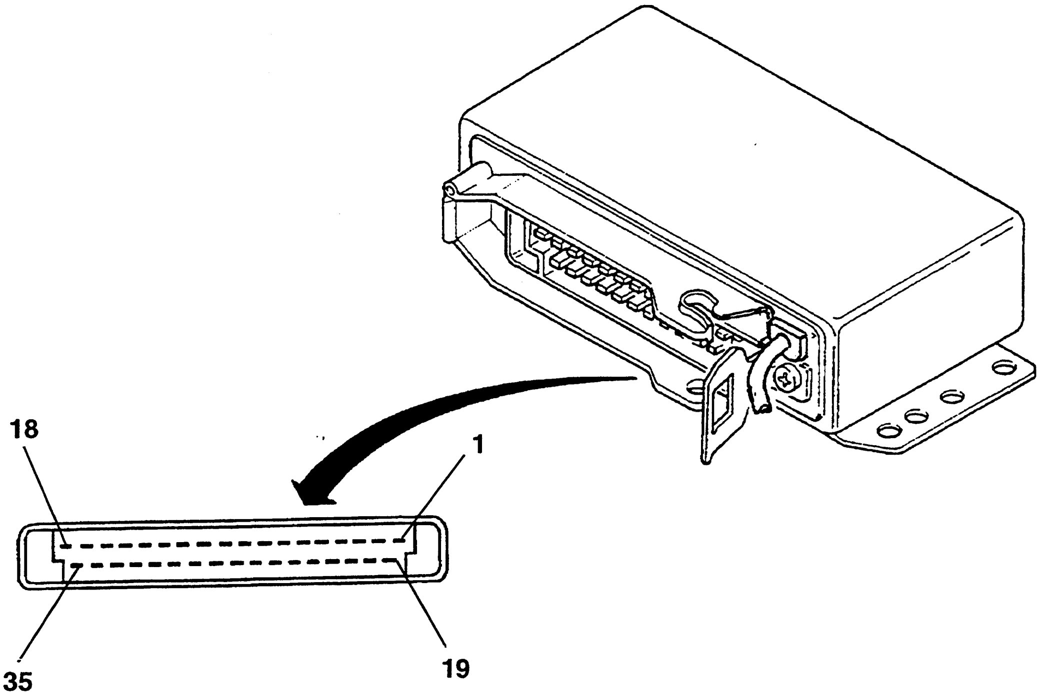

CONTROL UNIT PIN-OUTS

1. to pin 26 of N23
2. switch on throttle body
3. to pin 16 of N23
4. diagnosis line L
5. earth
6. air-flow meter
7. air-flow meter
8. N.C.
9. air-flow meter
10. N.C.
11. N.C.
12. diagnosis line K- ALFA ROMEO CODE
13. water temperature sensor
14. electroinjectors
15. N.C.
16. earth
17. "Check Engine" warning light
18. supply from battery
19. N.C.
20. fuel pump command
21. rpm signal
22. air temperature sensor
23. rpm and timing sensor
24. lambda probe
25. rpm and timing sensor
26. to pin 23 of N23
27. earth
28. N.C.
29. climate control command
30. N.C.
31. to pin 7 of N23
32. climate control command
33. idle speed actuator
34. evaporative solenoid valve
35. key-operated supply

ELECTRONIC IGNITION CONTROL UNIT EZ2121K (N23)

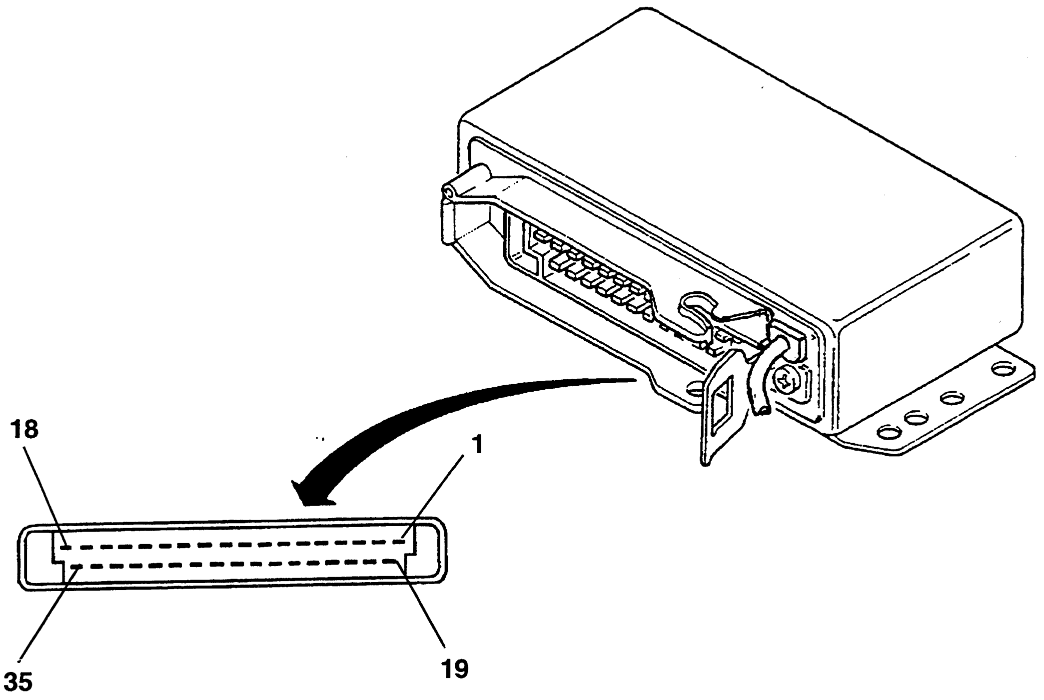

CONTROL UNIT PIN-OUTS

1. N.C.
2. pinging sensor no. 1
3. pinging sensor no. 2
4. cyl.no. 1 detection sensor
5. N.C.
6. altitude sensor
7. to pin 31 of **S11**
8. fuel pump relay
9. N.C.
10. throttle potentiometer
11. air-flow meter
12. air-flow meter
13. to pin 26 of **S11**
14. N.C.
15. earth
16. to pin 3 of **S11**
17. N.C.
18. earth
19. water temperature sensor
20. pinging sensor no. 1
21. pinging sensor no. 2
22. cyl. no. 1 detection sensor
23. cyl. 1 detection sensor
24. air-flow meter
25. air temperature sensor
26. to pin 1 of **S11**
27. throttle potentiometer
28. throttle potentiometer
29. key-operated supply
30. N.C.
31. earth
32. Pierburg valve
33. N.C.
34. ignition module
35. battery supply

LOCATION OF COMPONENTS

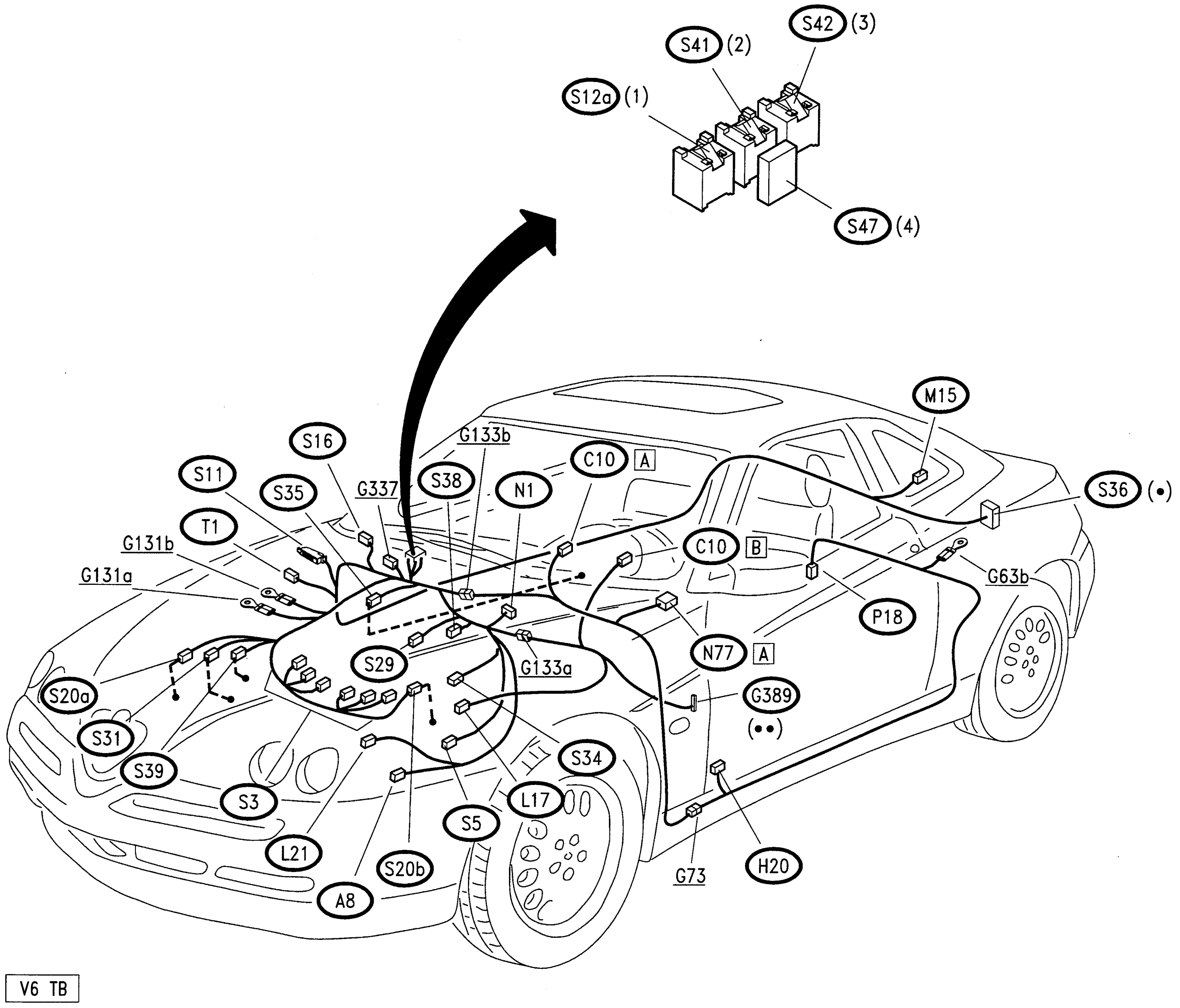

(•) Black Fuseholder
(••) Red Fuseholder
(1) Black Base
(2) Grey Base
(3) Black Base
(4) Blue Fuseholder

CHECKING COMPONENTS

Rpm and timing sensor (S31)

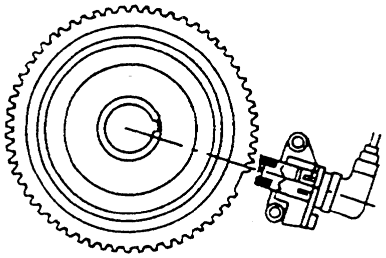

SPECIFICATIONS	
Sensor winding resistance at 20°C	~ 540 Ω
Distance (gap) between sensor and phonic wheel	0.5 ÷ 1.5 mm

Engine temperature sensor (S7)

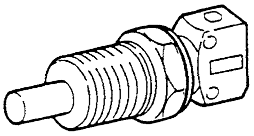

SPECIFICATIONS	
Temperature (°C)	Resistance (Ω)
- 10°C	8100 ÷ 10770 Ω
+ 20°C	2280 ÷ 2720 Ω
+ 80°C	292 ÷ 362 Ω

Air flow meter (S5)

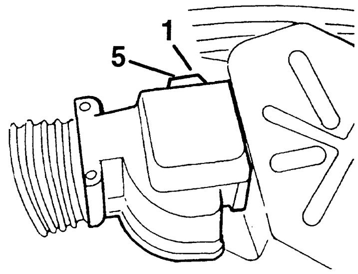

SPECIFICATIONS	
Voltage between Pin 2 e 4:	
with port shut (without air flow)	100 ÷ 300 mV
manually operating the port the voltage gradually increases up	to 4.5V

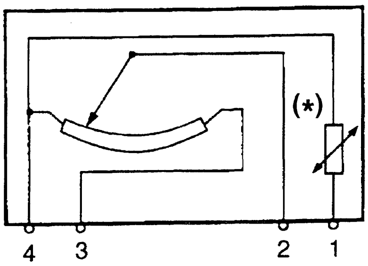

pin 1 - air temperature signal
pin 2 - air flow rate signal
pin 3 - 5V supply
pin 4 - reference earth

NOTE: The air temperature sensor (*) is incorporated in the air-flow meter

Throttle position sensor S38

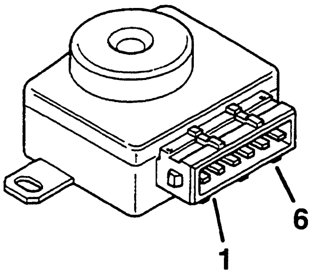

SPECIFICATIONS
Voltage between pin 2 and 3:
The voltage changes from 0.5V (throttle closed) to 4.5V (throttle open) with no intermediate steps.

pin 1 - 5V supply
pin 2 - reference earth
pin 3 - throttle opening signal
pin 4 - earth
pin 5 - N.C.
pin 6 - idle switch signal (throttle closed)

Lambda probe S35

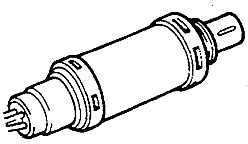

SPECIFICATIONS	
Heating resistance	3 Ω

Electroinjectrors S3

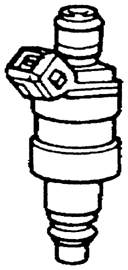

SPECIFICATIONS	
Winding resistance	15.9 ± 0.35 Ω

Fuel pump P18

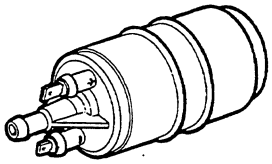

SPECIFICATIONS	
Flow rate	≥ 120 l/h
Pressure	4 bar
Nominal voltage	12V

Idle speed adjustment actuator (S29)

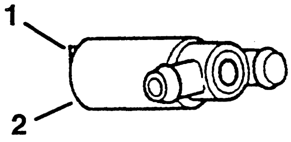

SPECIFICATIONS	
Resistance between terminals 1and 2	~ 8 Ω

Ignition coil (A8)/ Distribuitor

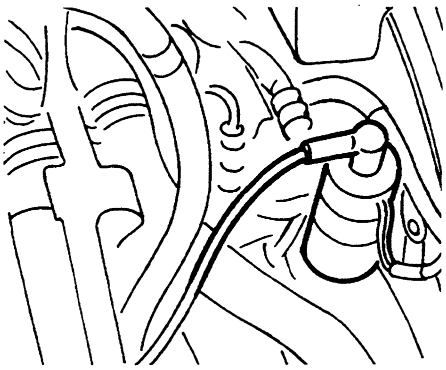

SPECIFICATIONS	
Primary resistance	0.7 ÷ 0.8 Ω
Secondary resistance	5.4 ÷ 6.6 kΩ
Distributor brush resistance	~ 1.1 kΩ

Ignition module (N1)

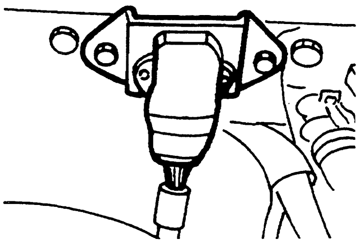

pin 1 - earth
pn 2 - earth
pin 3 - 12V at coil
pin 4 - control circuit

Pierbourg valve (L21)

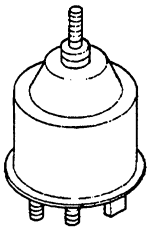

SPECIFICATIONS	
Ohmic resistance of winding	~ 30 Ω

Pinging sensor (S20a)(S20b)

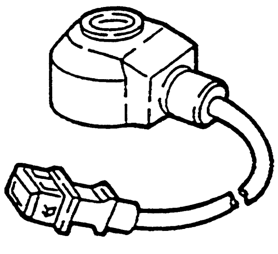

SPECIFICATIONS		
Resistence between terminals		> 20 kHz
Indipendence		≥ 1 MΩ
Vibration allowed	for long periods	≤ 80 g
	for short periods	≤ 400 g

Altitude sensor (S16)

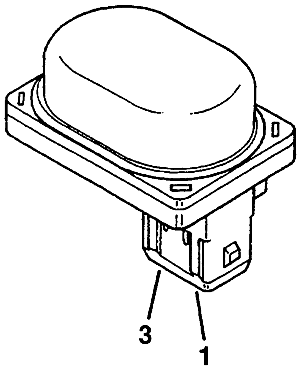

SPECIFICATIONS	
Resistence between	
pin 2 - 3	2 ÷ 3 KΩ
pin 1 - 2	0.5 ÷ 4.5 kΩ below 1.200m 2.5 ÷ 6.5 kΩ abow 1.200m

1st cylinder detection sensor (S39)

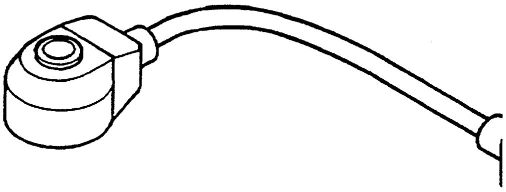

SPECIFICATIONS	
Resistence between pin 1 and 2	0.3 Ω

Evaporative solonoid valve (M15)

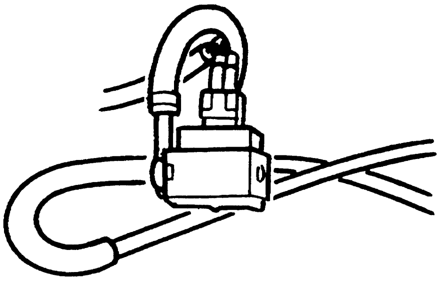

SPECIFICATIONS	
Flow rate (with voltage of 13.5V and vacuum of 0.6 bar)	≥ 4500 dm^3/h

Inertial switch (H20)

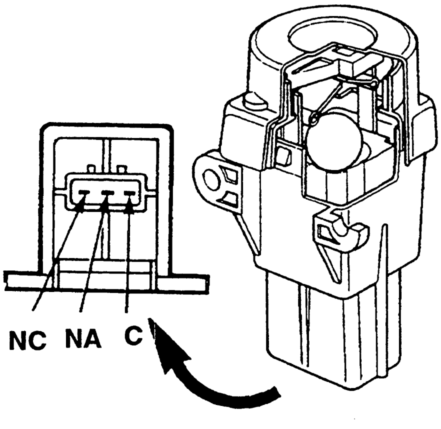

SPECIFICATIONS
Check the continuity between pins N.C. and C.: this continuity is connected by pressing the special pushbutton

FAULT-FINDING

The control unit possesses a self-diagnosis system which continuously monitors the signals leading from the different sensors for plausibility and compares them with the allowed limits: if these limits are exceeded the system detects a fault, memorizes it and turns on the warning light on the instrument cluster.
For certain parameters the control unit replaces the abnormal values with suitable mean values to enable the car to "limp" to a point of the Service Network.
These "recovery" values depend on the other correct signals and are defined each time by the operating logic of the control unit.
The self-diagnosis system also makes it possible to quickly and effectively locate faults by connection with the ALFA ROMEO TESTER, through which all the errors memorised may be "read". It is also possible to check the operating parameters recorded by the control unit and command the engagement of the single actuators to check whether they are working properly.

Diagnosis using the ALFA TESTER

N.B. Before carrying out diagnosis with the Tester, make the preliminary check given on the next page (TEST A).

The Tester and the control unit should be connected as follows:

1. Power the Tester either through the cigar lighter socket or connecting it directly to the battery using the special cable.
2. Connect the Tester socket to that of the control unit (the socket is to be found next to the control unit).

The Tester can give the following information:

- display of parameters;
- display of errors;
- active diagnosis.

Error clearing

Before ending diagnosis the contents of the "permanent" memory are erased using the Tester.

PRELIMINARY CHECK OF THE BOSCH M 4.1 SYSTEM	TEST A

NOTE: Check beforehand that the ALFA ROMEO CODE is working properly which might have cut off the supply to the system!

TEST PROCEDURE		RESULT	CORRECTIVE ACTION
A1	CHECK FUSE – Check intactness of fuses **S36**, **S47** and **G389**	OK ▶	Carry out **step A2**
		~~OK~~	Change fuses **S36**: 40A **S47**: 15A **G389**: 10A (from chassis no.____)
A2	CHECK VOLTAGE – Check 12V at pin 30 of relays **S41** e **S42**	OK ▶	Carry out **step A3**
		~~OK~~ ▶	Restore the wiring between the battery **A1** and relays **S41** and **S42**
A3	CHECK VOLTAGE – With the key turned, check for 12V at pin 85 of relay **S42**	OK ▶	Carry out **step A4**
		~~OK~~ ▶	Change any faulty relays
A4	CHECK RELAYS – Check the correct operation of relays **S41**, **S42** and **S12a**	OK ▶	Carry out **step A5**
		~~OK~~ ▶	Change any faulty relays
A5	CHECK CONTROL UNIT SUPPLY – Check for 12V at pin 18 of **S11**; with the key turned 12V also at pins 35 of **S11** and at pin 29 of **N23**	OK ▶	Carry out **step A6**
		~~OK~~ ▶	Restore the wiring between control units **S11** and **N23** and the relays and between the control units and fuse **S36**
A6	CHECK EARTH – Check for an earth at pins 16 and 27 of **S11** and at pins 15, 18 and 31 of **N23**. Also check for an earth at pin 86 of S42 and pin 86 of **S41**	OK ▶	**CONTINUE DIAGNOSIS USING THE ALFA ROMEO TESTER**
		~~OK~~ ▶	Restore thre wiring between **S11, N23** and the relay and earth **G131**

KEY TO COMPONENTS

A	**STARTING - RECHARGING**
A1	Battery
A3	Alternator, with integrated voltage regulator
A8	Ignition coil
A8a	Ignition coil A
A8b	Ignition coil B
A11	Starter motor
A12	Spark plugs
B	**MANUAL ELECTRICAL CONTROLS**
B1	Ignition switch
B9	Heated rearscreen control switch
B10	Fog lights control switch
B11	Rear fog guards control switch
B12	Hazard warning lights control switch
B16	Instrument panel light dimmer button
B21a	Right front power window control switch (on RH door)
B21b	Right front power window control switch (on LH door)
B36	Wing mirror control switch
B40	Trip meter reset switch
B47	Sun roof motor control switch
B53	Front power window switch with automatic mechanism
B61	Fuel flap opening switch
B68	Steering column lever unit
B69	Headlamp aiming device
B87	Luggage compartment opening switch with glove box light
B98	Air recirculation switch
C	**INSTRUMENTATION**
C10	Instrument cluster
C18	Auxiliary instrument cluster
D	**WARNING LIGHTS**
D31	Anti-theft device led indicator
D43	Signalling led for automatic hood
E	**EXTERIOR LIGHTS**
E1a	LH front direction indicator bulb
E1b	RH front direction indicator bulb
E2a	LH front side light bulb
E2b	RH front side light bulb
E5a	LH low beam light bulb
E5b	RH low beam light bulb
E7a	LH high beam light bulb
E7b	RH low beam light bulb
E9a	LH direction indicator light bulb
E9b	RH direction indicator light bulb
E10a	LH fog light bulb
E10b	RH fog light bulb
E17a	LH number plate light bulb
E17b	RH number plate light bulb
E19	RH tail light cluster
E20	LH tail light cluster
E28	Third stop light
E30	Rear RH fog guard/reversing light
E31	Rear LH fog guard/reversing light
F	**INTERIOR LIGHTS**
F3	Passenger compartment ceiling light
F5	Luggage compartment light
F8a	Heating/ventilation controls light bulb a
F8b	Heating ventilation controls light bulb b
F23	RH foot well light
F24	LH foot well light
F45	Light on LH front door
F46	Light on RH front door
G	**FUSEBOX - CONNECTORS - EARTHS**
G1	Fusebox
G3	Fusebox terminal connector
G4	Free fuse
G21	Connector for RH front door wiring
G23	Connector for LH front door wiring
G38	Air conditioner wiring connector
G43	Connector for heating and ventilation control wiring
G53a	RH engine compartment earth
G53b	LH engine compartment earth
G55b	LH side panel earth
G56	Branch terminal board
G60	Injection wiring earth
G63a	RH rear earth
G63b	LH rear earth
G65	Coaxial cable for aerial
G73	Connector for rear services
G73b	Connector for rear services
G84	Console wiring connector
G92	Luggage compartment earth
G99	Connector for dashboard wiring/engine wiring
G115	Connector for tow bar trailer socket
G124	ABS system connector
G125a	ABS system fuse
G125b	ABS system fuse
G131	Earth on upper cover
G133a	Connector for electronic injection wiring A
G133b	Connector for electronic injection wiring B
G148b	Earth under dashboard LH
G193	Connector for electric aerial wiring
G202	Connector for ABS system earth
G219	Connector for sun roof
G254	Fuse for engine fan
G255	Fuse for heating and ventilation fan
G261	Fuse for sun roof
G272	Connector for ABS hydraulic unit
G273	ABS control unit connector
G308	Connector for engine sensors
G310	Fuse for RH front power window

G311	Fuse for LH front power window
G313	Connector for additional conditioner wiring
G314a	Connector for engine wiring / conditioner wiring A
G314b	Connector for engine wiring / conditioner wiring B
G320	Connector for rear loudspeaker cables
G337	Connector for conditioner syst./injection syst.
G380	Airbag connector
G380a	Airbag connector
G381	Earth for airbag
G383	Connector for airbag capsule
G384	Services supply fuse
G385	Connector for wiring in front bumper
G389	Fuse for ALFA ROMEO CODE unit
G391	Rear fog guard fuse

H SWITCHES

H1	Handbrake switch
H2	Reversing light switch
H3	Stop lights switch
H9	RH front brake pad switch
H10	LH front brake pad switch
H17	Brake fluid minimum level switch
H20	Inertial switch
H24	Luggage compartment light switch
H44	Bonnet anti-theft device switch
H51	Sun roof stroke limit switch

I RELAYS

I2	Heated rearscreen relay
I3	Horn relay
I17	Fog light relay
I26	Ceiling light relay
I29	Fuel pump relay
I35	Key-operated supply relay
I49	Low beam relay
I50	High beam relay
I52	Luggage compartment opening relay
I53	Fuel flap opening relay
I58	Sun roof relay
I64	Side lights relay
I99	Engine cooling fan 1st speed relay
I99a	Engine cooling fan 1st speed relay
I99b	Engine cooling fan 1st speed relay
I100	Engine cooling fan 2nd speed relay
I106	Hood release relay

L SENDERS

L2	Minimum engine oil pressure
L9	Sender for fuel level gauge
L10	Sender for engine coolant temperature gauge and max. temperature warning light contact
L17	Speedometer sensor
L28	RH front phonic wheel inductive sensor
L29	LH front phonic wheel inductive sensor
L30	RH rear phonic wheel inductive sensor
L31	LH rear phonic wheel inductive sensor
L33	Two-level thermal contact
L46	E.G.R. solenoid valve

M ELETTROMAGNETS - SOLENOID VALVES

M12	Luggage compartment opening actuator electromagnet
M13	Fuel flap opening actuator electromagnet
M15	Evaporation solenoid valve

N ELECTRONIC DEVICES - INTERMITTENCES- TIMERS

N1	Electronic ignition module
N11	Door locking control unit
N13	Hazard warning lights and direction indicators intermittence
N14	Electronic windscreen wiper intermittence
N18	Electronic headlamp switching device
N23	Ignition control unit
N25	Rear fog guard electronic device
N38	Power window control unit
N45	Anti-theft device control unit
N51	Hydraulic unit with ABS control unit
N53	Anti-disturbance condenser on luggage compartment light
N60	Sun roof control unit
N67	Remote control signal receiver
N77	ALFA ROMEO CODE control unit
N78	ALFA ROMEO CODE receiver
N79	Car radio supply antidisturbance condenser
N80	Hood cover release timer

O SERVICES

O1	Heated rearscreen
O2a	High tone horn
O2b	Low tone horn
O3	Aerial
O4	Car radio
O5a	RH front loud-speaker
O5b	LH front loud-speaker
O5c	RH rear loud-speaker
O5d	LH rear loud-speaker
O6	Cigar lighter - current socket
O18	RH wing mirror defroster
O19	LH wing mirror defroster
O22a	Additional engine fan resistance
O22a	Additional engine fan resistance
O31a	RH Tweeter loud-speaker
O31b	LH Tweeter loud-speaker
O37	Rear subwoofer speaker

P ELECTRIC MOTORS

P2	Engine cooling fan
P2a	Engine cooling fan
P2b	Engine cooling fan
P8	LH wing mirror motor
P9	RH wing mirror motor

P10	Front RH door lock motor
P11	Front LH door lock motor
P14	Front RH power window motor
P15	Front LH power window motor
P18	Electric fuel pump
P19	Windscreen and rearscreen washer pump
P24	Sun roof motor
P27	Windscreen wiper motor with control unit
P35a	RH headlamp aiming motor
P35b	LH headlamp aiming motor

Q	**HEATING/VENTILATION - AIR CONDITIONING**
Q1	Heater fan
Q4	Heater fan control
Q5	Heater fan speed adjustment resistance
Q9	Minimum pressure switch
Q11	Compressor electromagnetic coupling
Q15	Heating and ventilation fan relay
Q20	Min. and max. sensor pressure contact (Trinary)
Q22	Electromagnetic coupling relay
Q27	Air recirculation flap control motor
Q32	Auxiliary relay for heating and ventilation
Q39	Fuse for conditioning system (30A)
Q40	Fuse for conditioning system (15A)
Q41	Set of relay and fuses for air conditioner
Q42	Conditioner fan delay device
Q65	Fuse for conditioning system
Q68	Compressor and air recirculation engagement switches
Q69	Heater fan 1st speed relay

R	**SAFETY DEVICES**
R22	Airbag control unit
R23	Capsule on steering wheel for airbag
R27	Passenger's side airbag capsule
R28	Capsule on RH pretensioner
R29	Capsule on LH pretensioner

S	**ELECTRONIC INJECTION**
S3	Elettroinjectors
S5	Air flow meter
S7	Engine temperature sensor
S11	Motronic control unit
S12a	Motronic fuel pump relay
S12c	Phase variator relay
S12e	Air flow meter relay
S15	Phase variator
S20	Pinging sensor
S20a	Pinging sensor a
S20b	Pinging sensor b
S29	Idle adjustment actuator
S31	Rpm and crankshaft position sensor
S34	Air temperature sensor
S35	Heated lambda probe
S36	Fuse for injection relay
S38	Sensor on throttle body
S41	Main relay
S42	Secondary relay
S43	Absolute pressure sensor
S45	Lambda probe fuse
S46	Fuse for Motronic supply
S47	Fuse for fuel pump
S52	Cam angle sensor

T	**DIAGNOSIS**
T1	Connector for ALFA TESTER (Motronic and ALFA ROMEO CODE)
T3	Connector for ALFA TESTER (airbag)
T7	Connector for ALFA TESTER (anti-theft device)
T8	Connector for ALFA TESTER (ABS)

COMPONENTS AND CONNECTORS

N.B. : here only the connectors which differ from the "Spider- Gtv" manual are given

Ignition coil

A8

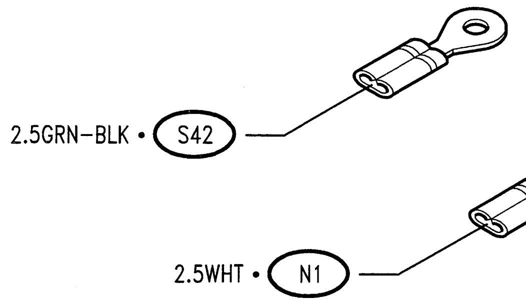

Instrument cluster

C10 B

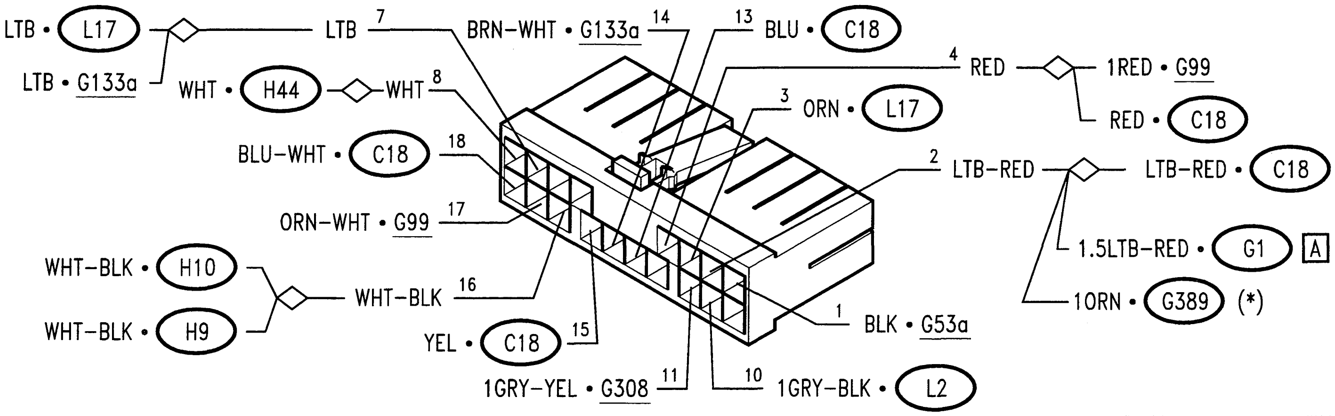

Air conditioner wiring connector

G38

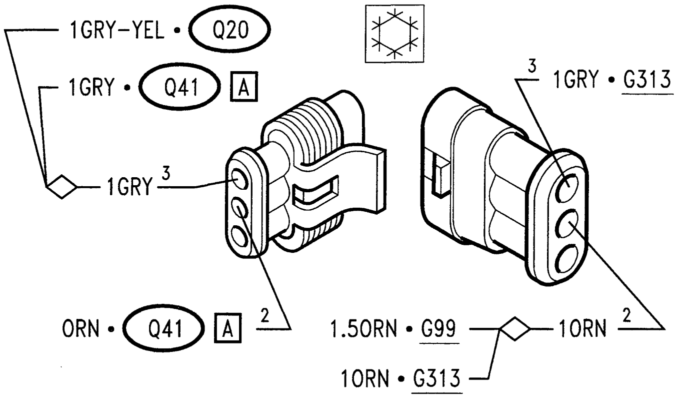

Earth on upper cover

G131a

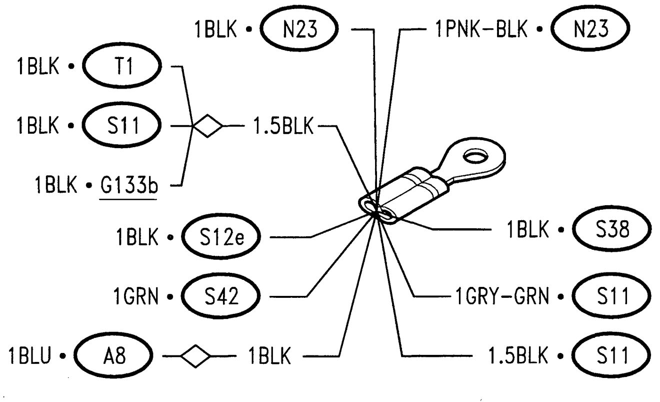

(*) from chassis no.___

Earth on upper cover

G131b

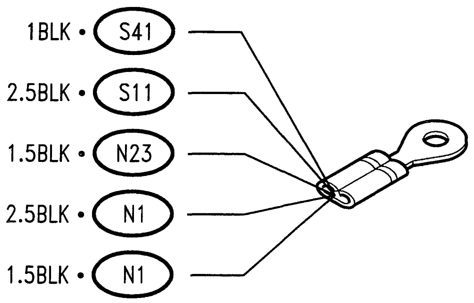

Connector for electronic injection wiring A

G133a

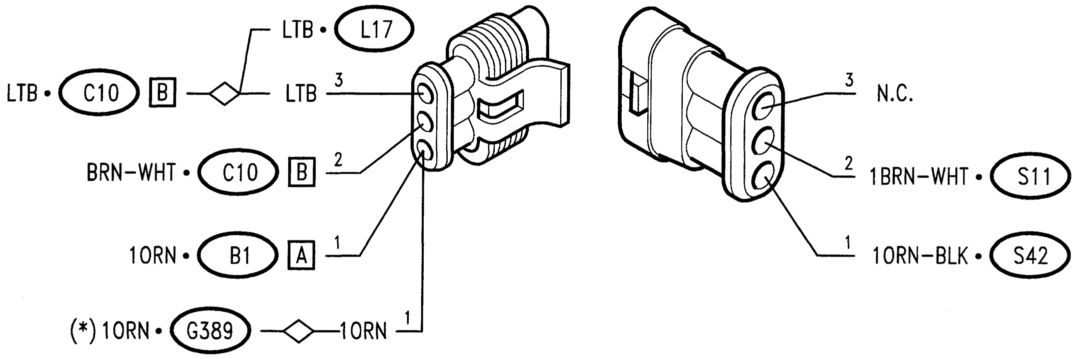

Connector for electronic injection wiring B

G133b

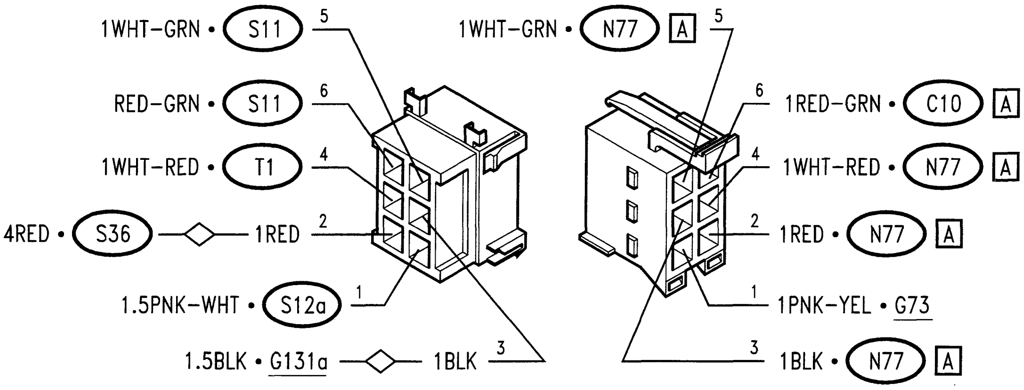

Connector for conditioner syst./injection syst.

G337

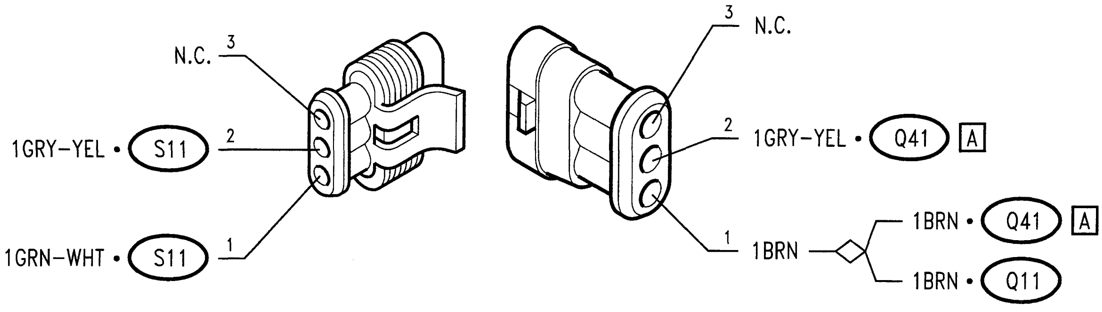

(*) from chassis no.___

Minimum engine oil pressure (L2)

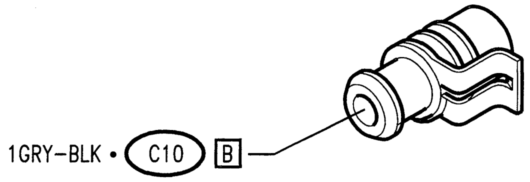

Solenoid valve regulating the supercharging pressure (L21)

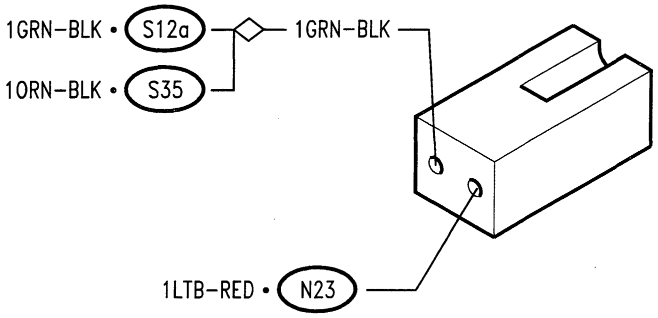

Evaporation solenoid valve (M15)

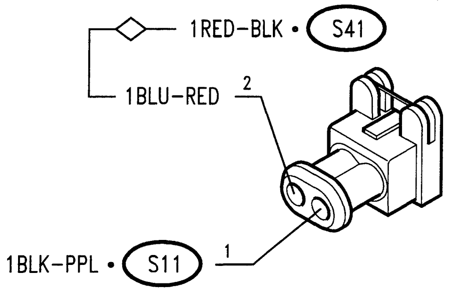

Electronic ignition module (N1)

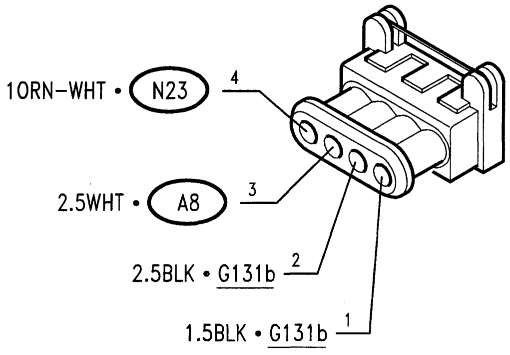

Ignition control unit

N23

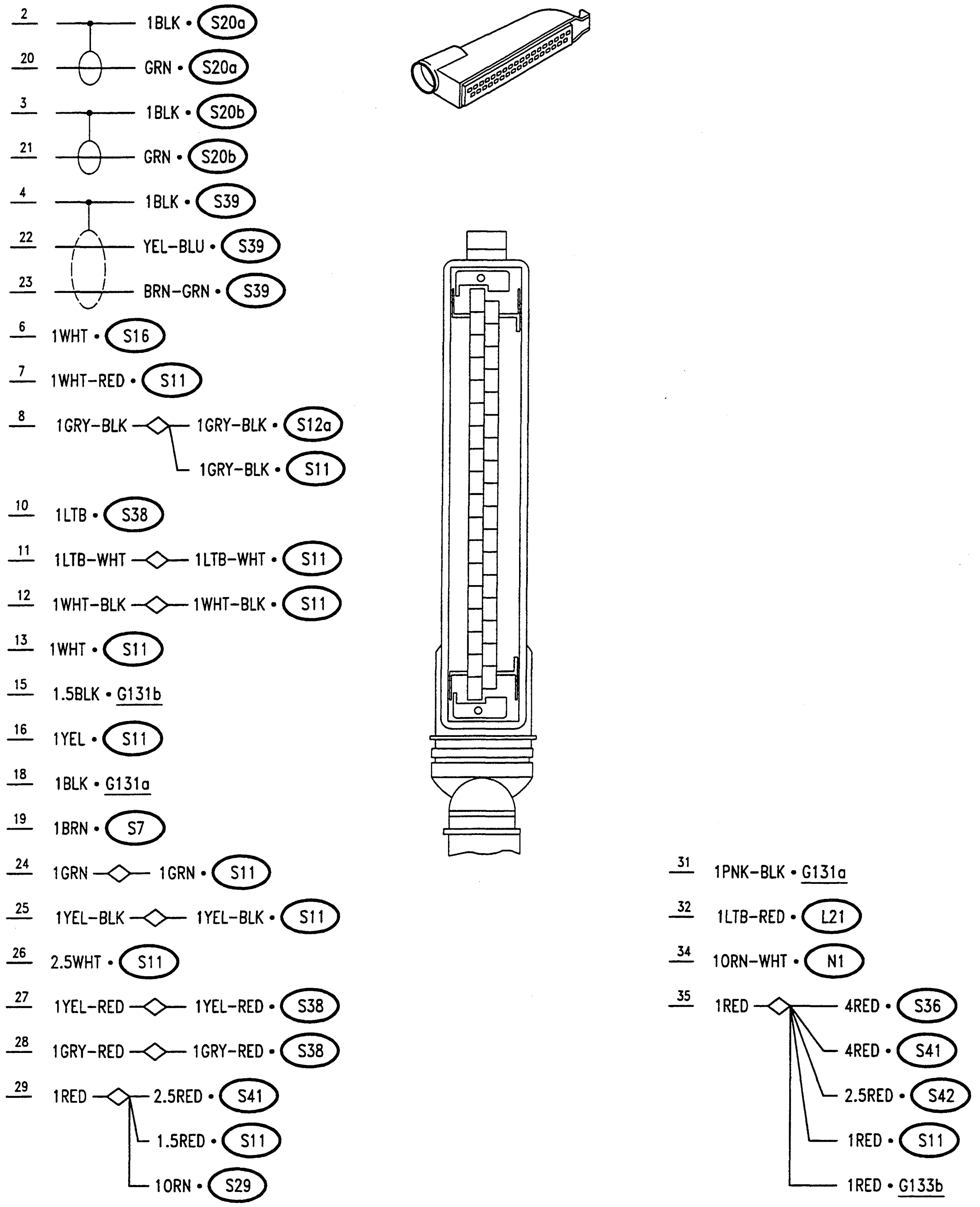

Compressor electromagnetic coupling

Q11

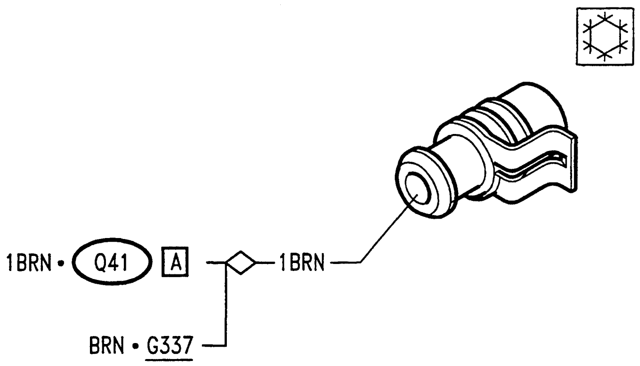

Min. and Max. sensor pressure contact (Trinary) — Q20

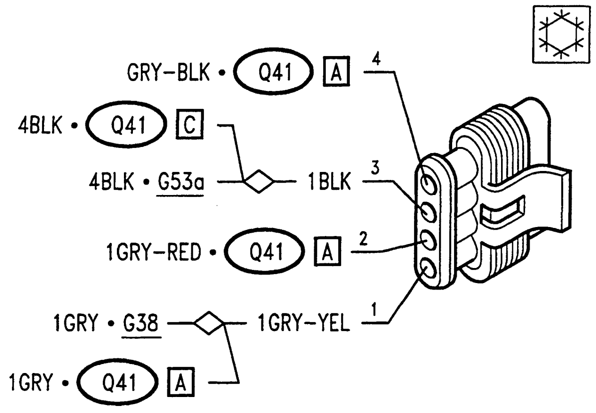

Set of relay and fuses for air connditioner — Q41 A

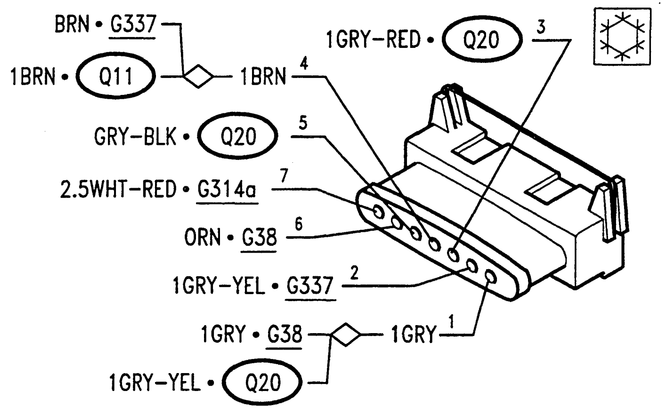

Electroinjectors — S3

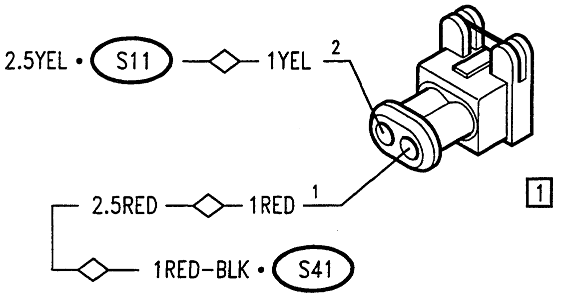

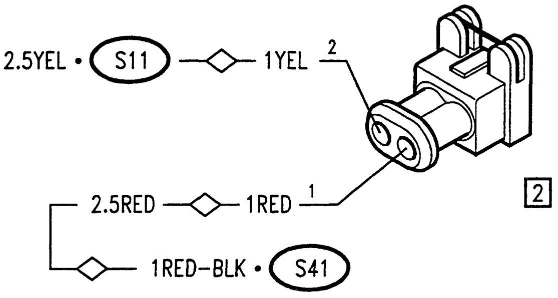

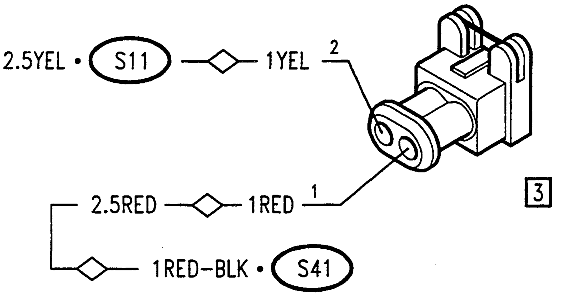

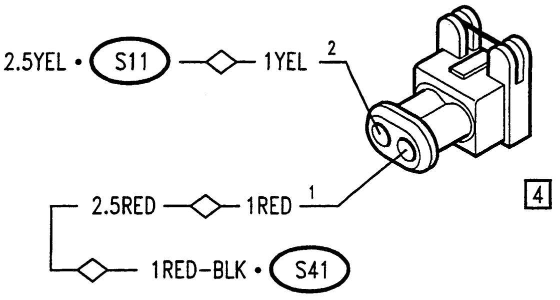

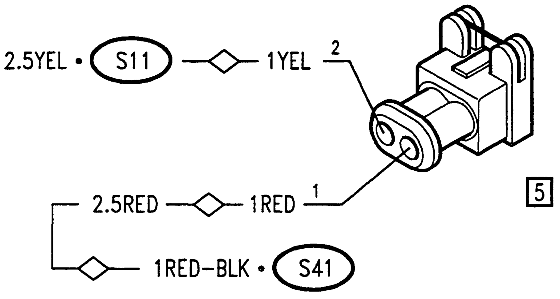

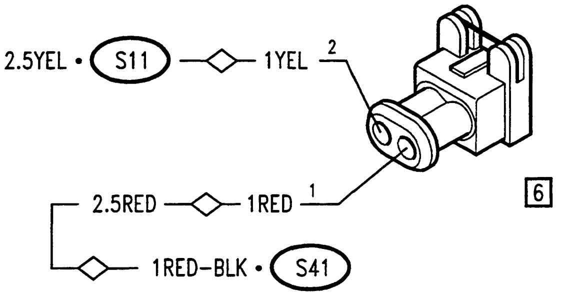

Air flow meter

S5

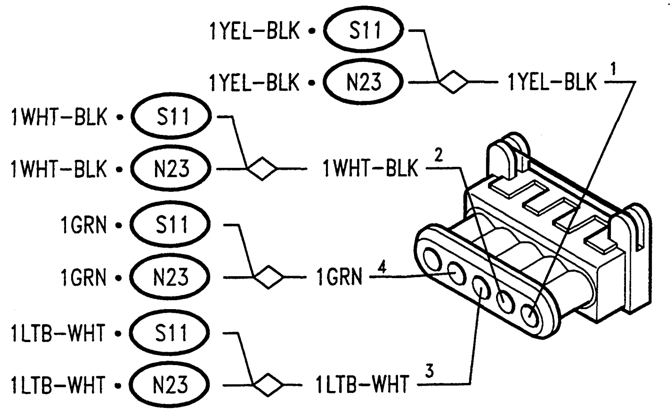

Engine temperature sensor

S7

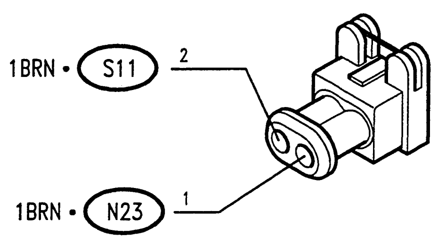

Motronic control unit

S11

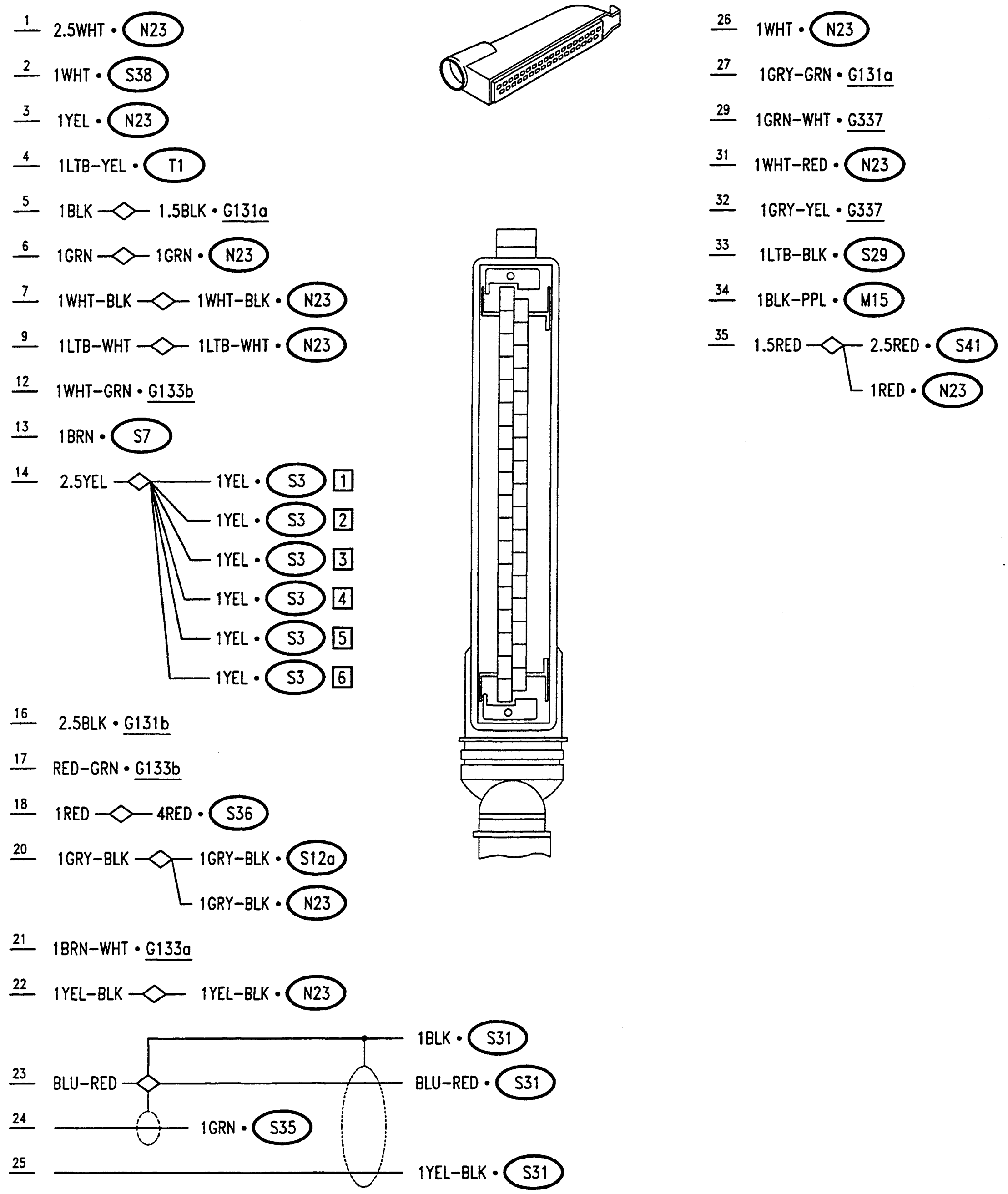

Motronic fuel pump relay S12 A

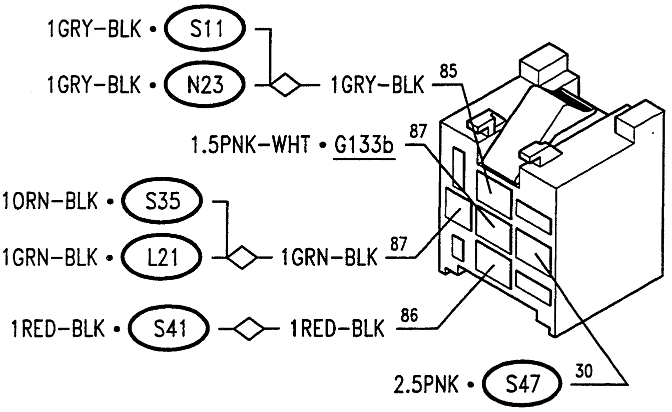

Altitude air regulator S16

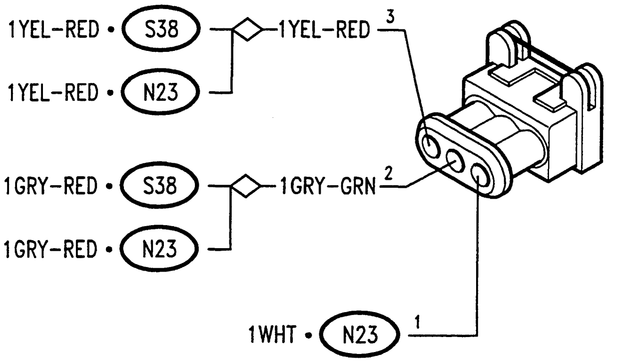

Pinging sensor a S20 A

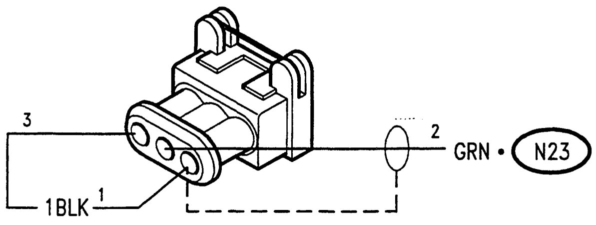

Pinging sensor b S20 B

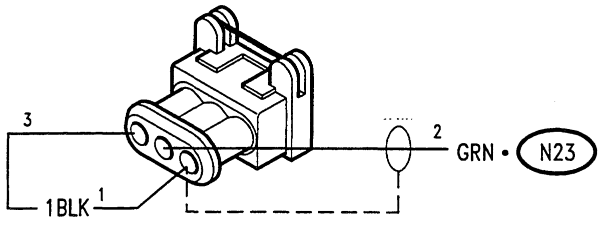

Idle adjustment actuator S29

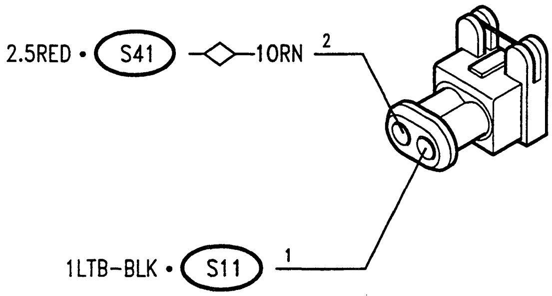

Rpm and crankshaft position sensor S31

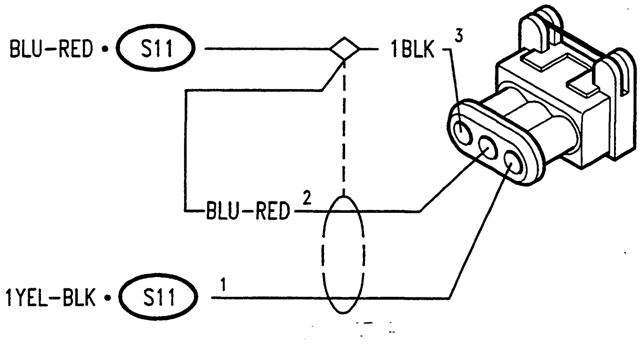

Heated lambda probe S35

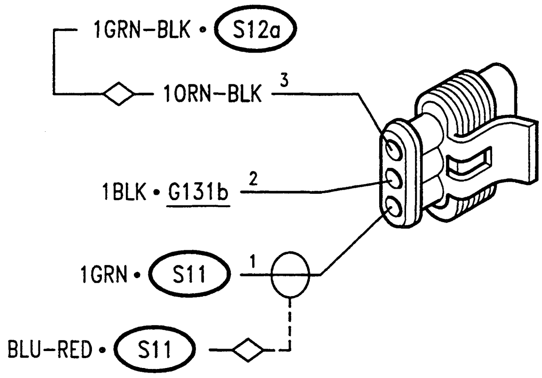

Fuse for injection relay S36

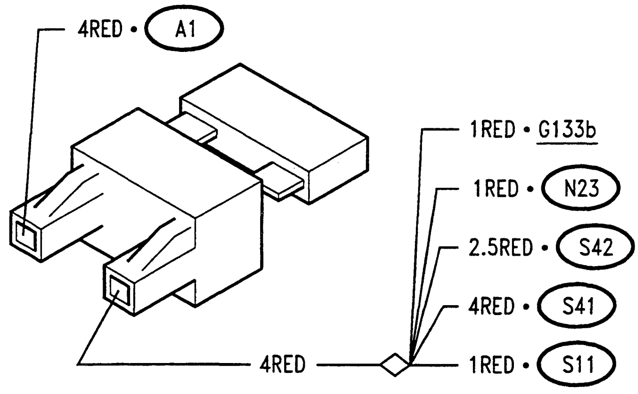

Sensor on throttle body	S38	Cylinder No. 1 recognition sensor	S39

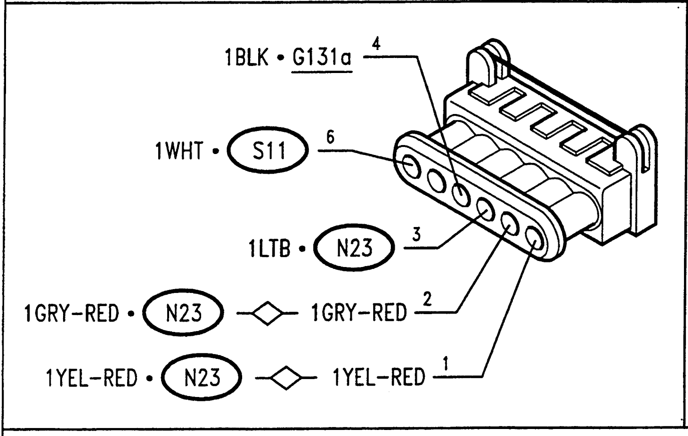

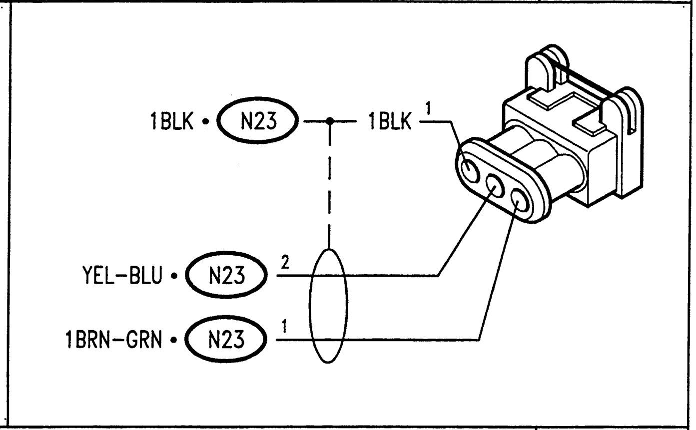

Main relay	S41

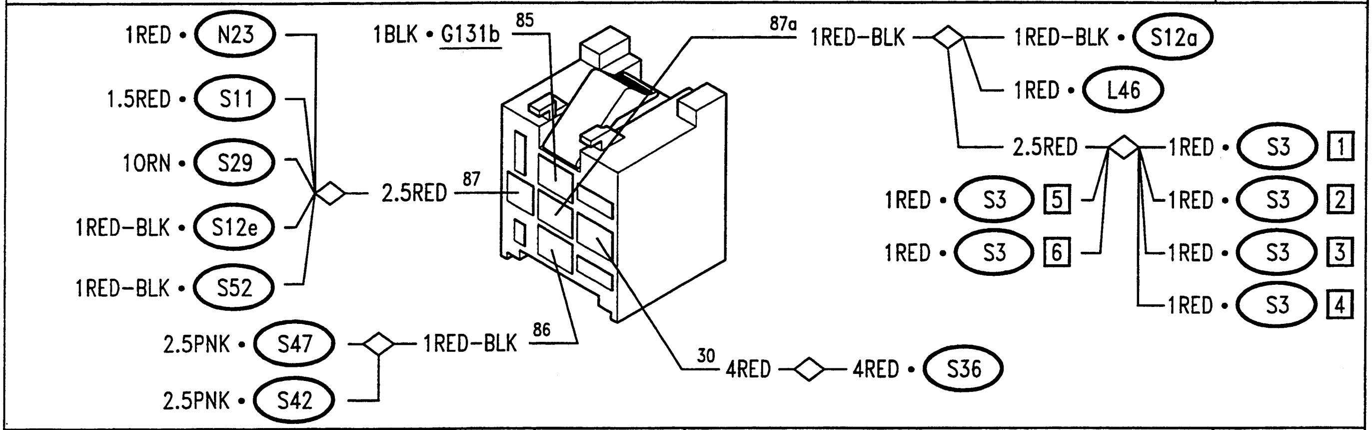

Secondary relay	S42	Fuse for fuel pump	S47

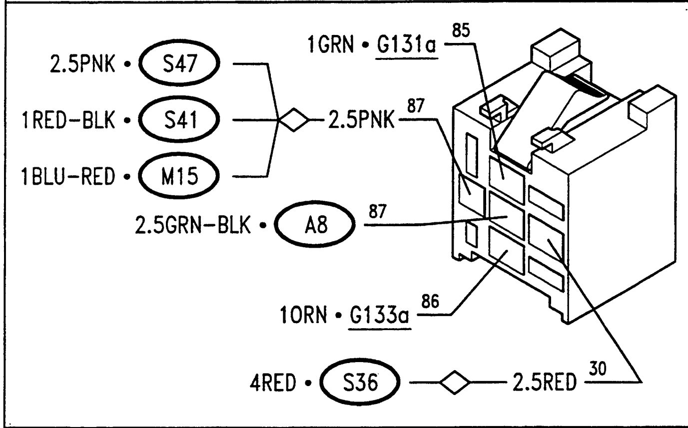

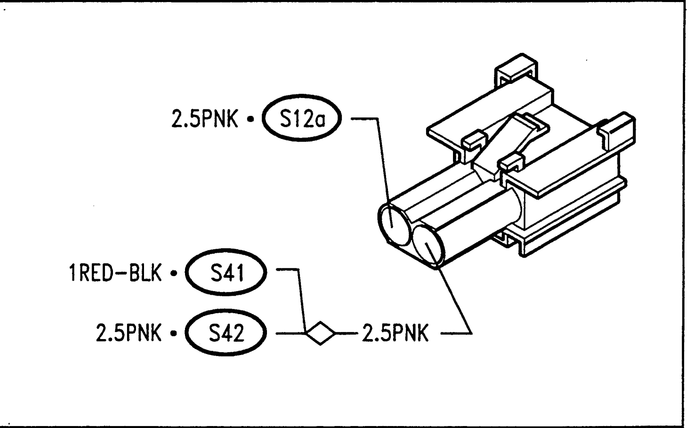

Connector for ALFA TESTER (Motronic and ALFA ROMEO CODE)	T1

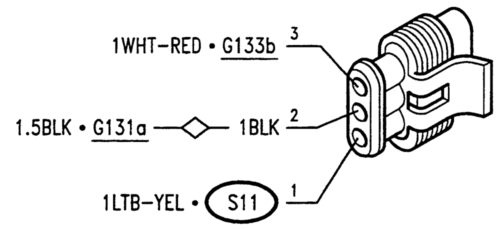

VARIANTS FOR Gtv 2959 24V

INDEX

ELECTRIC SYSTEM

55

ELECTRIC SYSTEM DIAGNOSIS

55

FOR THE INFORMATION NOT GIVEN HEREIN, REFER TO THE CORRESPONDING GROUP OF "SPIDER-GTV".
THE REFERENCE ENGINE IS THE "6 CYLINDER " (3.0 V6 ENGINE)

IGNITION COILS

REMOVING/REFITTING

- Remove the intake box (see specific paragraph).

1. Disconnect the electrical connections from the ignition coils of the right cylinder head.

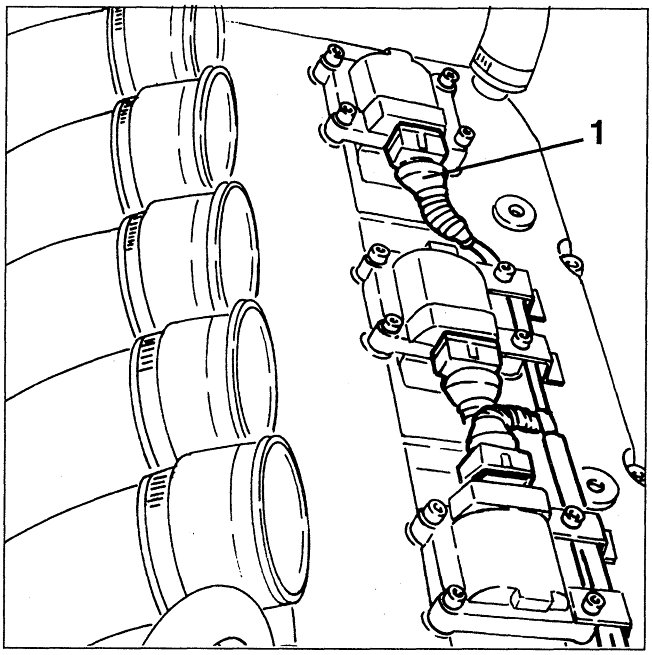

1. Slacken the fastening screws and remove the ignition coils frrom the right cylinder head.

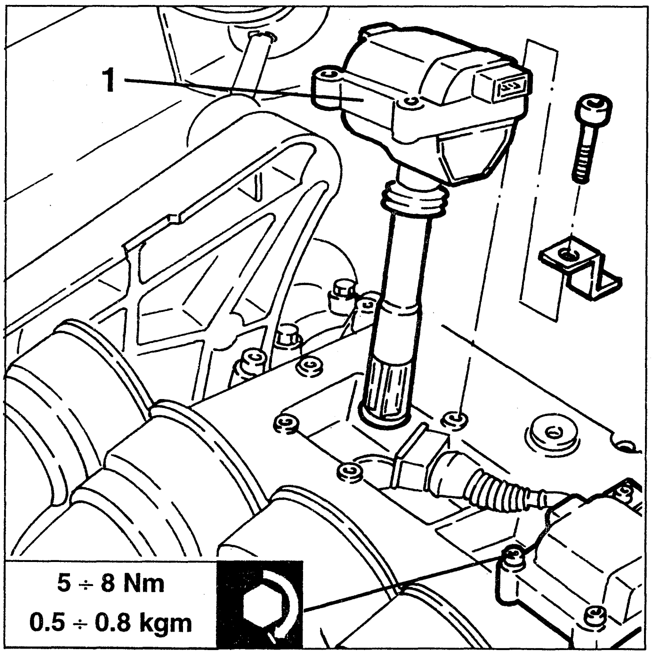

1. Slacken the fastening screws and remove the ignition coil cover of the left cylinder head.

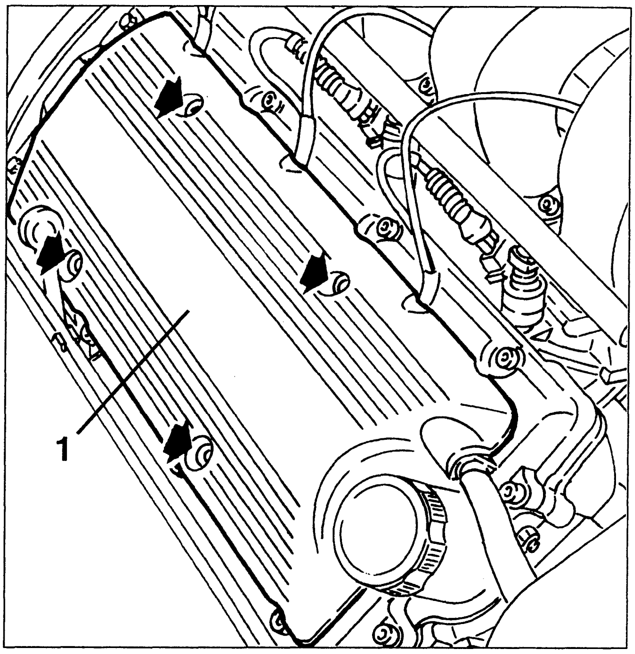

1. Disconnect the electrical connections from the ignition coils of the left cylinder head.

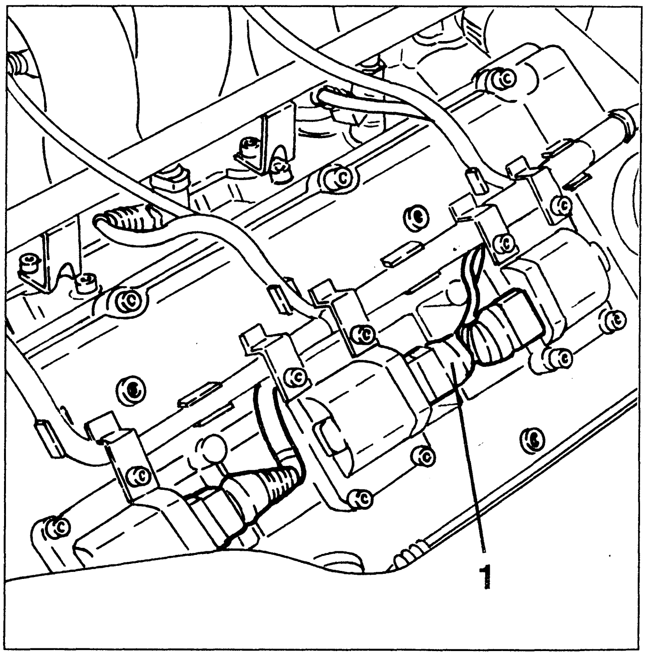

1. Slacken the fastening screws and remove the ignition coils frrom the left cylinder head.

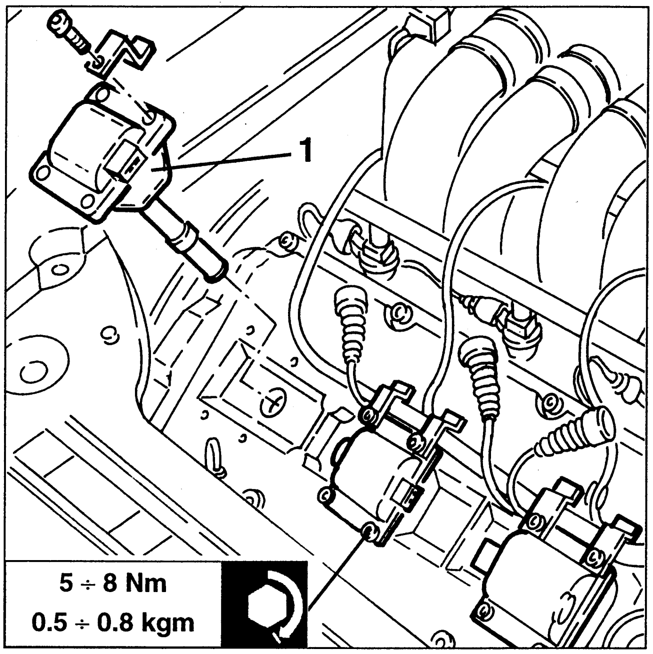

SPARK PLUGS

The standard spark plugs are of the type with surface discharge with a peripheral point and one centre electrode.
In order to operate correctly this type of spark plug must have a correct gap between electrodes.

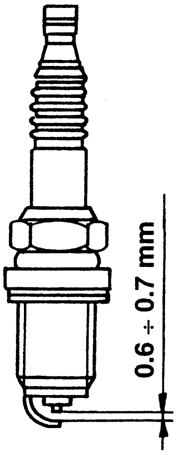

Checking and replacement

- Remove the ignition coils (see specific paragraph).
1. With the engine cold, remove the spark plugs firstly blowing in the recesses to remove any impurity and traces of dirt.

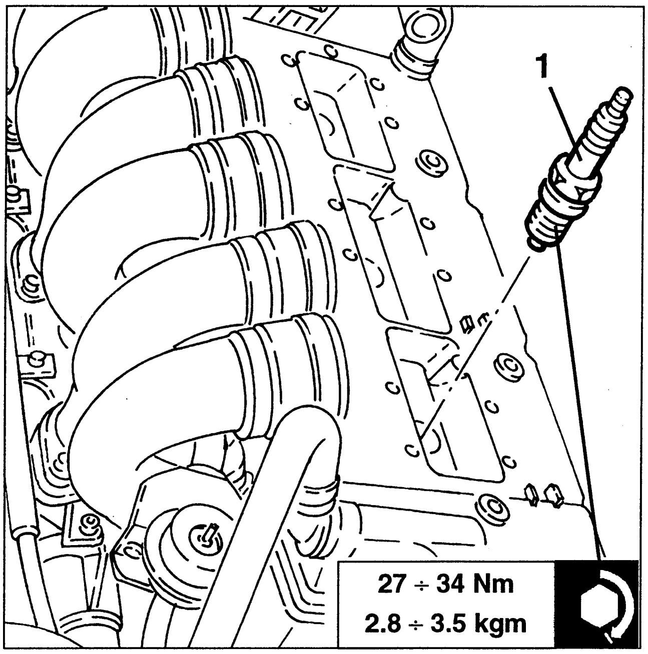

- Check cleaning and for any breaks of the ceramic insulant. In this case change the spark plugs.

WARNING:
The use of spark plugs with characteristics or sizes other than those specified can cause damage to the engine and alter the level of harmful emissions at the exhaust.

A dirty or burnt spark plug is often a symptom of an engine fault. For example:
- **traces of carbon dust: incorrect mixture, air cleaner very dirty;**
- **oil stains: oil leaks from piston rings;**
- **formation of ash: presence of aluminium materials in particular in the oil;**
- **melted electrodes: overheating due to unsuitable fuel, valve defects;**
- **high electrode wear: harmful additives in the fuel or oil, pinging in the cylinder head, overheating.**

- Install new spark plugs tightening them to the specified torque, then complete refitting reversing the sequence followed for removal.

STARTER MOTOR

The starter motor cranks the engine overcoming the inertia and friction, and bringing it to a determinate rpm that can start the formation of the mixture required for combustion and thus autonomous movement of the engine itself.
The movement is transmitted by an direct current electric motora operated by the battery, through an engagement pinion which turns the special rings gear machined on the flywheel.

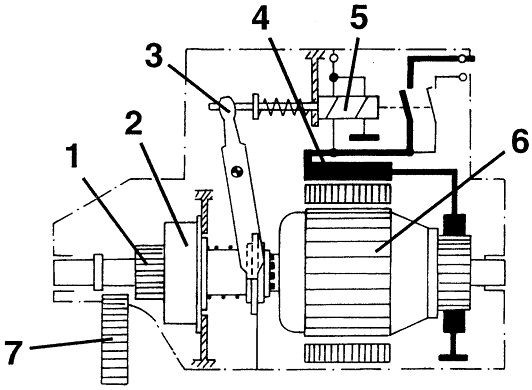

1. Pinion
2. Roller idler wheel
3. Engagement lever
4. Energising winding
5. Relay
6. Stator
7. Flywheel ring gear

Owing to an idler wheel engagement, the pinion disengages when the main engine turns faster than the motor.
A relay energised by the motor current engages the pinion through a fork.
The starter motor is of the translation and screwing type, with relay housed directly above the motor.

REMOVING/REFITTING

- Set the car on a lift.
- Remove the front wheels and mud flaps.

1. Raise the car and remove the front section of the exhaust pipe.

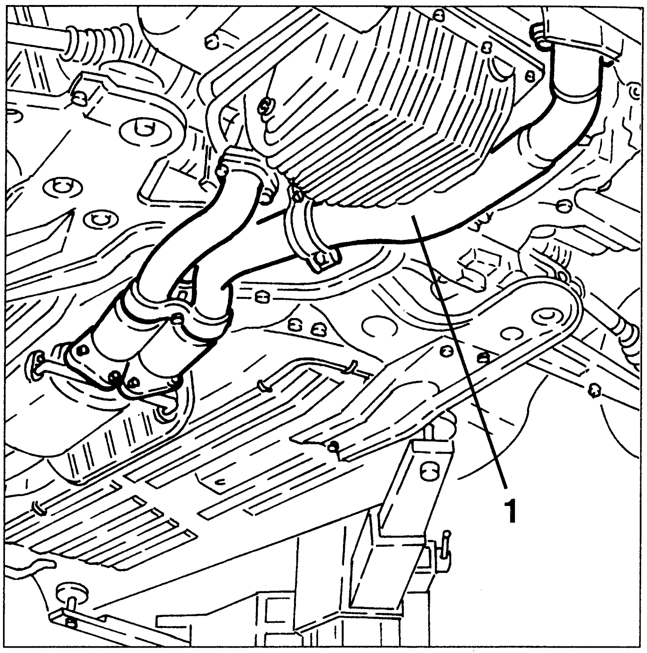

1. From the exhaust manifold of the right cylinder head disconnect the union of the exhaust gas takeoff pipe for E.G.R. valve.
2. Slacken the fastenings and remove the heat guard from the power steering box.

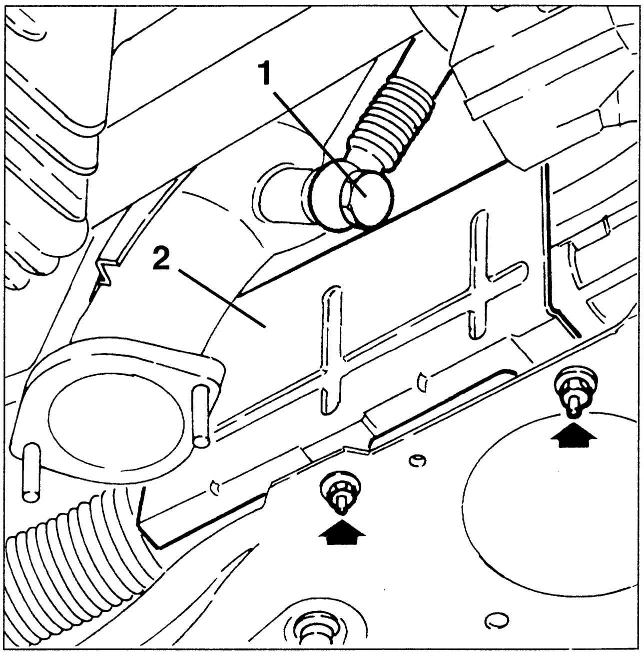

1. Lower the car, then disconnect the vacuum signal tube leading from the modulating solenoid valve from the E.G.R. valve.
2. Slacken the fastening screws and remove the E.G.R. valve complete with exhaust gas takeoff pipe.

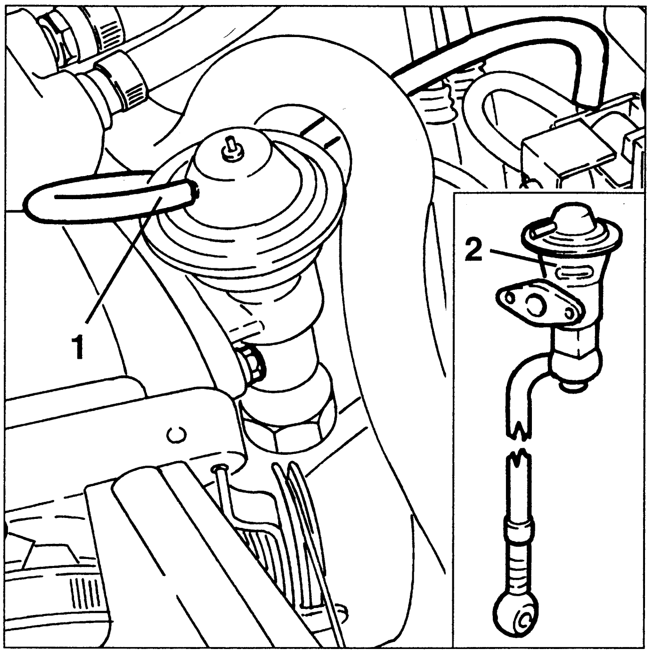

1. Slacken the fastenings and remove the heat guard.

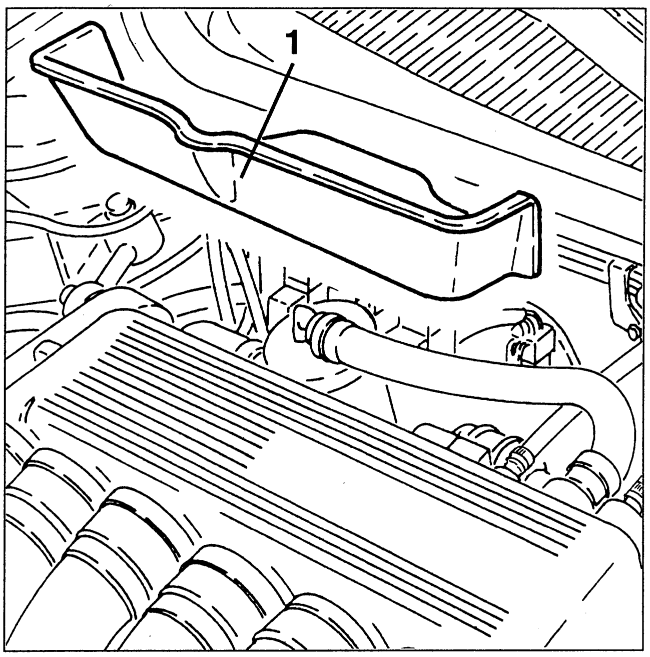

1. Remove the plastic cover protecting the relays, fuses and electrical connections.

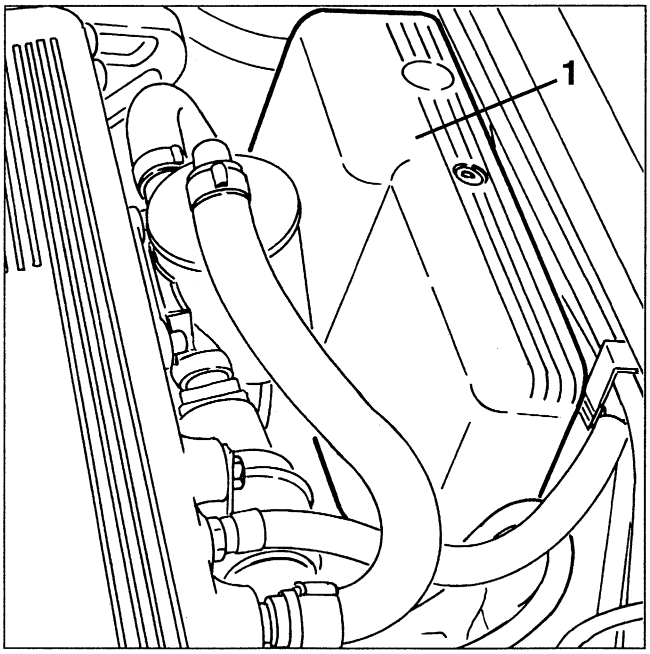

1. Install a special engine support bracket on the cylinder head.

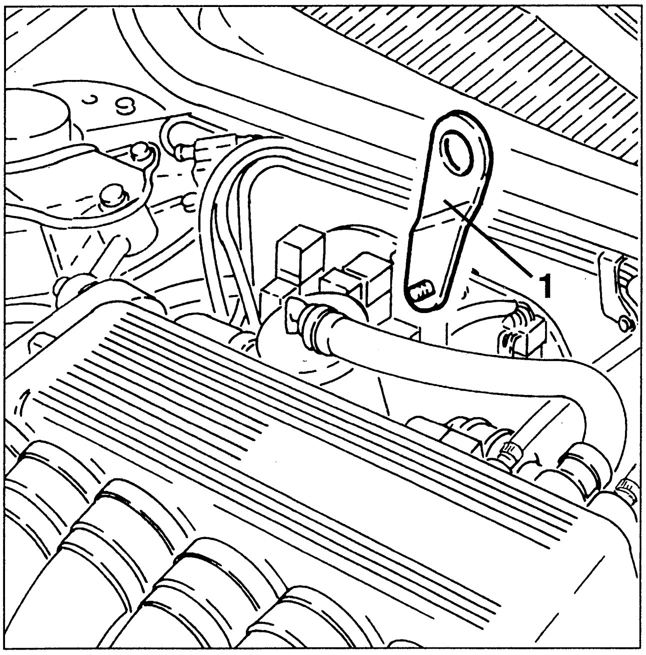

- Working from the engine compartment slacken the nuts fastening the exhaust manifold to the right cylinder head.

1. Install cross rail no.1.820.581.000 (R.4.0194) complete with supports no. 1.820.239.000 for supporting the power unit.

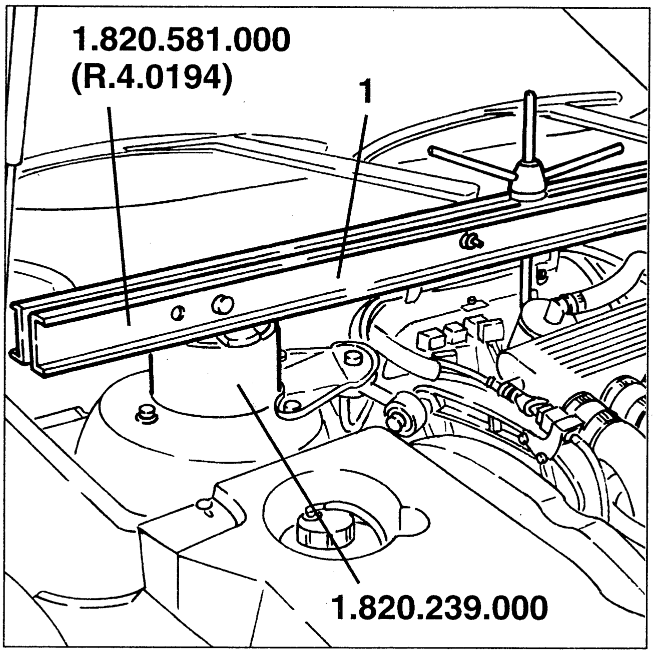

1. Position a hydraulic jack under the gearbox as illustrated.
2. Slacken the fastening screws and remove the rear power unit support.

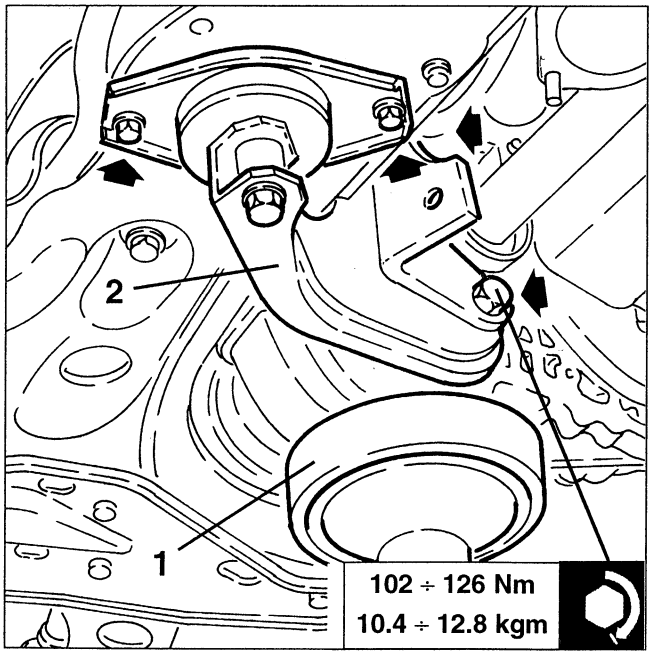

102 ÷ 126 Nm
10.4 ÷ 12.8 kgm

1. Raise the car and slacken the bolts fastening the wishbones to the wheel uprights.

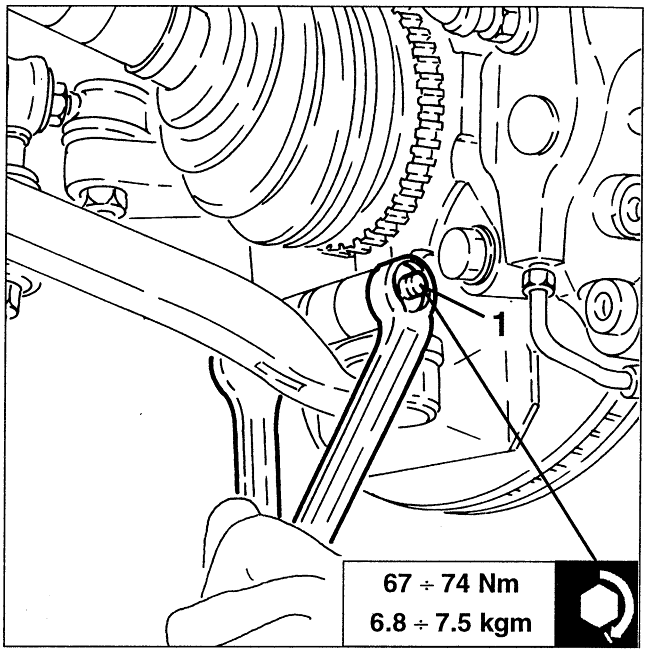

67 ÷ 74 Nm
6.8 ÷ 7.5 kgm

- Using a hydraulic jack support the cross rail using tool no. 1.860.978.000.

1. Slacken the cross rail fastening nuts and screws, then remove it complete with wishbones, stabiliser bar and reinforcements.

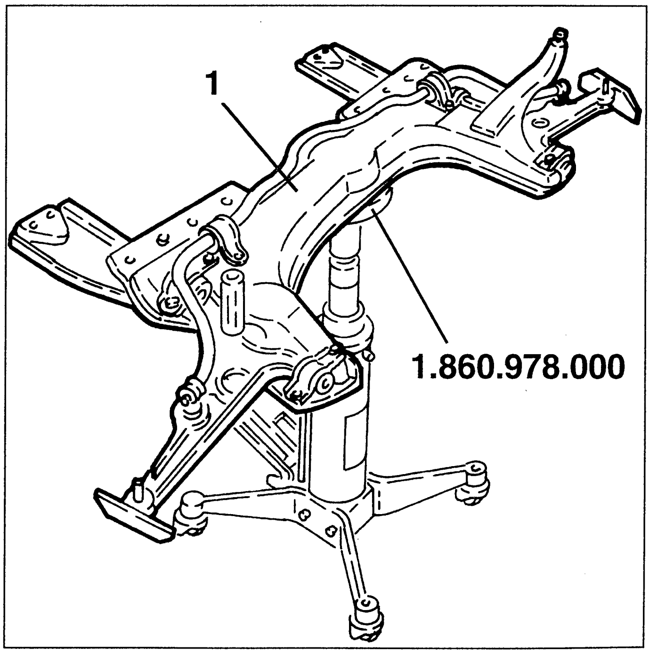

1. Recover the exhaust manifold from the right cylinder head complete with heat shields.

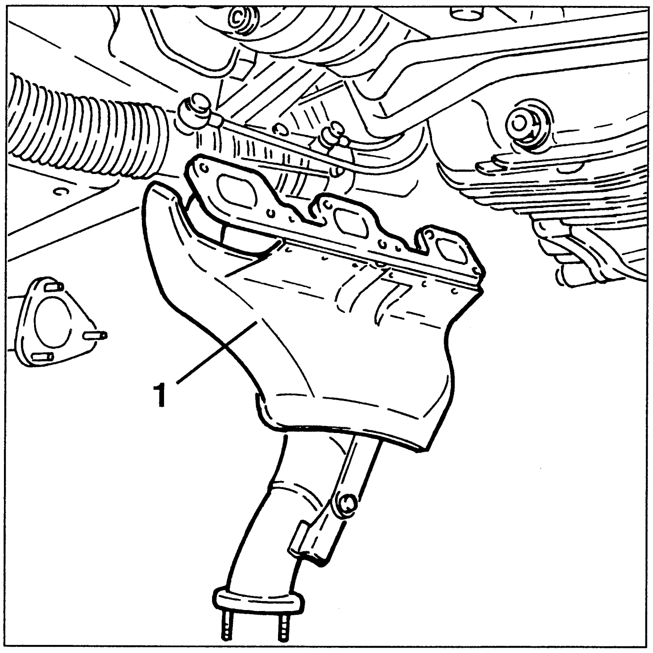

1. Slacken the nut fastening the rear starter motor bracket to the oil filter support.
2. Slacken the two nuts fastening the rear bracket to the starter motor.

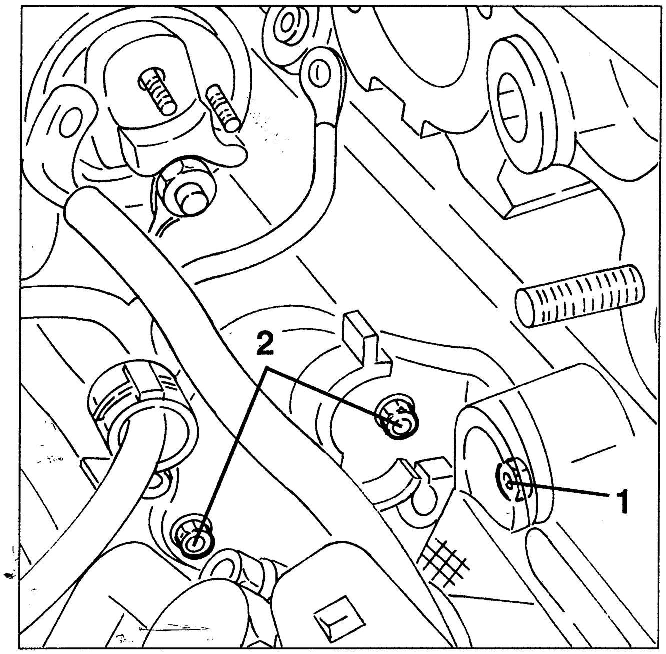

1. Disconnect the electrical connections from the starter motor.

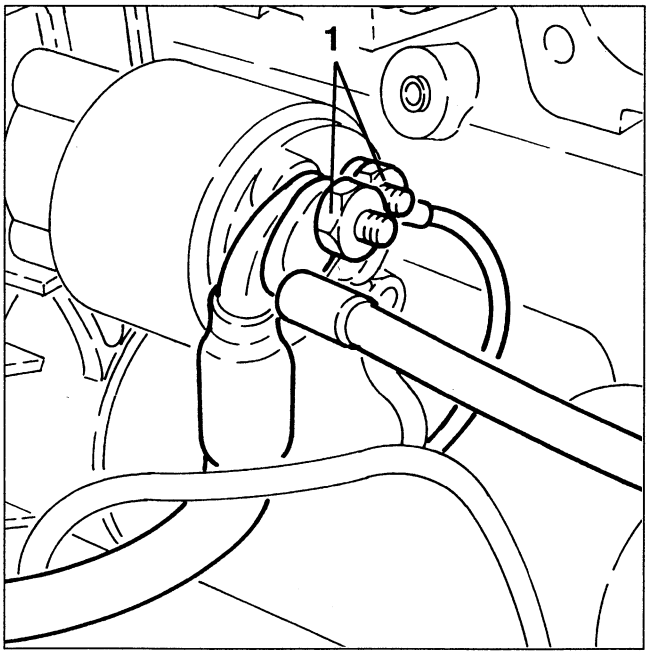

1. Slacken the fastening screws and remove the starter motor complete with rear bracket.

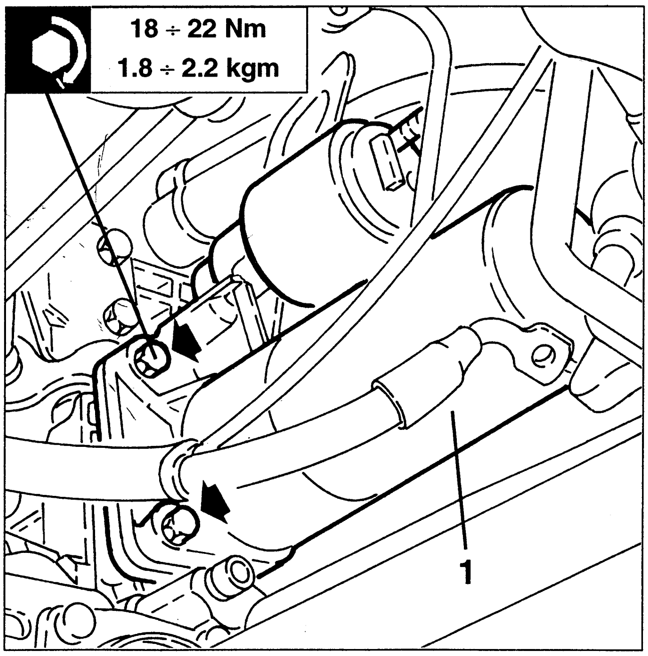

ALTERNATOR

When the engine is running the alternator supplies electric energy to the electronic control units and to the different services that may be activated at all times.
It also supplies the charge to the battery, for dlivering current when the engine is not running.
The electric current is produced by a stator which "cuts" the magnetic field generated by a rotary winding (rotor). The rotor is integral with a pulley operated directly by the crankshaft through a belt. The contact brushes supply the rotor with energising current.
The alternate current generated by the alternator is rectified by the diodes and regulated by the voltage regulator, located on the body of the alternator.
The electronic voltage regulator used, which is compact in size, ensures a constant voltage in all the operating fields of the engine, with the highest number of changes in loadand speed.
A double internal cooling fan turns together with the pulley and allows the alternator to avoid reaching dangerous temperatures that would adversely affect it.
The alternator fitted is of the type with clawed poles with collector rings; it is extremely compact and light weight.
WARNING: The fan cools the alternator correctly if it turns clockwise (seen from the pulley side).

REMOVING/REFITTING

- Set the car on a lift.
- Remove the front wheels and mud flaps.

1. Using a wrench on the belt tensioner pulley screw, overcome the force of the automatic tensioner and lock it in this position (belt slack) inserting the special peg as illustrated.
2. Prise and remove the auxiliary components drive belt.

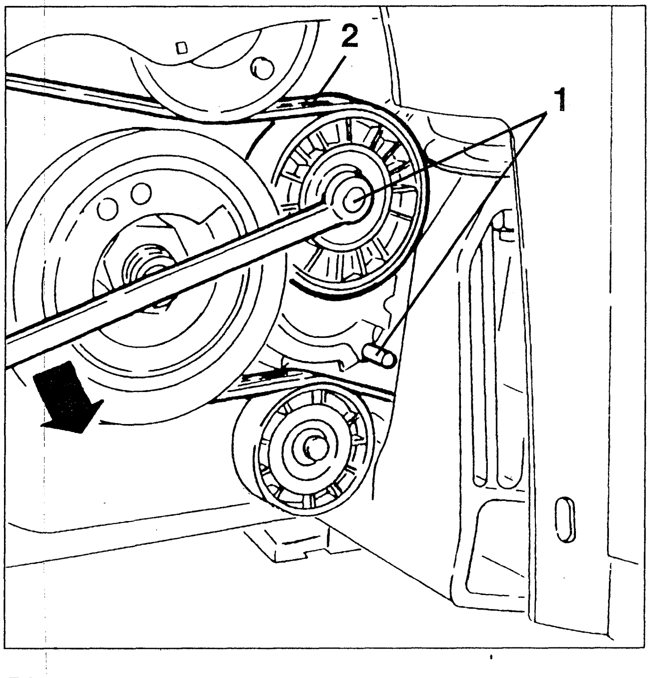

1. Slacken the fastening screw and remove the auxiliary components drive belt guide pulley.

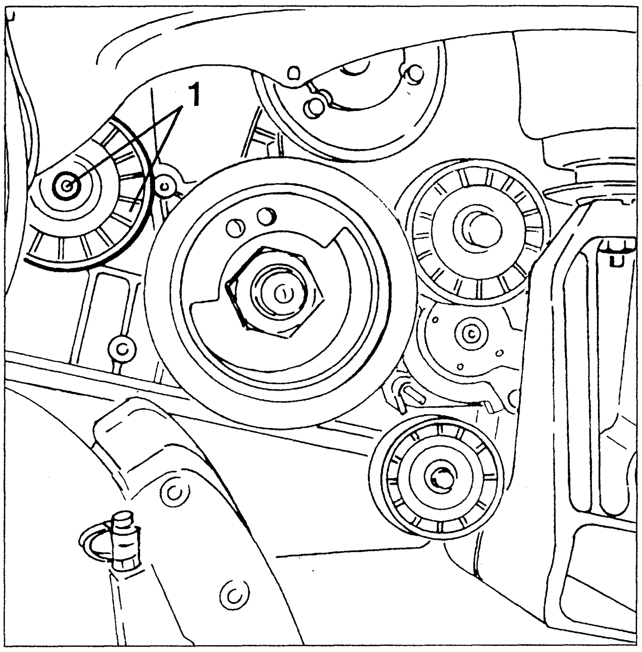

1. Lower the car and remove the plastic cover protecting the relays, fuses and electrical connections.

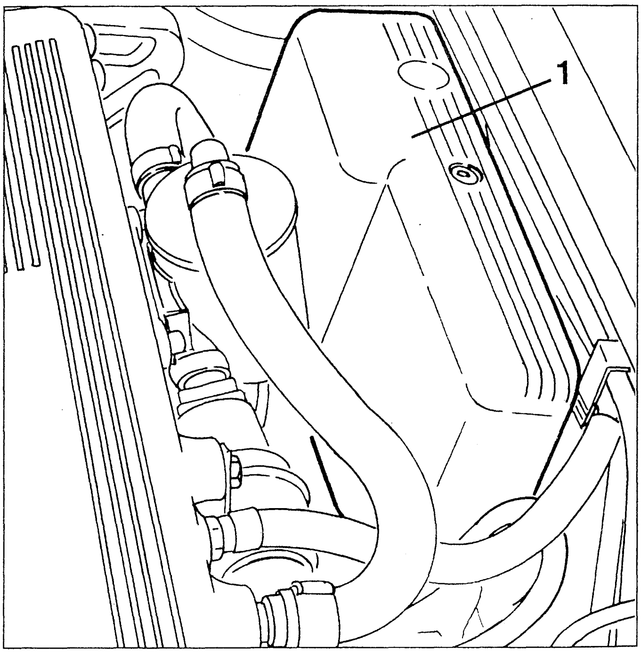

1. Slacken the fastenings and remove the heat guard.

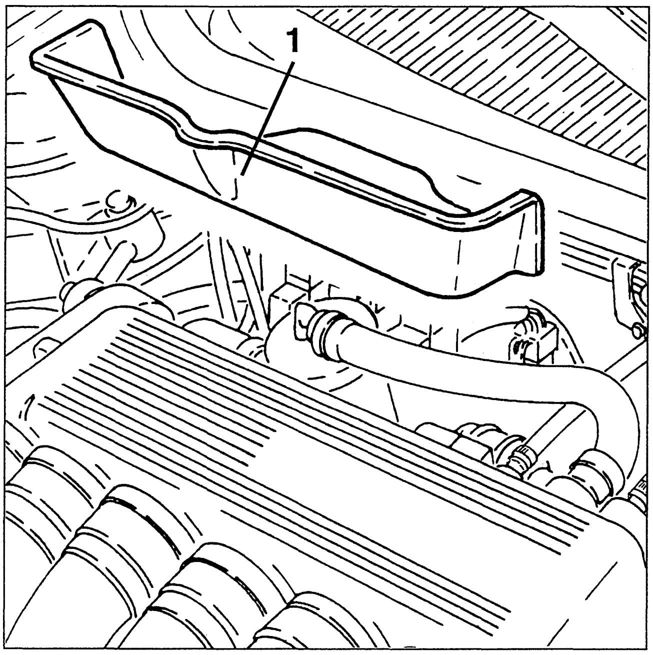

1. Slacken the upper screw fastening the alternator to the support bracket.

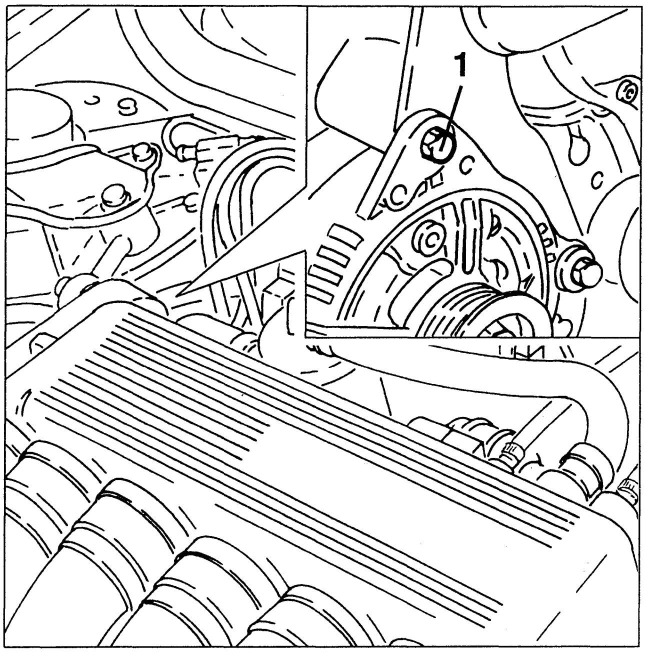

1. Install a special engine support bracket on the cylinder head.

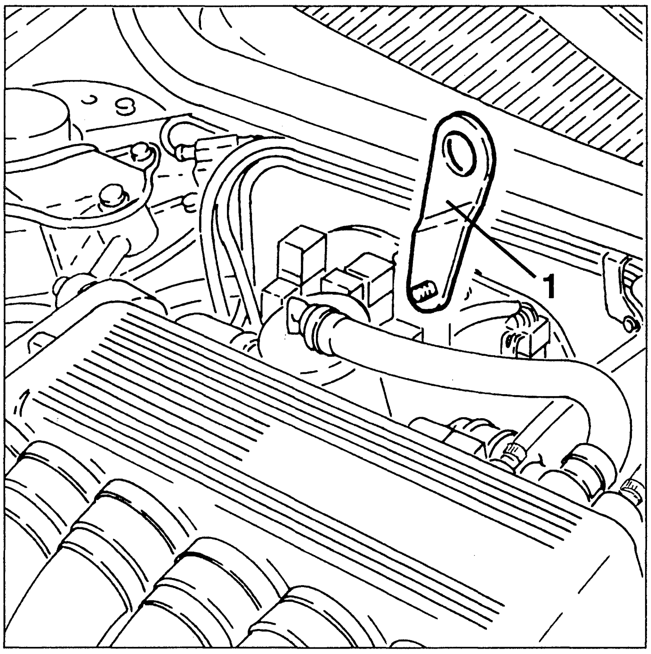

1. Install crossmember no. 1.820.581.000 (R.4.0194) complete with supports no. 1.820.239.000 for supporting the power unit.

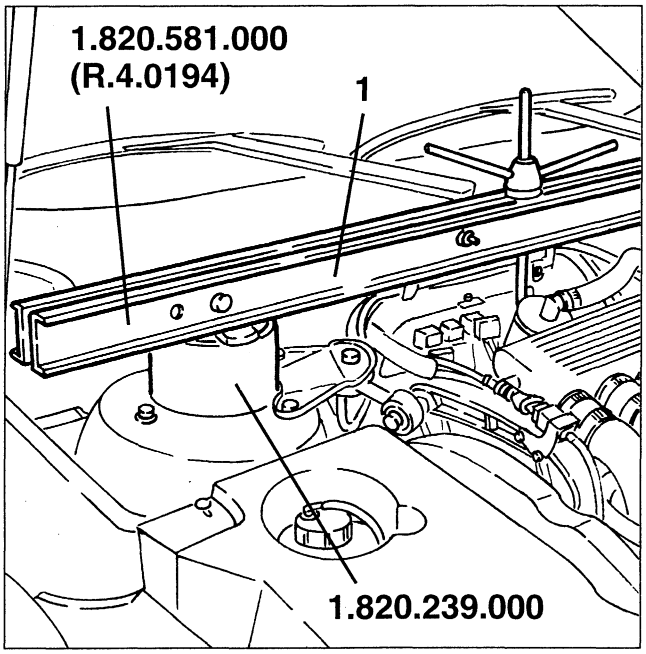

1. Raise the car and remove the front section of the exhaust pipe.

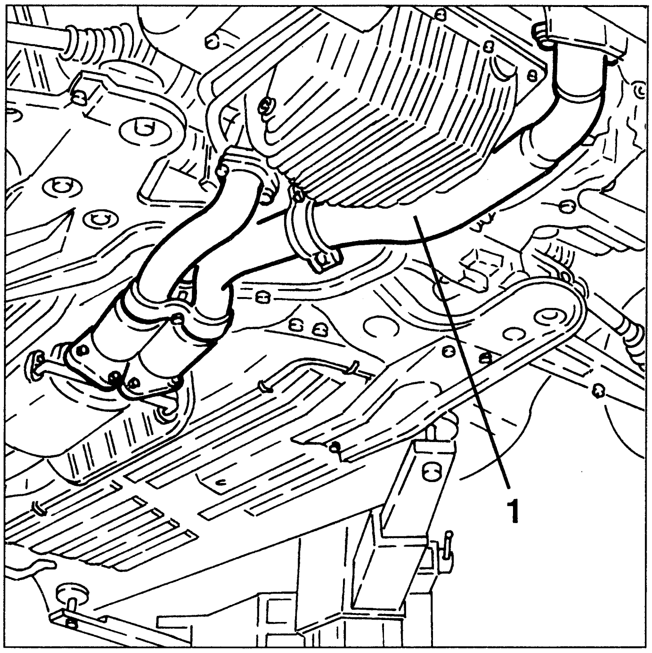

1. Slacken the fastenings and remove the heat guard of the power steering box.

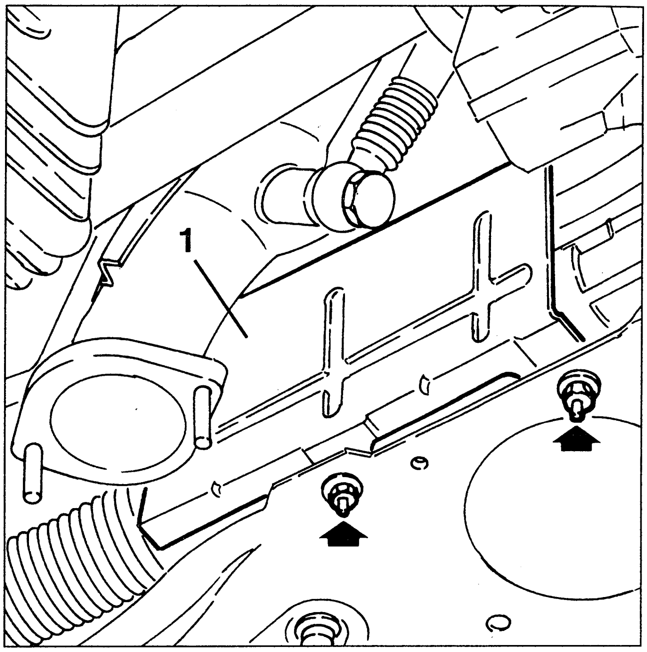

1. Position a hydraulic jack under the gearbox as illustrated.
2. Slacken the fastening screws and remove the rear power unit support.

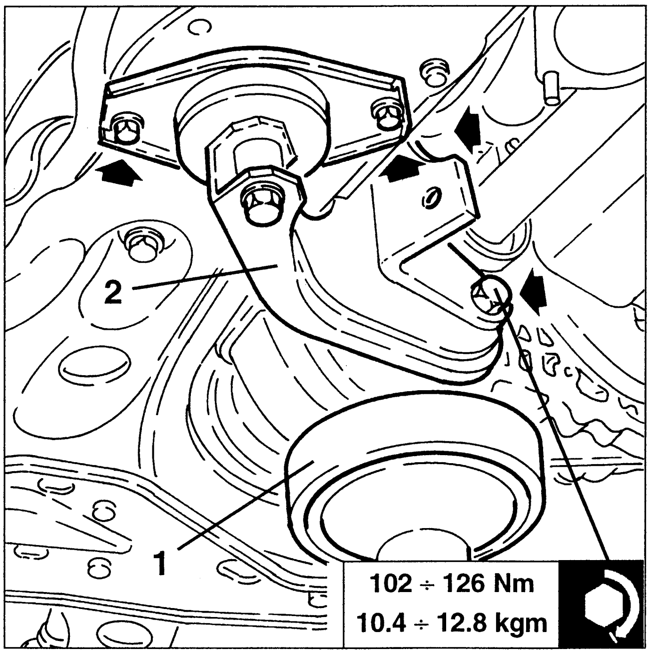

102 ÷ 126 Nm
10.4 ÷ 12.8 kgm

1. Slacken the bolts fastening the wishbones to the wheel uprights.

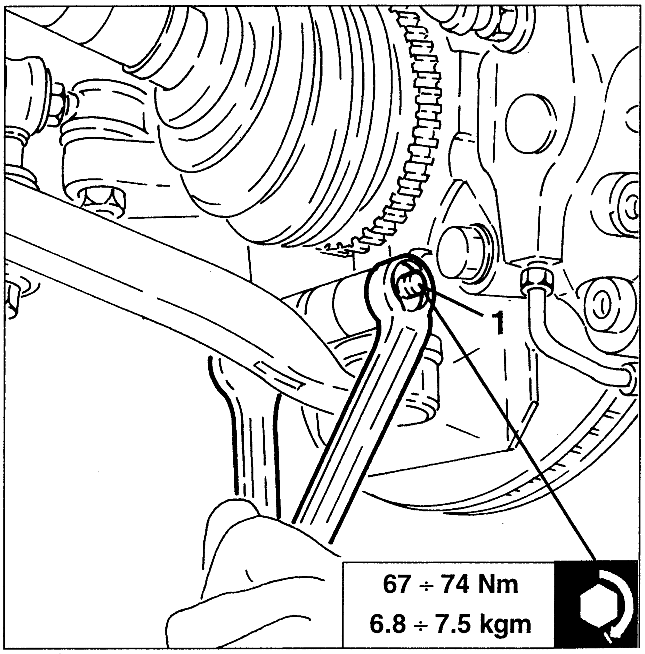

67 ÷ 74 Nm
6.8 ÷ 7.5 kgm

- Using a hydraulic jack support the crossmember using tool no. 1.860.978.000.

1. Slacken the screws and nuts fastening the crossmember, then remove it complete with wishbones, stabiliser bar and reinforcements.

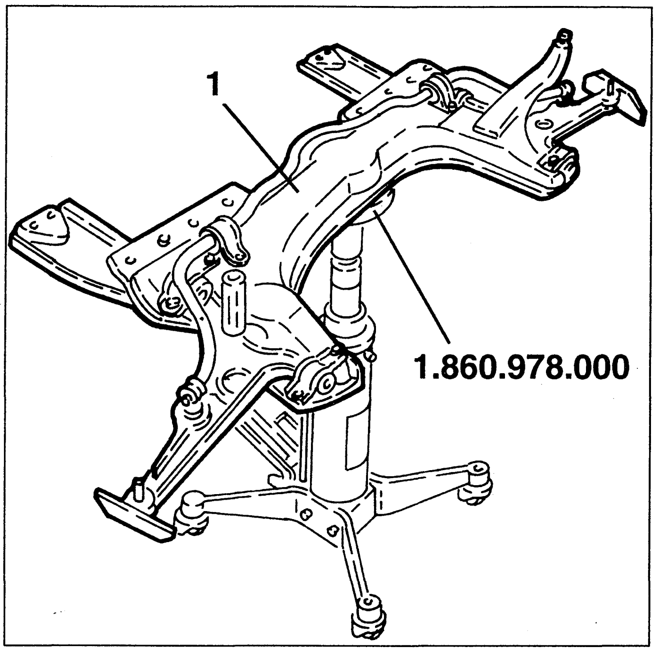

1. Slacken the lower alternator fastening screw.

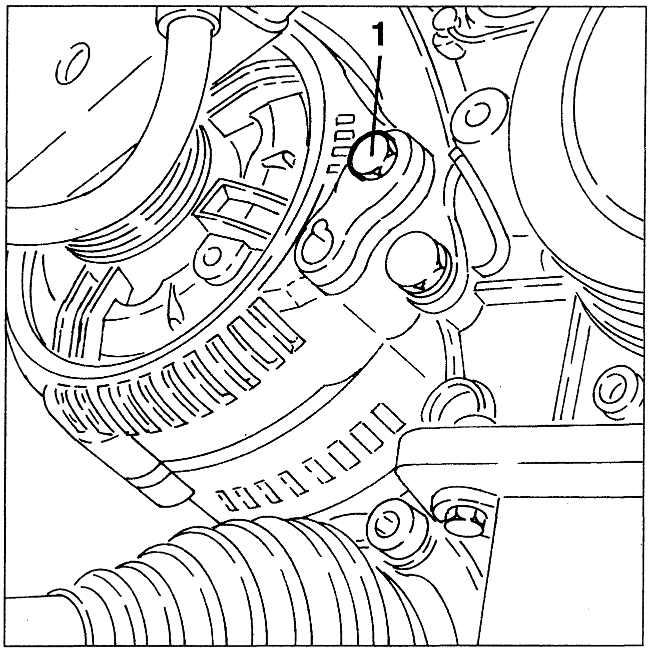

1. Disconnect the electrical connections from the alternator.

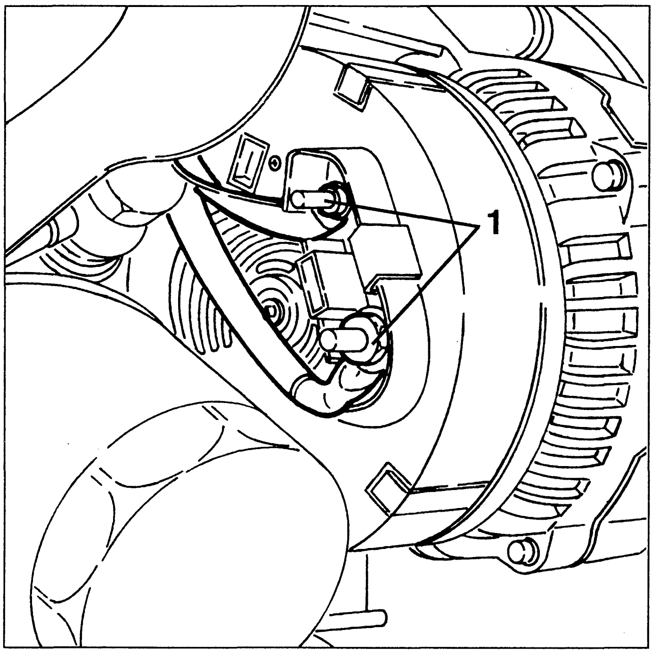

1. Remove the alternator releasing it from its support bracket.

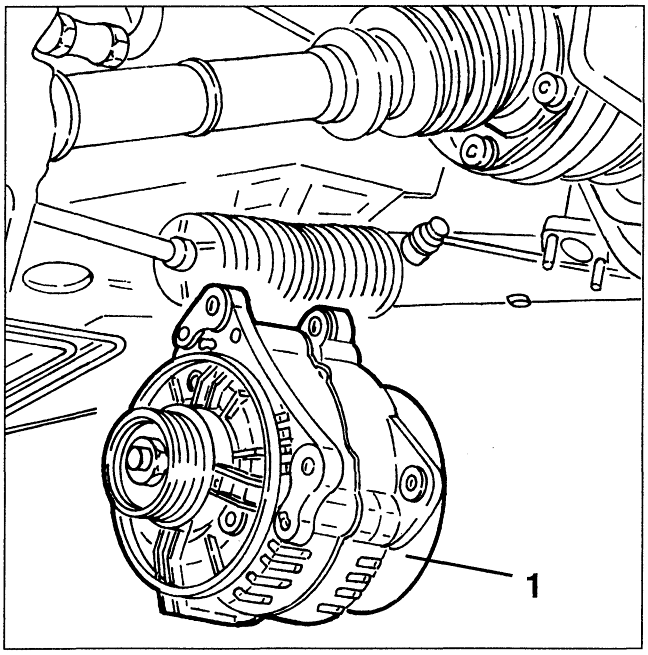

AIR BAG AND PRETENSIONERS

DRIVER'S AIR BAG

REMOVING/REFITTING

☒
- **Before working on the system, closely follow the RULES OF SAFETY given in "Group 55 - ELECTRIC SYSTEM DIAGNOSIS", Section "Air Bag and pretensioners".**
  In particular disconnect both battery terminals, isolate them accurately and wait for 10 minutes before starting to work.
- **If necessary carry out system diagnosis using the ALFA TESTER, disconnect the Air Bag module and replace it with the special dummy resistance (see "Group 55 - ELECTRIC SYSTEM DIAGNOSIS" - Section "Air Bag and Pretensioners").**

1. Slacken the three screws fastening the Air Bag module to the steering wheel.
(N.B. a special Torx wrench should be used).
2. Working with care, disconnect the electrical connection and remove the module.

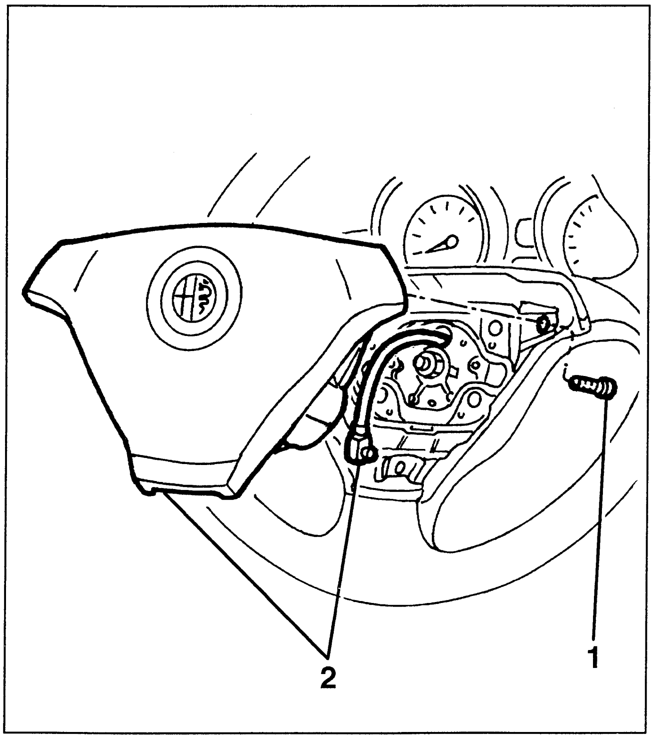

CLOCK SPRING DEVICE

REMOVING/REFITTING

☒ **Also for the clock spring device it is necessary to closely follow the RULES OF SAFETY given in "GROUP 55 - ELECTRIC SYSTEM DIAGNOSIS", Section Air Bag and Pretensioners".**

– Remove the Air Bag module.
1. Remove the steering wheel centre fastening nut.

NOTE: before carrying out this operation make sure that the wheels are perfectly straight.

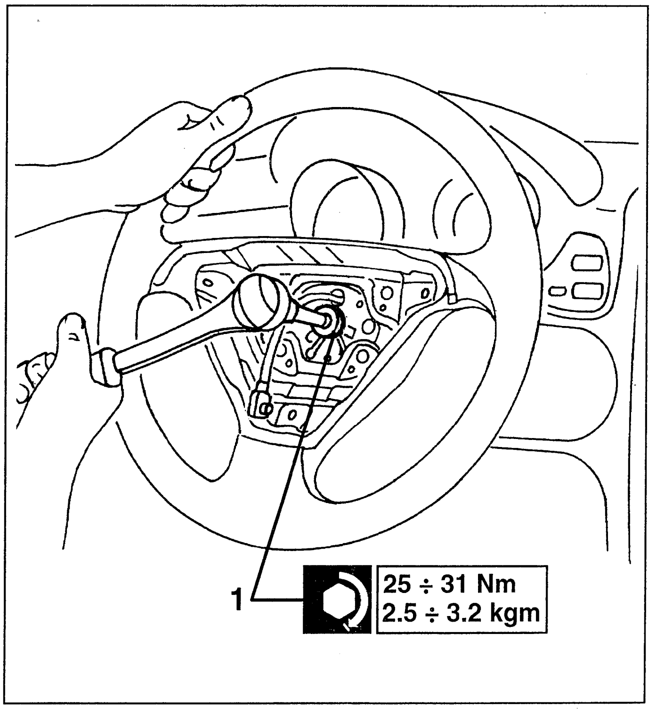

1. Using tool no. 1.821.105.000 remove the steering wheel from the steering column.
2. Disconnect the connection of the clock spring.

WARNING:
During ths phase be very careful not to turn the clock spring with respect to the steering wheel because the device is locked only when it has been separated from the steering wheel (see next step). Therefore it is advisable to keep the clock spring cable on the steering wheel with adhesive tape for example.

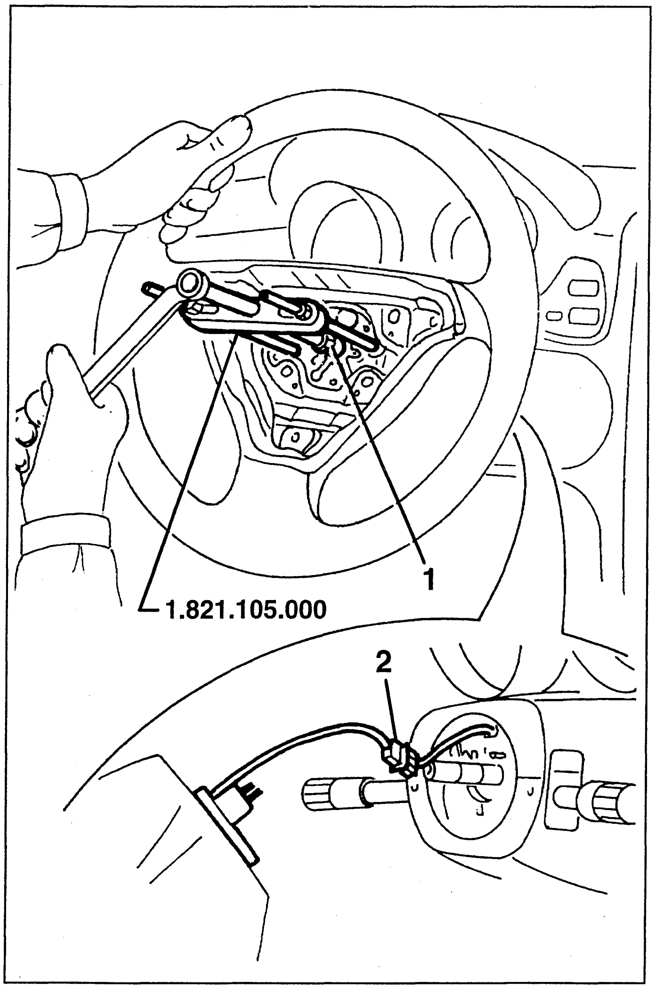

1. Disconnect the connections of the horns.
2. Slacken the two screws and remove the safety spring.
3. Slacken the three screws and remove the clock spring.

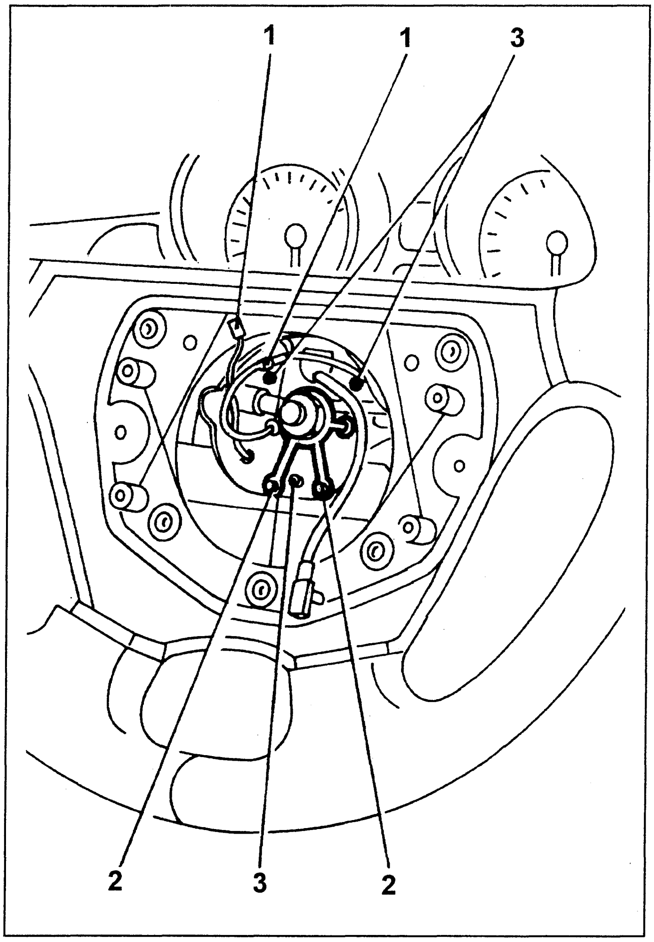

NOTE: After removing the safety spring, the clock spring is locked because the safety pin A comes out.

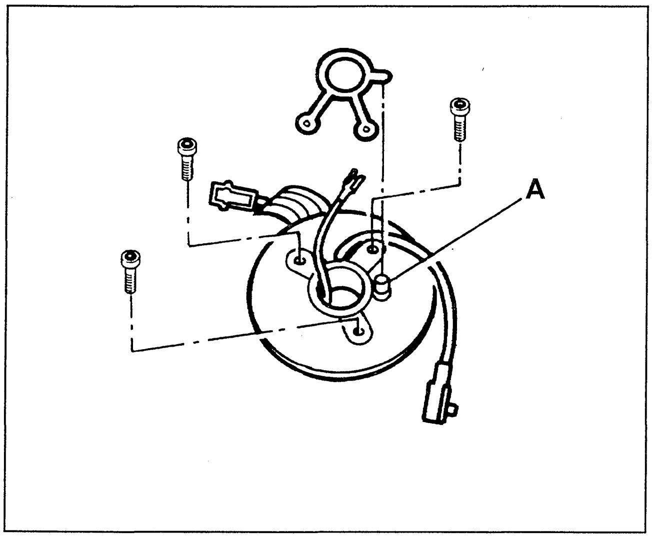

When replacing the clock spring with a **new** one, this is supplied already locked in the correct position by a clamp.
Fit it on the steering wheel as described previously, then remove the clamp and assemble the steering wheel on the steering column **after checking that the wheels are perfectly straight.**
With the device removed, if for any reason the upper plate turns with respect to the lower one - for example if the pin is pressed by accident - the exact position between the two plates is no longer known.
In this case turn the two plates to the end - pressing the pin - then rewind the cable for 3.5 turns: this position corresponds to half of the winding and makes it possible to assemble the device with the wheels perfectly straight.
When in doubt, replace the device.

ELECTRIC SYSTEM OF THE CAR - POWER SUPPLY

INDEX

(*) See the corresponding section of "Spider - Gtv - ELECTRIC SYSTEM DIAGNOSIS". For item involving the engine refer to the 3.0 V6 engine.

SUPPLY WIRING DIAGRAM

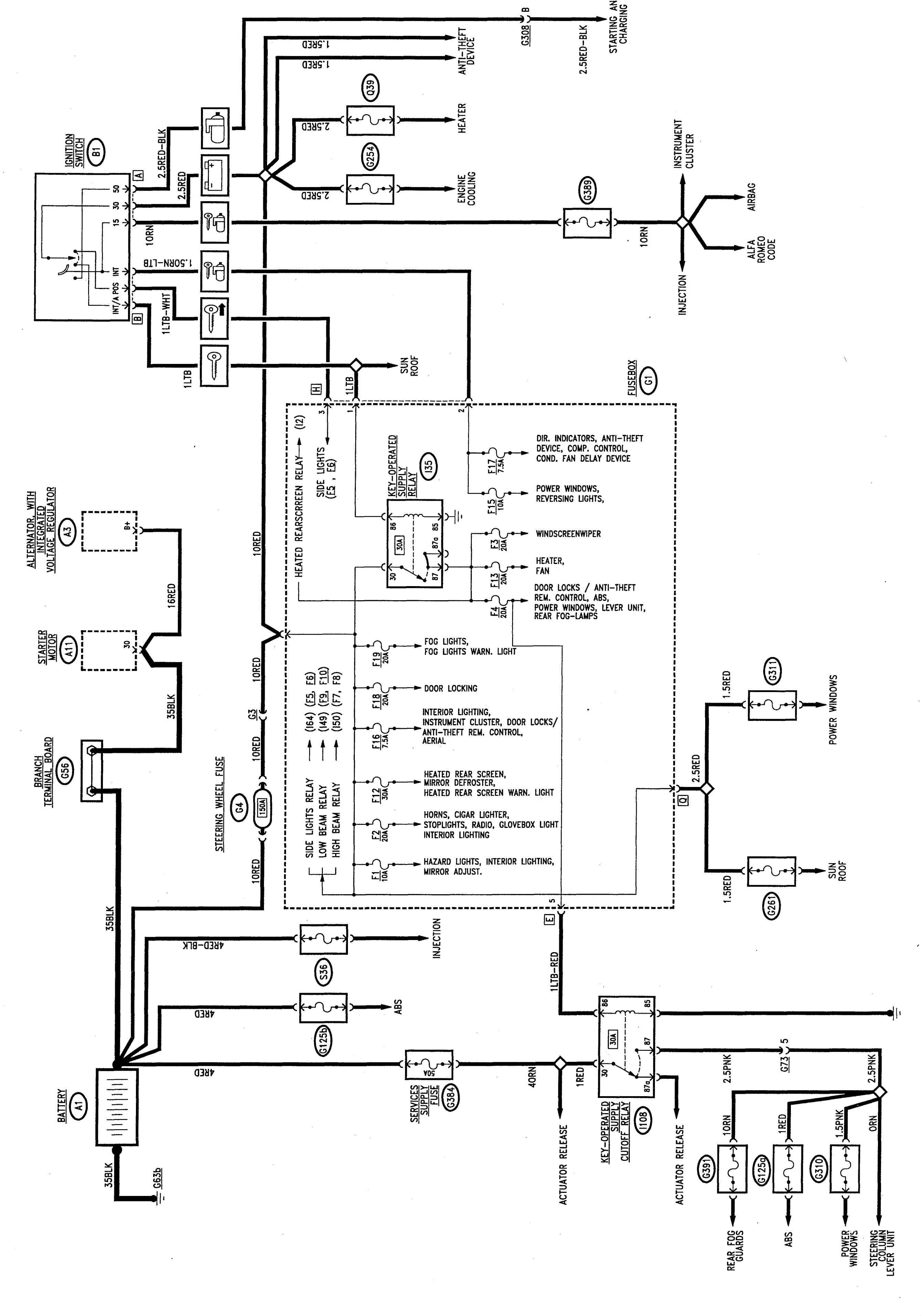

LOCATION OF COMPONENTS

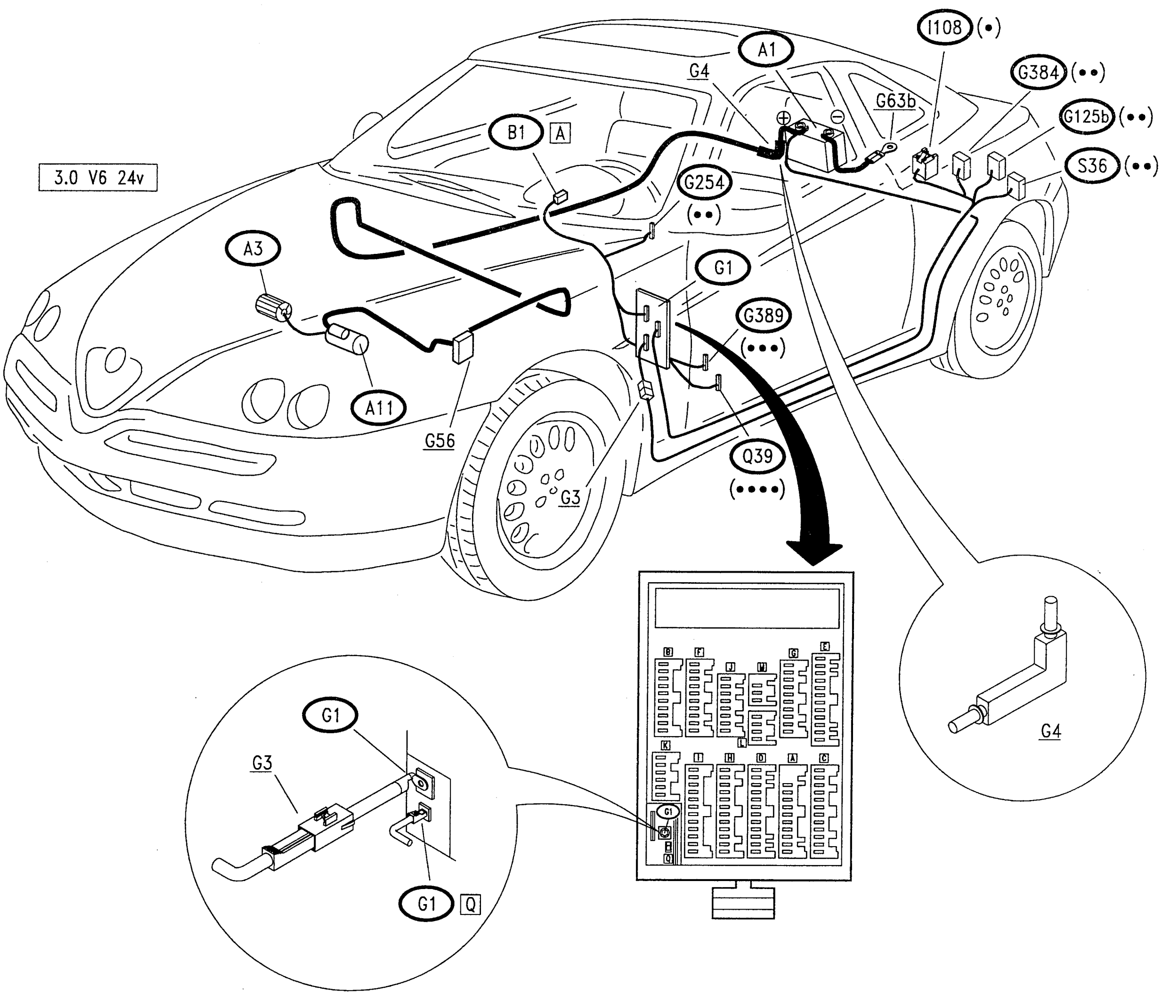

(•) Blue base
(••) Black fuseholder
(•••) Red fuseholder
(••••) Green fuseholder

LOCATION OF EARTHS

INDEX

GENERAL DESCRIPTION

The following diagrams show the different earths on the vehicle and the cable connected for each of them; each cable is marked with the circuits to which it refers with the components that is earthed through that line.

The earths shown are the following:

- **G53a** RH engine compartment earth
- **G53b** LH engine compartment earth
- **G55b** Earth on left wing (*)
- **G63b** LH rear earth (*)
- **G92** Earth for electric aerial (*)
- **G131** Erth on engine upper cover
- **G148b** Earth under LH dashboard (*)
- **G381** Earth for Airbag (*)

There is also an **earth braid**, which connects the power unit to the body.

NOTE: With these diagrams it is easy to locate the circuits which are connected to earth by the same line: this simplifies fault finding work in the case of problems involving more than one system: for example oxidation of an earth may put different circuits and many functions "out of service" at the same time.

(*) See the corresponding earth in the section "*Spider-Gtv* - ELECTRIC SYSTEM DIAGNOSIS".

WIRING DIAGRAMS

G53a

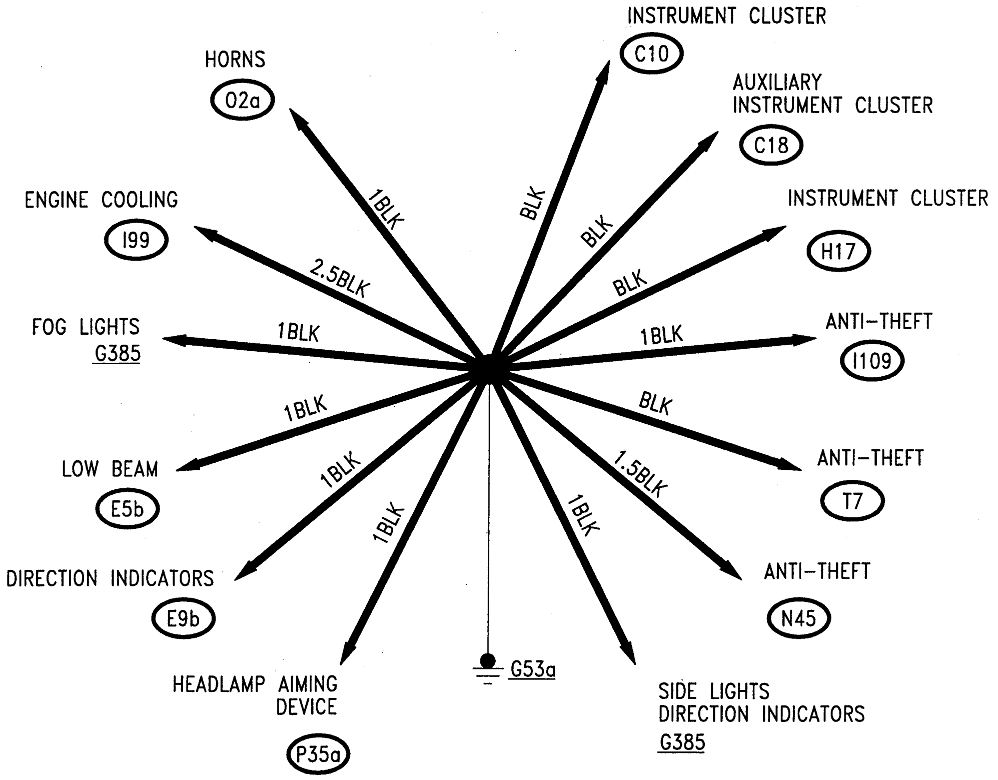

G53b

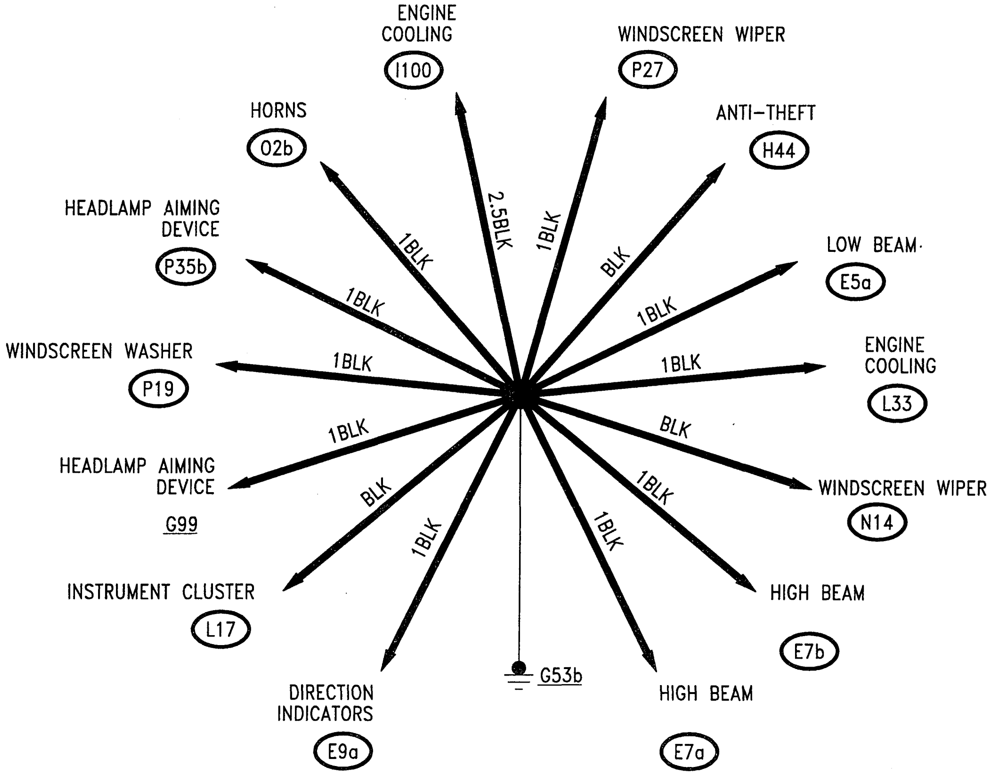

G131 (3.0 V6 24v engine)

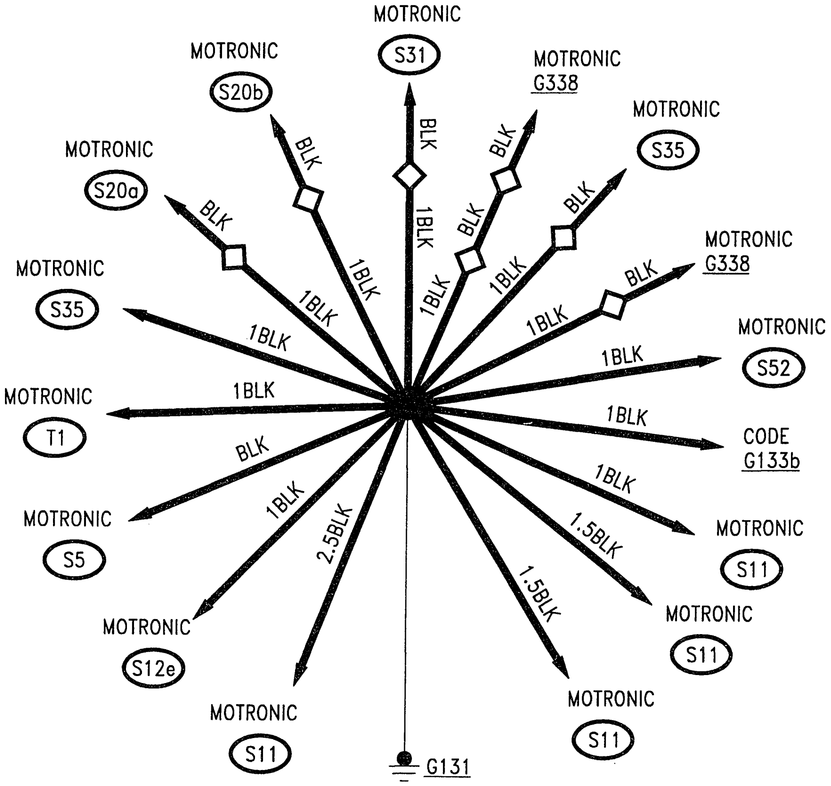

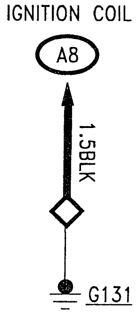

LOCATION OF EARTHS ON THE CAR

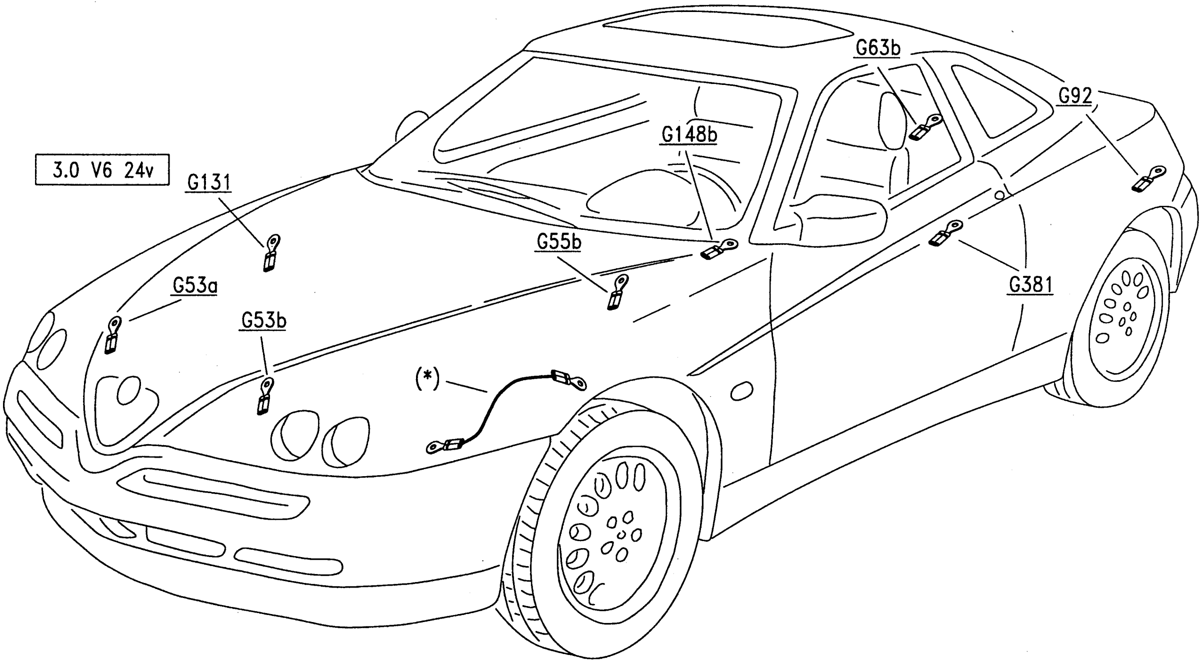

(*) **earth braid between gearbox and body**

FUSEBOX

INDEX

(*) See the corrresponding section of "Spider-Gtv - ELECTRIC SYSTEM DIAGNOSIS". For item involving the engine refer to the 3.0 V6 engine.

FUSEBOX

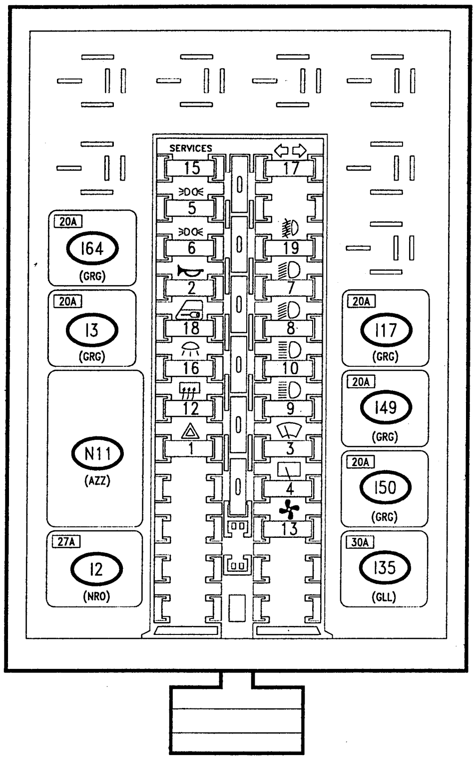

LOCATION OF FUSES AND RELAYS

RELAYS

I2	heated rearscreen relay
I3	horn relay
I17	fog lamp relay
I35	key-operated supply relay
I49	low beam relay
I50	high beam relay
I64	sidelights relay
N11	Door locking control unit

FUSES (see following page)

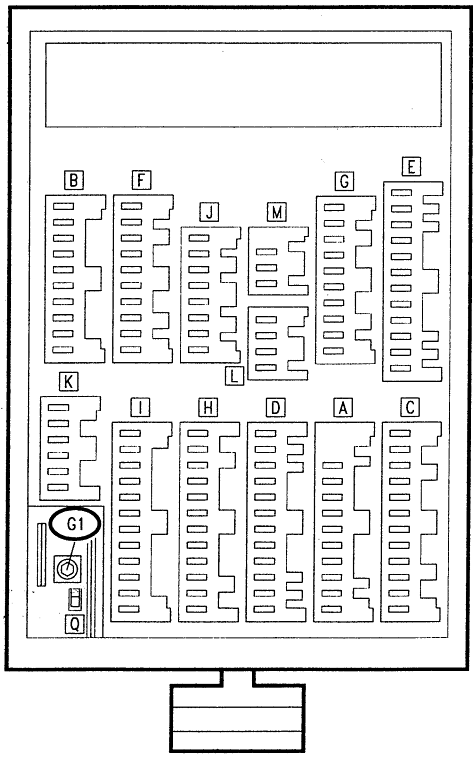

REAR VIEW, CONNECTOR SIDE

G1:
fusebox supply
Connector Q:
direct supply for other services
Connectors A,I:
Front wiring
Connectors B,D,F,G,H,L,M:
Dashboard wiring
Connectors C,E:
Rear wiring
Connector K:
provision for trailer
Connector J:
provision for bridge for specific regulations (daylights, fog lights, etc..)

FUSES

FUSE			SUPPLY	SERVICES PROTECTED
SIMBOLO	N°	AMP.		
⚠	1	10A	🔋	Hazard warning lights, roof lamps, Door mirror adjustm.
📯	2	20A	🔋	Horns, cigar lighter, stop lights, radio, gtlove box light, roof lamps
	3	20A	🔑 I35	Windscreen wiper
	4	20A	🔑 I35	Door lock/alarm remote control, ABS, power windows, lever unit supply, rear fog guards
	5	10A	I64	Cluster lighting, controls lighting, LH rear sidelights, RH no. plate light, RH front sidelight, headlamp aiming device
	6	10A	I64	Controls lighting, RH rear sidelight, LH no. plate light, LH front sidelight, sidelights warning light
	7	10A	I49	RH low beam
	8	10A	I49	LH low beam
	9	10A	I50	RH high beam
	10	10A	I50	LH high beam, high beam warning light
	11	--		NOT USED
	12	30A	🔋	Heated rearscreen, mirror defroster, rearscreen/defroster warning light
	13	20A	🔑 I35	Heater, fan
	14	--		NOT USED
SERVICES	15	10A		Power windows, reversing lights
	16	7.5A	🔋	Front roof lamp and boot light, instr. cluster, door locking remote control, electric aerial
⇦ ⇨	17	7.5A		Direction indicators, alarm control unit, compressor control, engine fan control
	18	20A	🔋	Door locking device
	19	20A	🔋	Fog lamps, fog lamp warning light

LOCATION OF FUSES AND RELAYS IN THE CAR

This page shows the location in the car of all the fuses and relays which are not to be found in the fusebox.

The fuses and relays may be distinguished by the colour of the base (fuse holder or relay holder) which connects them to the wiring, as specified in the following tables.
In addition to the colour of the base, it is at all events wise to check the exact location of a relay or fuse by the colour of the wires that converge on it (for thes, see the corresponding wiring diagram).

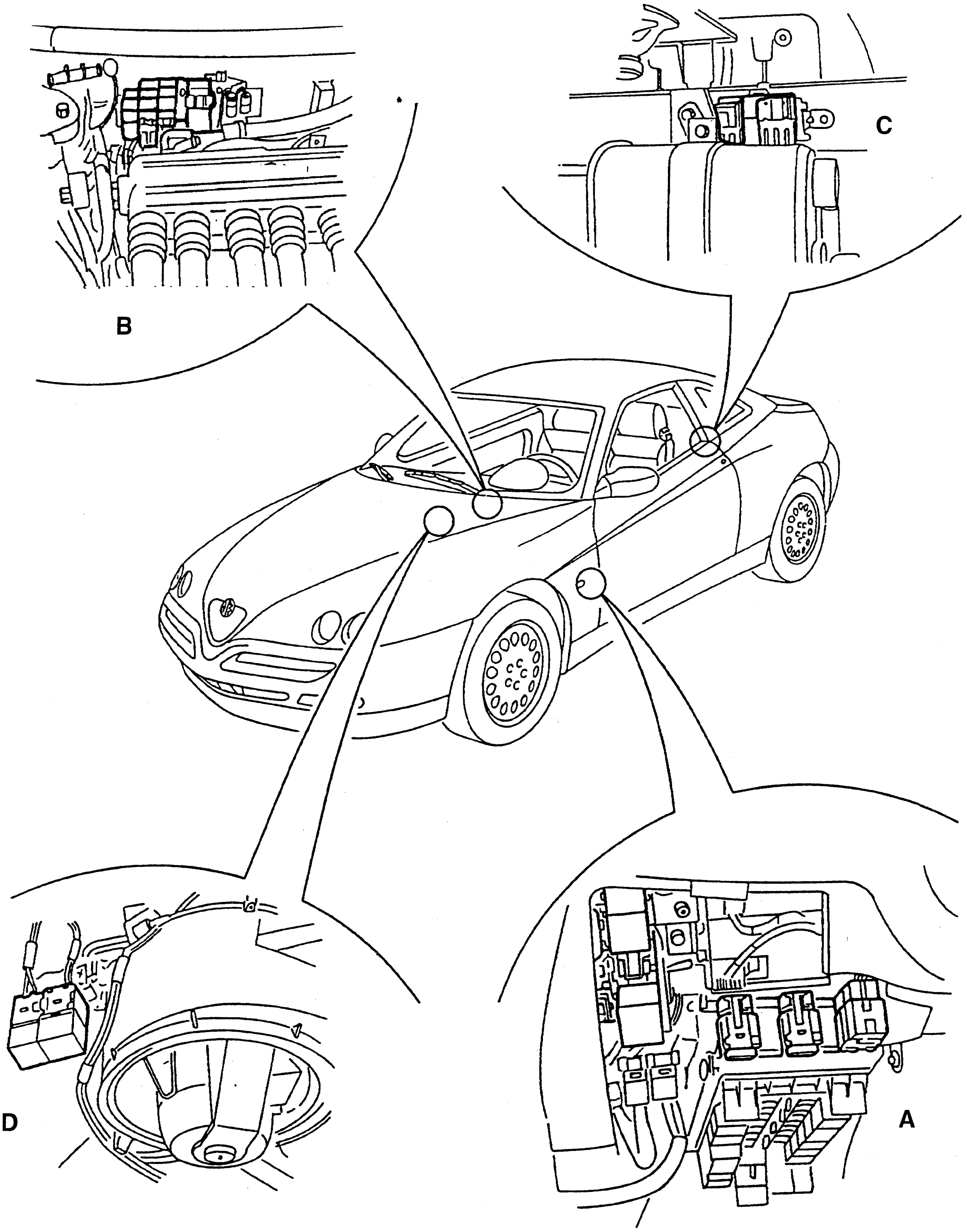

FUSES AND RELAYS ON THE AUXILIARY BRACKET (see position A)

A set of fuses and relays is located on an auxiliary bracket (not removable) at the left of the main fusebox; next to this there is also the power window control unit **N38**, the electronic key control unit **N77** and the windscreen wiper electronic device **N14**.

COMPONENT	AMP.	CODE	COLOUR BASE
roof lamp relay	20A	**I26**	Green
Hazard warning light and direction indicator intermittence	-	**N13**	Black
Rear fog guard device	-	**N25**	White
Engine cooling fan 1st speed relay	30A	**I99**	Yellow
Engine cooling fan 2nd speed relay	50A	**I100**	Black
Sunroof relay relay	30A	**I58**	Red
ABS fuse	10A	**G125a**	Black
power window fuse	25A	**G311**	White
RH power window fuse	25A	**G310**	White
Sunroof fuse	30A	**G261**	Green
Rear fog guard fuse	7.5A	**G391**	Brown
ALFA ROMEO CODE control unit fuse	10A	**G389**	Red
Air conditioning system wander fuse	30A	**Q39**	Green
Engine cooling fan delaying device	-	**Q42**	White

FUSES AND RELAYS IN THE ENGINE COMPARTMENT (See position B)

There is a set of fuses and relays in the engine compartment on the services tray partition.

COMPONENT	AMP.	CODE	COLOUR BASE
Alarm switch relay	20A	**I109**	Red
Engine fan fuse	50A	**G254**	Black
Main relay	30A	**S41**	Grey
Air flow meter relay	30A	**S12e**	Black
Fuel pump relay	30A	**S12a**	Black
Fuel pump fuse	15A	**S47**	Blue
Control unit supply fuse	7.5A	**S46**	Purple
Compressor control relay	20A	**Q22**	Grey
Compressor auxiliary relay	20A	**Q32**	Grey

FUSES AND RELAYS ON REAR BRACKET (See position C)

A set of fuses and relays is located in the luggage compartment on a special bracket.

COMPONENT	AMP.	CODE	COLOUR BASE
Boot opening relay	20A	**I52**	Green
Fuel flap opening relay	20A	**I53**	White
Key-operated supply cut off relay	20A	**I108**	Blue
Services supply fuse	40A	**G384**	Black
ABS supply wander fuse	60A	**G125b**	Black
Injection wander fuse	40A	**S36**	Black

RELAYS ON HEATER/AIR DISTRIBUTOR UNIT (See position D)

COMPONENT	AMP.	CODE	COLOUR BASE
Climate control fan relay	30A	**Q15**	Yellow
Climate control fan 1st speed relay	30A	**Q69**	Brown

STOP AND REVERSING LIGHTS

INDEX

(*) See the corresponding section of "Spider - Gtv - ELECTRIC SYSTEM DIAGNOSIS". For item involving the engine refer to the 3.0 V6 engine.

WIRING DIAGRAM

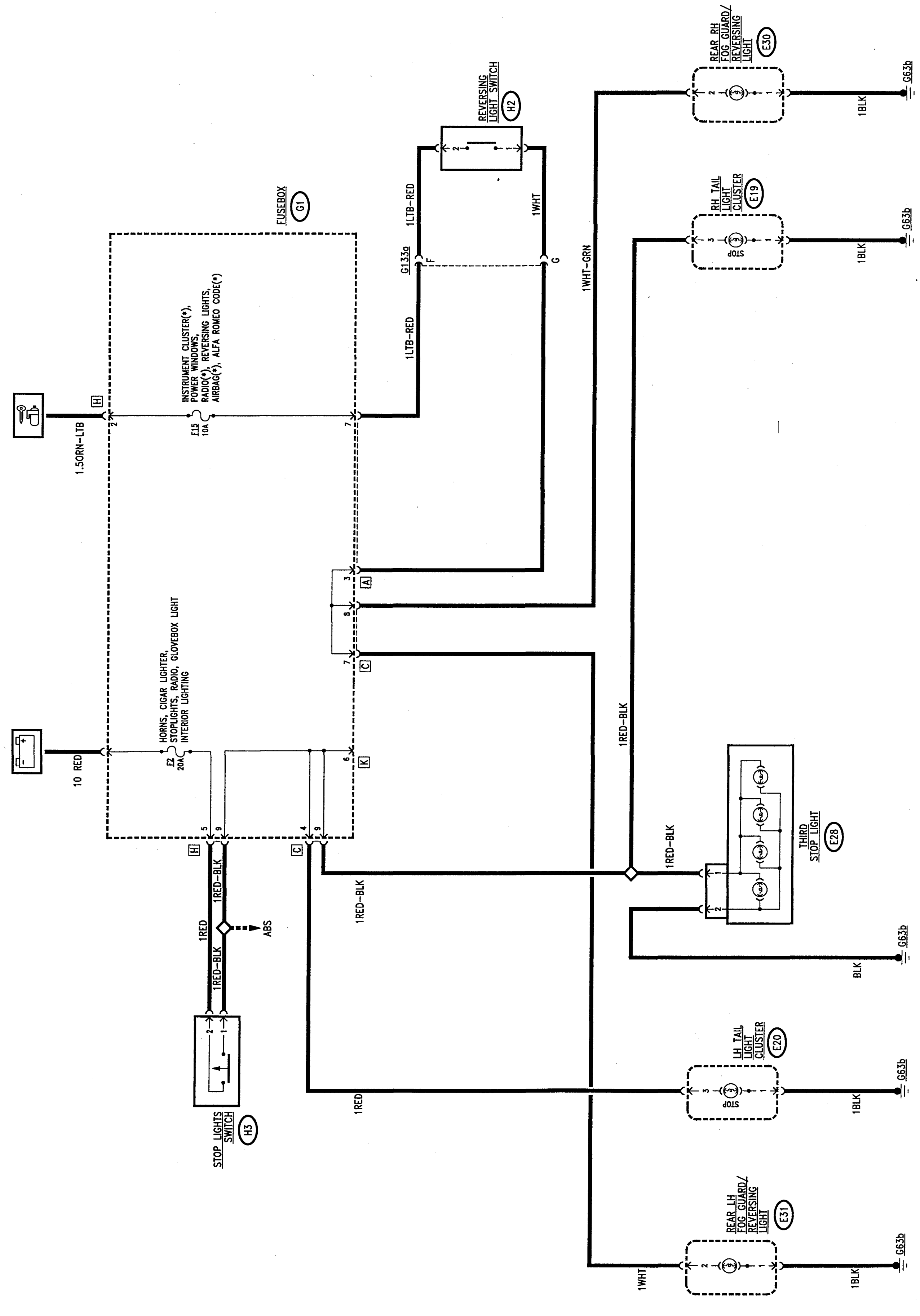

LOCATION OF COMPONENTS

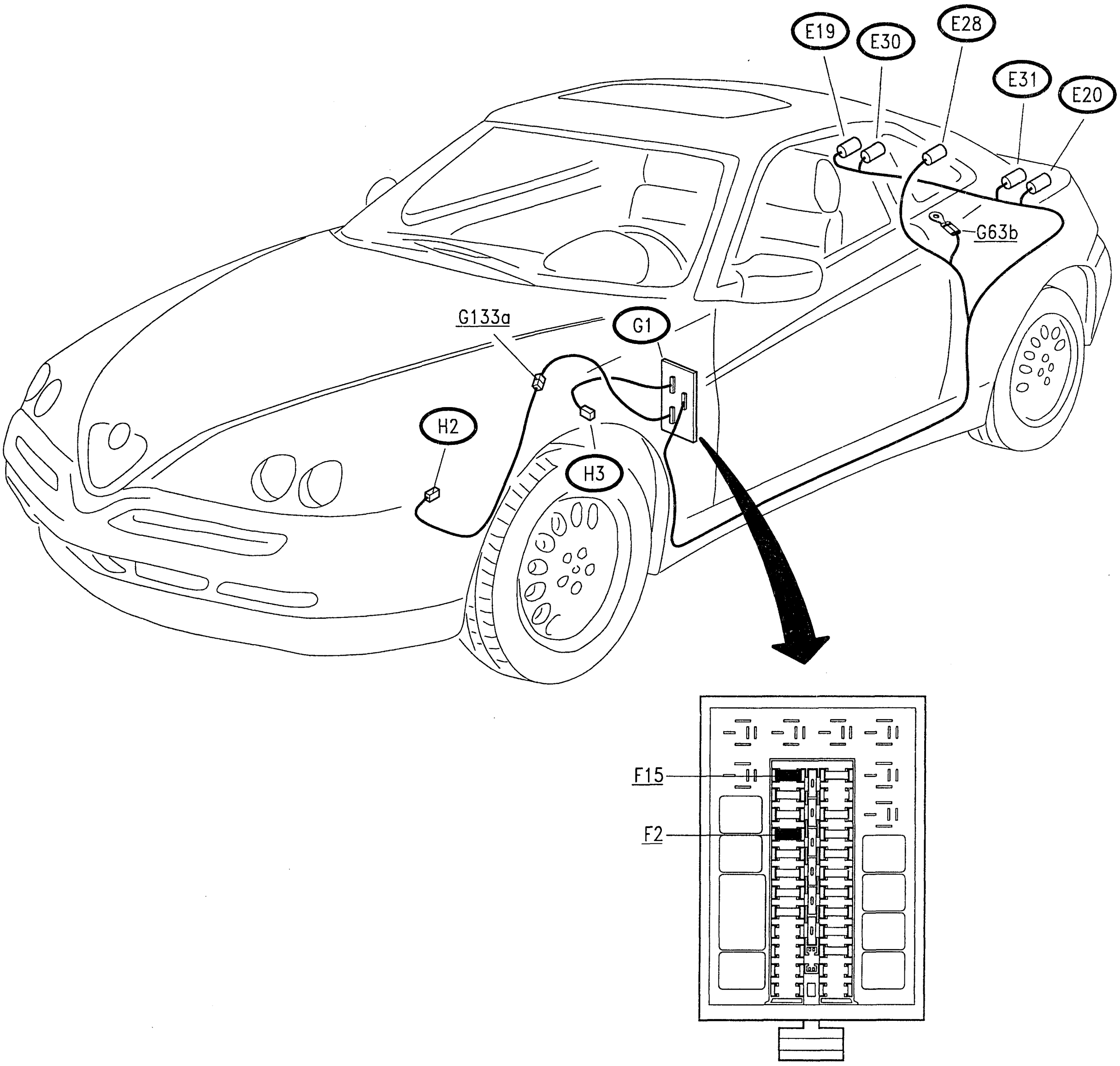

INDICATORS AND WARNING LIGHTS

INDEX

(*) See the corrresponding section of "Spider-Gtv - ELECTRIC SYSTEM DIAGNOSIS". For item involving the engine refer to the 3.0 V6 engine.

AUXILIARY INSTRUMENT CLUSTER: INDICATORS AND WARNING LIGHTS

The auxiliary cluster **C18** contains two indicators with corresponding warning lights.

The **temperature of the engine coolant fluid** is continuously displayed by the special analogue indicator, while high temperature is indicated by the "**maximum coolant tenperature**" warning light " 🌡.

The engine coolant temperature transmitter and maximum temperature warning light contact **L10** is fitted on the engine head and comprises a thermistor which generates a signal proportionate with the temperature of the fluid and a contact that closes to earth when the temperature of the fluid gets too high. The first signal is sent to the cluster **C18** at pin 5, and the second to pin 14.

The **fuel level** transmitter **L9** is a sensor submerged in the fuel tank and its resistance changes as the level in the tank changes.
An earth signal reaches pin 1 of **L9**, while a signal proportionate with the level is sent from pin 2, through the fusebox **G1**, to the cluster **C10**, to pin 7 of connector A.
Inside the cluster **C10** an electronic device processes this signal and sends two pieces of information to cluster **C18**: the first proportionate with the **level**, from pin 13 of connector B of **C10** at pin 6 of **C18**; the second concerning the "**riserve**" from pin 18 of connector B of **C10** at pin 8 of **C18** ⛽ .

Wiring diagram

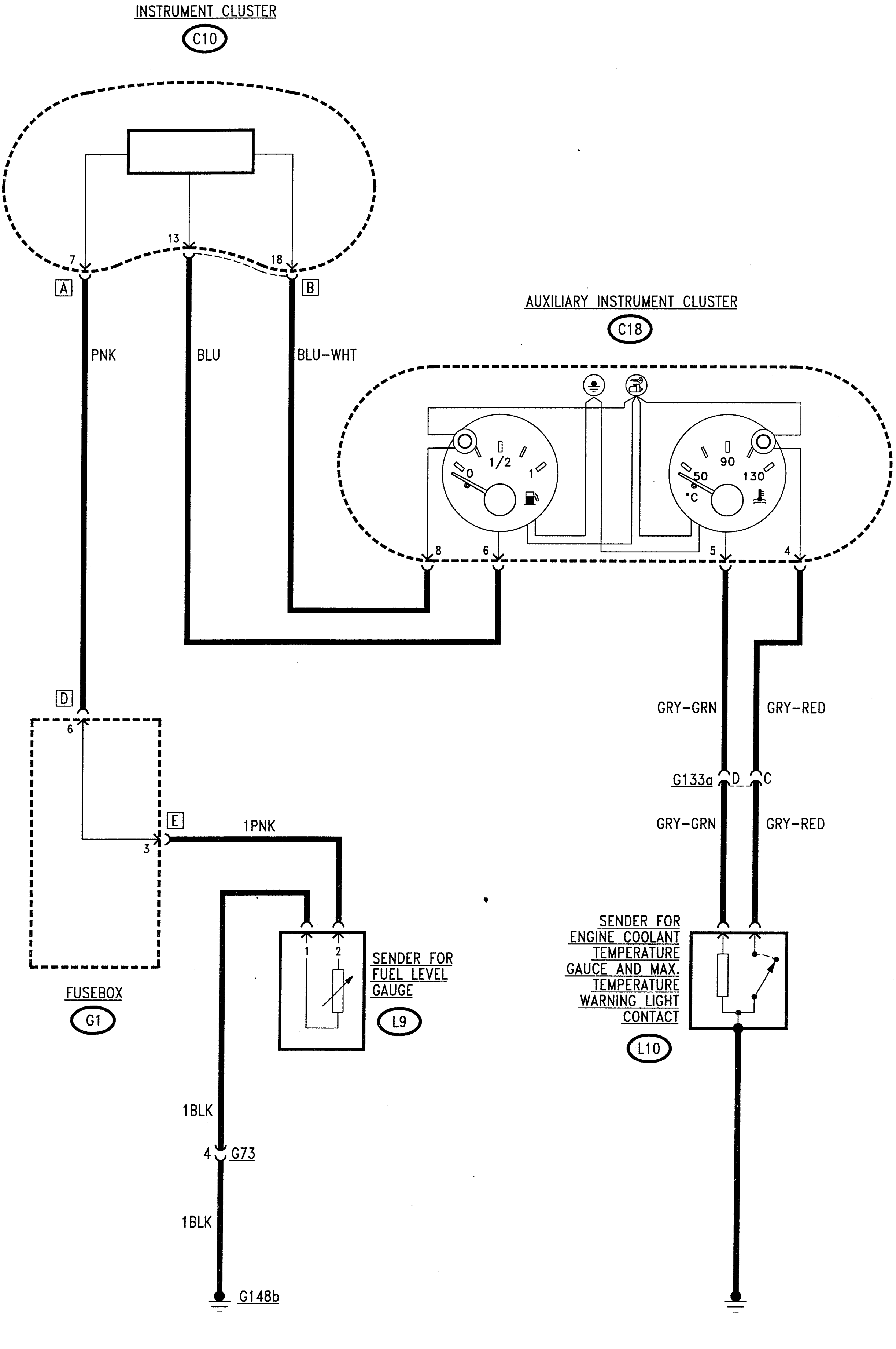

LOCATION OF COMPONENTS

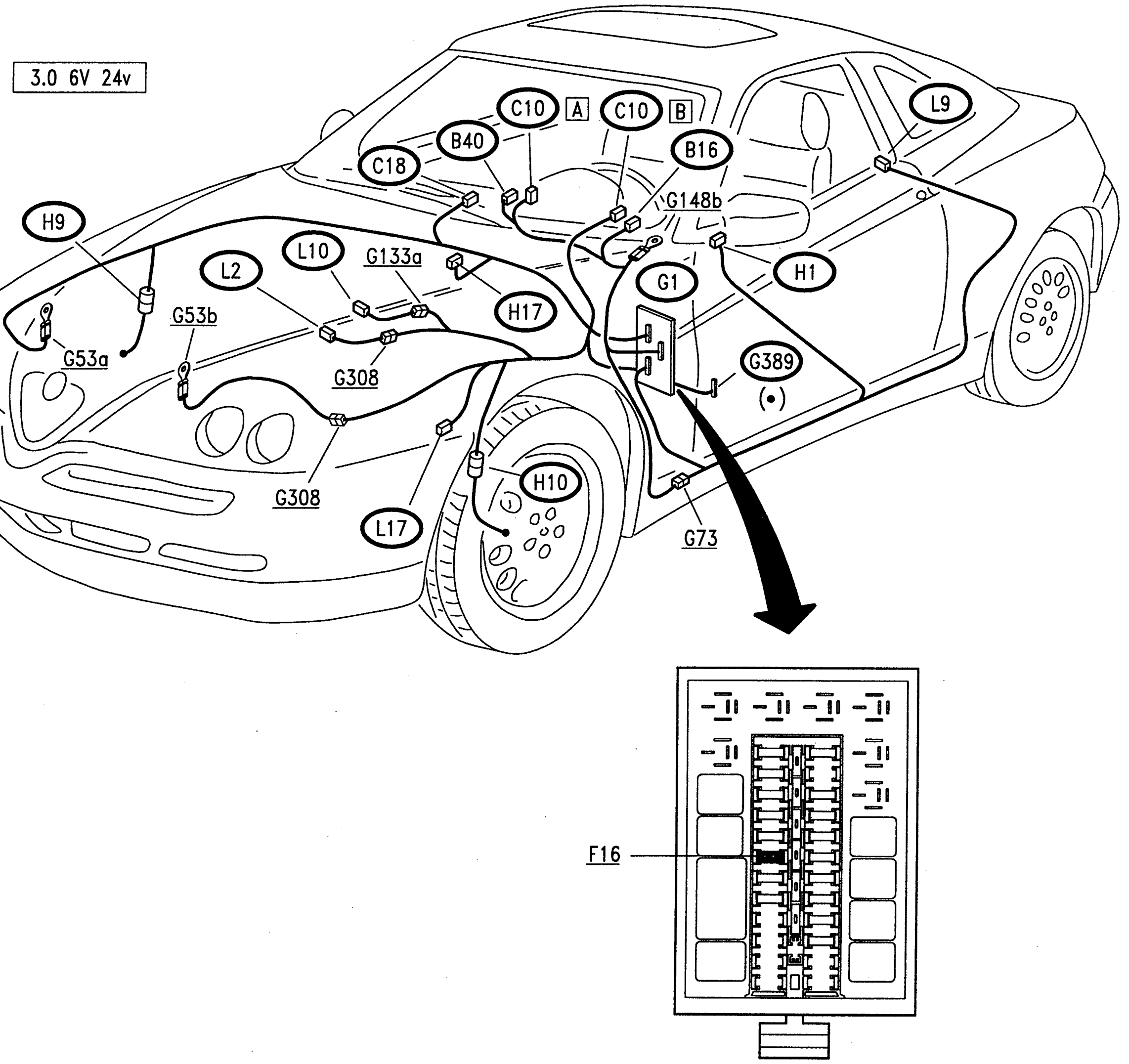

(•) Red fuseholder

CHECK COMPONENTS

Transmitter for engine coolant temperature gauge and max. temperature warning light contact (L10)

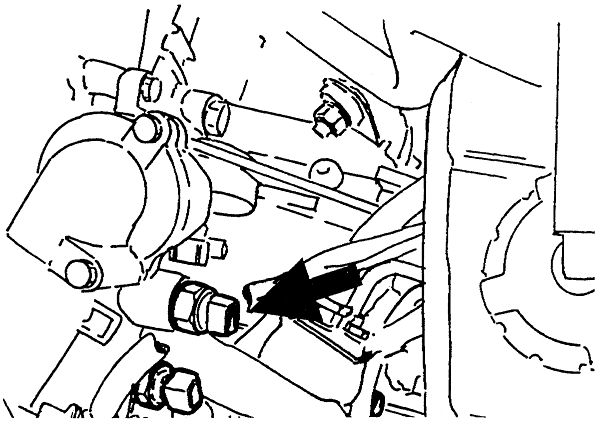

SPECIFICATIONS		
Transmitter		
Temperature °C	Resistance Ω	Type of test fluid
60	525 ÷ 605	Water
90	195 ÷ 215	Water
120	82 ÷ 94	Glycerine
Contact		
Contact closes	115 ± 3°C	
Contact opens	≥ 102°C	

Engine oil min. pressure contact (L2)

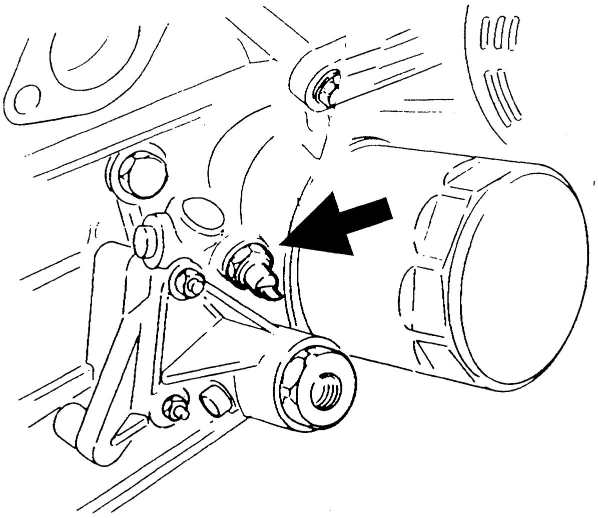

SPECIFICATIONS	
Contact closes (pressure falling)	0.15 ÷ 0.35 bar
Contact opens (pressure rising)	0.15 ÷ 0.35 bar

CLIMATE CONTROL:
AIR CONDITIONER

INDEX

GENERAL DESCRIPTION

The system with manually operated air conditioner integrates the simple but functional heater with the function of producing cold, dehumidified air obtained by engaging the compressor and the cooling system.

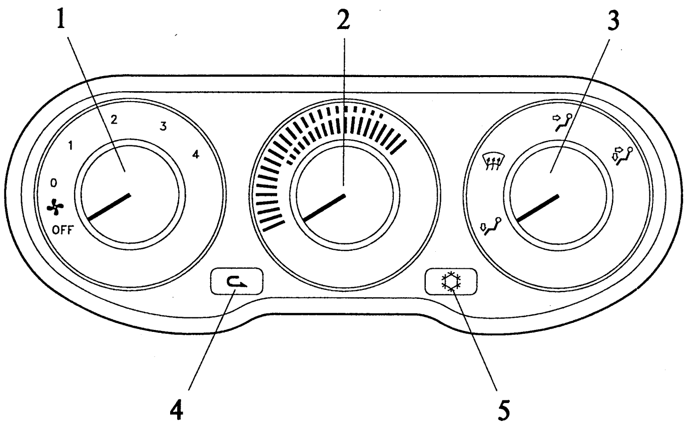

The control unit on the dashboard comprises three knobs and two push-buttons:

- the left hand knob (1) - operates - mechanically through a bowden cable - firstly opening of the ports which adjust the flow of air:
  - OFF: air inlet shut off
  - 0: inlet of outside air without fan (dynamic air)
  - from 1 to 4: a switch is controlled electronically which turns on the fan through a regulator with four speeds. The regulator and its resistor are fitted on the duct near the fan.
    NOTE: the fan can only be turned on with the ignition key turned.
- the centre knob (2) mechanically operates the mixing port between warm air (red) and cold (blue); when turned completely to the left, it cuts off the radiator closing a special tap.
  NOTE: the heater comprises a heat exchanger which exploits the engine coolant fluid to release heat to the air that is sent to the passenger compartment: in fact it is supplied by a special pipe of the engine cooling circuit.
- the right knob (3) adjusts the distribution of the flow, acting on the distribution ports, still by mechanical transmission, sending the air into the passenger compartment in the directions shown on the pictograms.
- the special button (4) controls the engagement of the "recirculation" function, by operating a motor which closes the outside air duct port and at the same time opens the air duct for recirculation from inside the passenger compartment.
  (The recirculation function makes it possible to withdraw the air to be treated from inside the passenger compartment, shutting off the flow of air from outside which in certain instances may be undesirable: bad smalls, smoke, unventilated tunnels, etc...)
- the special button (5) controls engagement of the cooling system which produces cold, dehumidified air.

Air cooling system:

This is a closed cycle system in which a fluid condenses and evaporates withdrawing heat from the air in the evaporator.

It mainly comprises the following:

compressor, operated by the crankshaft through a belt: it is turned on and off through an electromagneic joint operated by the air conditioning system (as described below) and it is also controlled by the engine electronic management system which adapts idle speed when the compressor is engaged, or prevents it from engaging under power absorption conditions that would adversely affect vehicle performance levels.

NOTE:
For the 3.0 V6 24V engine a **variable displacement compressor** is used, which makes it possible to meet the different requirements of cold air without the electromagnetic joint being energised and de-energised continuously: when the requirement is high, the compressor moves to the maximum load configuration and vice versa for low requirements.

condenser, fitted in front of the engine coolant radiator: if the car is stationary, the air needed for thermal exchange is supplied operating the engine radiator fan;

evaporator, exchanger which cools the air, located in the duct-distributor;

accumulator/drier, which separates the fluid in liquid state from gas and also acts as accumulator and filter for any foreign matter;

expansion valve, which suitably lowers the fluid pressure and temperature, aiding passage from fluid to vapour;

three-level pressure switch (trinary): controls the safety and correct operation of the fluid circuit:

- it turns on the radiator fan when necessary (e.g. if the car is stationary) thereby preventing pressure increase at the condenser (cut in at 15 bar appr.);

- it stops the compressor, de-energising the electromagnetic joint, if the pressure reaches very high, thus dangerous ratings (over 28 bar appr.), or ratings too low to ensure correct operation (below 2.45 bar appr.);

Engine fan control:

In the case of low car speed the cooling carried out by the dynamic air on the condenser lowers and engagement of the two engine radiator cooling fans and of the condenser itself. This takes place through the three-level pressure switch which cuts in preventing an increase of the pressure at the condenser (over 15.2 bar).

Engagement of the engine fans takes place firstly at first speed, then through a special timer, the gradual passage to second speed takes place, avoiding sharp operation and electrical overloads at the contacts of the relays.

The delaying device works according to the following logic:

- The first speed engages with a signal leading from the pressure switch on the coolant fluid circuit: after appr. 8-12 seconds, if this signal persists, the delaying device operates the second speed.
- When the signal from the pressure switch ceases, it immediately disengages the second speed, while the delaying device still operates first speed for a maximum of 1 second.

Fuses and relays

The fuses and relays are grouped in the engine compartment, near those of the ignition/injection system:

- relay (**Q22**);
- relay (**Q32**);
- 50A fuse (**G254**);

or under the dashboard, on the bracket next to the fusebox:

- relay (**I99**);
- relay (**I100**);
- 30A fuse (**Q39**).

For further details concerning this system, refer to Group 50 "CLIMATE CONTROL".

FAN AND RECIRCULATION CONTROL

Fan:

The climate control fan **Q1** is supplied through relay **Q15** and the line leading from fuse **G39**; the relay is energised with a "key- operated" signal with the line that crosses the ignition key services relay **I35** and fuse **F13** of the fusebox **G1**.

The fan motor **Q1** is operated with an earth signal leading from the control knob **Q4**. This signal crosses the speed regulator **Q5**, comprising three resistances in series the crossing of which determines the four different speeds, depending on the signal leading from the knob **Q4**: from pin 2 of connector B (1st speed), from pin 1 of connector B (2nd speed), from pin C of connector A (3rd speed) and lastly from pin B of connector A (4th speed) with a direct signal that does not cross the regulator **Q5**.

NOTE : the regolator **Q5** incorporates a thermometric safety switch which deactivates the circuit if, owing to over- voltage, 90±5°C is exceeded (it closes again when by appr. 10°C).

First fan speed, with compressor engaged:

With control **Q4** in position "0", the fan **Q1** is stationary but the first speed is operated if the compressor is engaged: in this case a special relay **Q69** commands fan supply at first speed. This relay is in fact energised by the signal (12V) that controls engagement of the compressor (from switch **Q68** through pins 7 and 8 of connector B of knob **Q4**) and sends a signal to the regulator **Q5** in correspondence with 1st speed.

Recirculation:

The recirculation function operates through the engagement of the motor **Q27**, according to the following supply logic:

- pin 2 of **Q27** always at earth;
- 12 V at pin 3 of **Q27**: the motor turns engaging recirculation;
- 12 V at pin 1 of **Q27**: the motor turns shutting off recirculation.

Engagement takes place via switch **Q68** but with switch **Q4** on "0", "1", etc...:

- switch **Q68** not pressed: recirculation not engaged;
- switch **Q68** pressed: recirculation engaged.

N.B.: With switch **Q4** at "OFF" recirculation is engaged, regardless of the position of switch **Q68**.

Controls lighting:

The lights **F8a** and **F8b**, inside the control panel, together with the led next to switch **Q68** are supplied by the sidelights circuit - connector D of fusebox **G1**.

Wiring Diagram

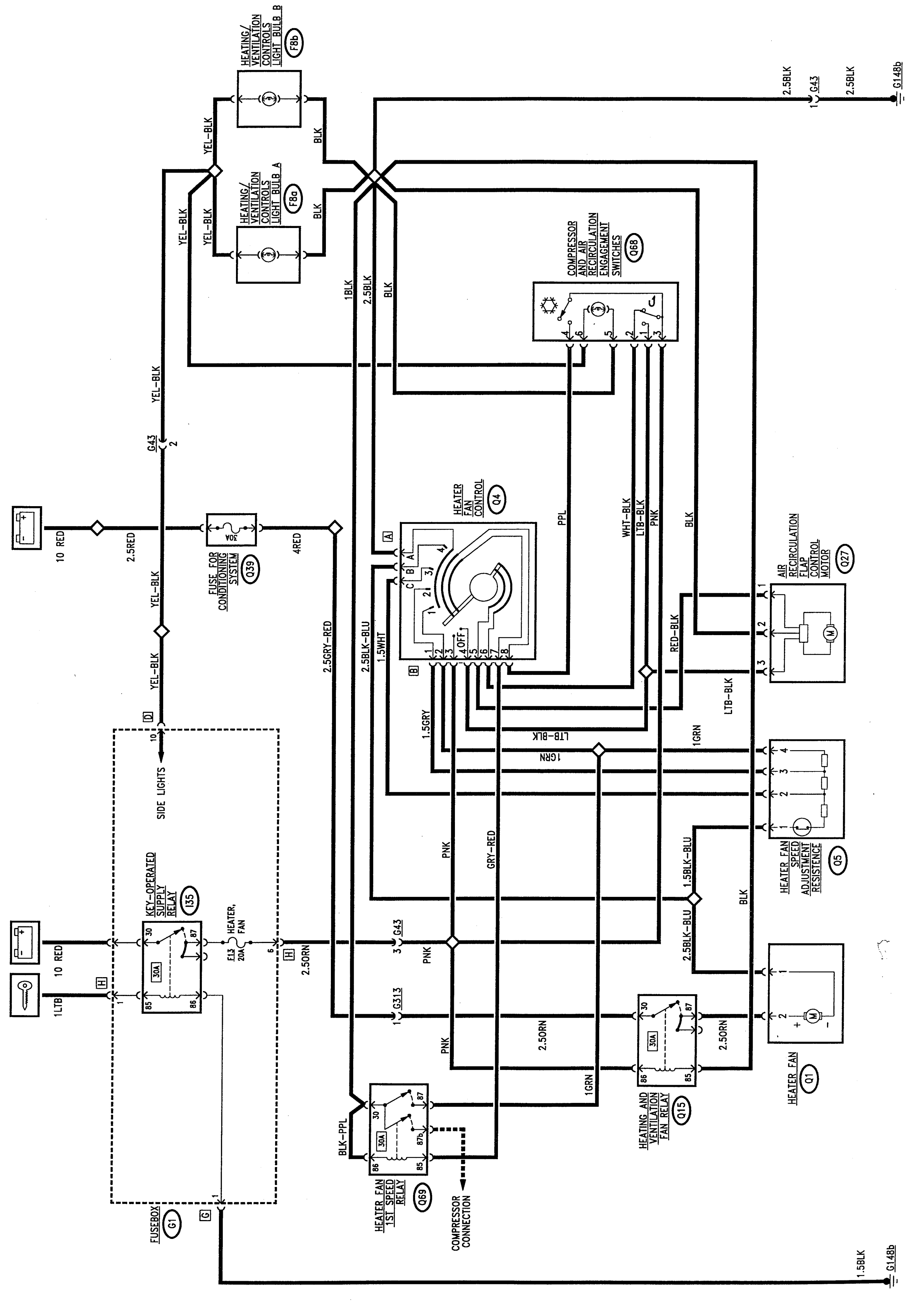

COMPRESSOR ENGAGEMENT

The electromagnetic joint that operates the compressor **Q11** is controlled by relays **Q22** and **Q32**.

The coil of relays **Q22** and **Q32** receive the key-operated supply (line protected by fuse **F17** of **G1**); their power line is supplied with battery voltage through fuse **Q39** (30A).

Relay **Q22** is energised, consequently it supplies 12V current to the electromagnetic joint **Q11**, according to the following logic:

- relay **Q32** is energised by an earth signal leading from **Q69**, which is in turn energised with a positive signal leading from the compressor engagement switch **Q68**; this signal crosses the control knob **Q4** which cuts it off when the knob is at "OFF": in fact in this condition, the compressor cannot be engaged. The same signal simultaneously controls fan engagement at 1st speed ("Fan and Recirculation Control")
- relay **Q32** consequently sends two signals to the Motronic control unit **S11**: a direct signal to "request compressor engagement" - pin 64 - and a second signal that crosses the minimum and maximum pressure switch (trinary) **Q20** which cuts in in the event of high or low pressure in the cooling system: in this case the signal does not reach the control unit - pin 65 - which does not command the compressor
- at relay **Q22** which is energised and supplies the joint **Q11** which thus engages the compressor, but only when the internal logic has checked determinate conditions (e.g. the compressor is not engaged in the event of the need for full power at the engine, etc..)

Wiring Diagram

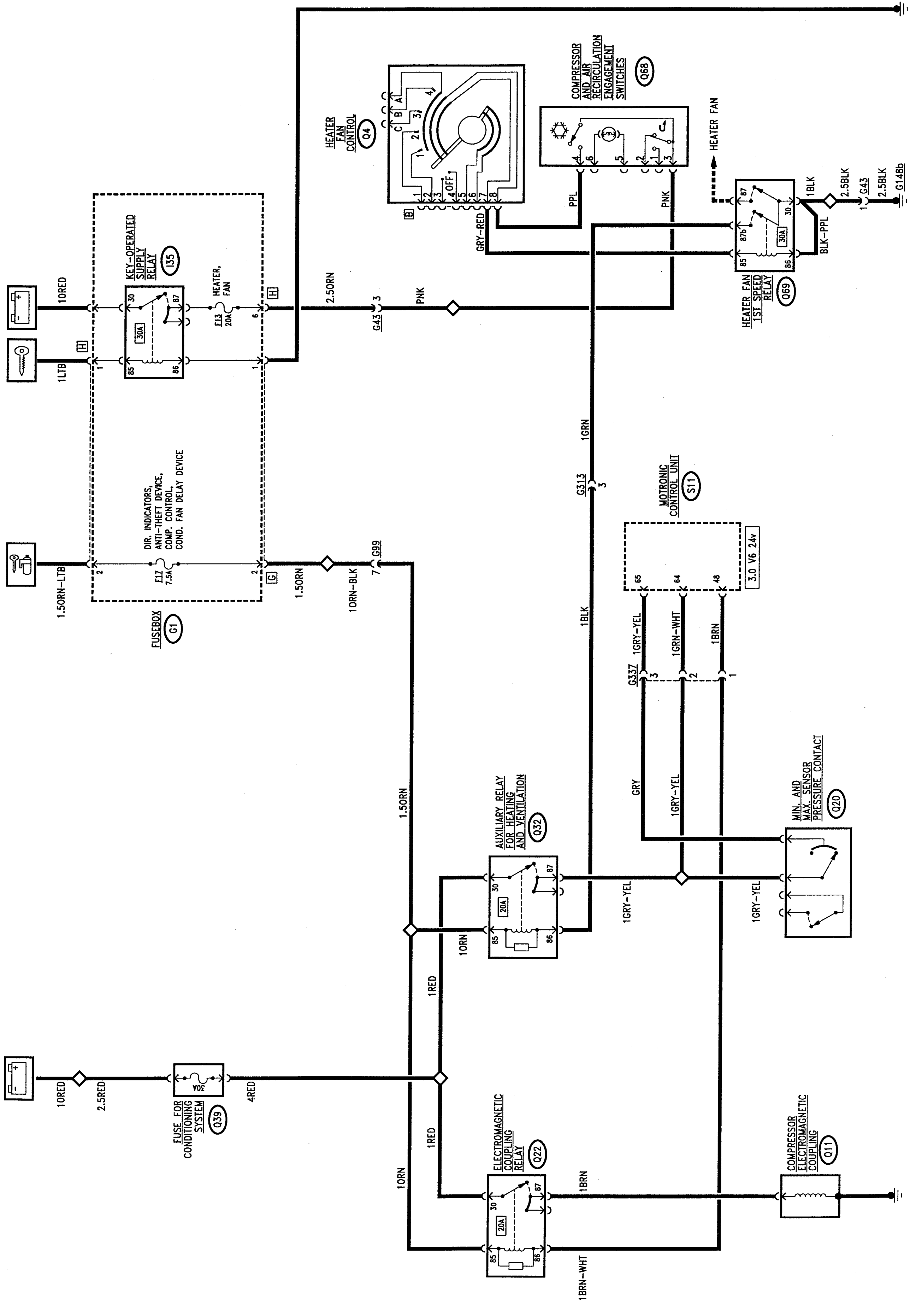

ENGINE COOLING FAN CONTROL

Two fans **P2a** and **P2b** ensure the necessary ventilation of the cooling air for the engine radiator and air conditioning system condenser.

N.B.: the two fans are in parallel, therefore they are operated together, always following the same logic.

The two fans are always supplied by battery voltage, through the line protected by wander fuse **G254**; they are operated by an earth command signal: this signal arrives directly (2nd speed) or through the additional resistances **O22a** and **O22b** (1st speed), fitted with a thermal safety fuse.

The delaying device **Q42** controls the gradual engagement of the fans which are operated at two different speeds, also via two relays **I99b** and **I100**, the three devices are located on the auxiliary bracket next to the fusebox.

The delaying device works according to the following logic:

The "key-operated" voltage (line protected by fuse **F17** of **G1**) supplies the coil and the electronic devices of the delaying device **Q42** -pin 85, and relay **I100**; the coil of the delaying device **Q42** is energised by an earth signal -pin P- which leads from the trinary pressure switch **Q20**: this causes the immediate sending of an earth signal - pin 30 - to energise relay **I99** which sends the earth command to the two ngine cooling fans **P2a** and **P2b** through the additional resistances **O22a** and **O22b**: 1st speed.

After appr. 12 seconds, if the signal from the trinary persists, the delaying device operates the second speed: in fact, the earth signal is cut off from pin 30 and a signal leaves pin 86, which energises **I100** which sends the earth command directly to the two engine cooling fans **P2a** and **P2b**: 2nd speed.
When the signal from the pressure switch ceases, the fans are disengaged.

The two fans are operated at the two different speeds also by the two-level thermal contact **L33** which controls the temperature of the coolant in the engine radiator: when a first level is reached, relay **I99** is energised which sends the earth command to the two engine cooling fans **P2a and P2b** via resistances **O22a** and **O22b**: 1st speed. Relay **I99** is supplied by the line protected by fuse **Q39** (30A).

If the second temperature level is reached, relay **I100** is energised which sends the earth command directly to the two engine cooling fans **P2a and P2b**: 2nd speed.

Wiring Diagram

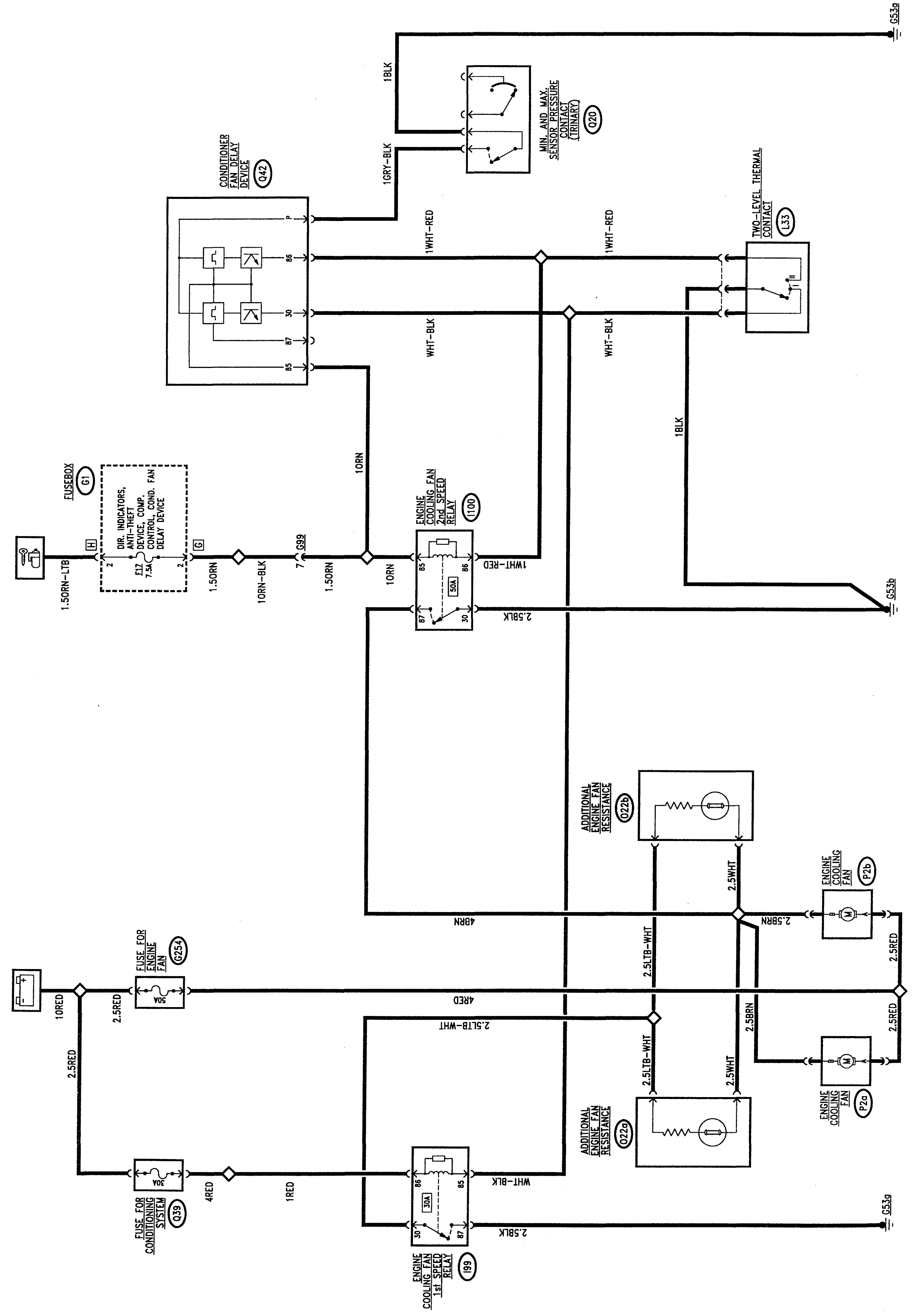

LOCATION OF COMPONENTS

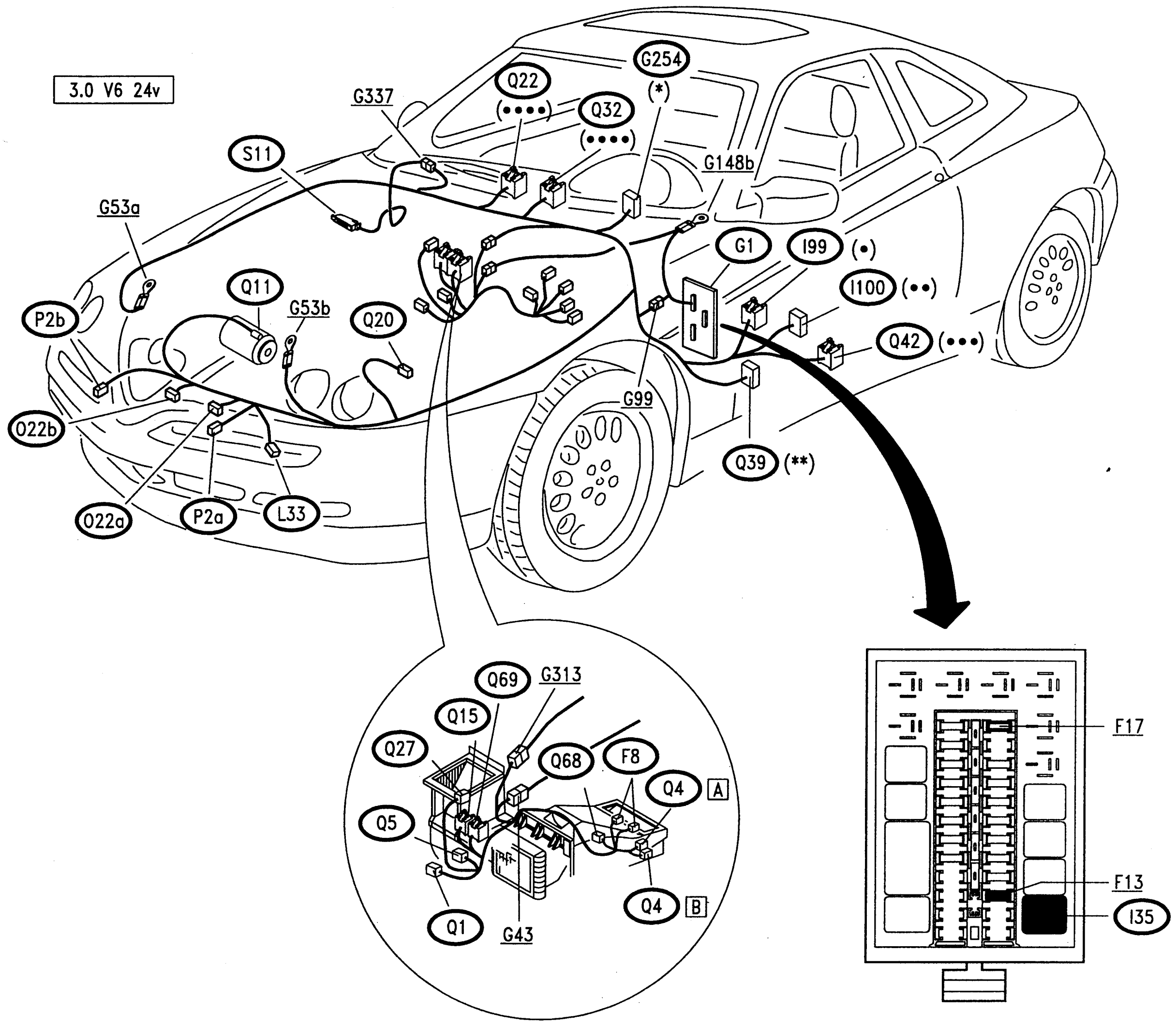

(•) Yellow base
(••) Black base
(•••) White base
(••••) Grey base

(*) Black fuse holder
(**) Green fuse holder

FAULT-FINDING TABLE

NOTE:
For better clarity, the fault-finding table concerning the air conditioner has been subdivided into three parts which comprise the three functions described separately also in the wiring diagrams:

- **Fan and recirculation control**
- **Compressor engagement**
- **Engine cooling fan/s control.**

Fan and recirculation control

Fault	Component to be checked										
	F13	Q39	Q1	Q15	Q5	Q4	Q27	Q68	F8a (1)	F8b (1)	Q69
Engagement of fan	•	•	•	•							
Engagement of fan at the different speeds					•	•					
Engagement of fan at 1st speed with compressor engaged						•		•			•
Recirculation function						•	•	•			
Climate control panel lighting									•	•	

(1) It is possible to replace only the bulbs with their bulb holder

Compressor engagement

Fault	Component to be checked										
	Q39	F17	F13	Q11	Q20	Q22	Q32	Q69	Q4	Q68	S11
Engagement of compressor (under all circumstances)	•	•	•	•		•	•	•	•	•	•
Engagement of compressor (only under certain circumstances) (•)					•						•

(•) Operation of the compressor is excluded from the system logic under the following conditions:

- coolant fluid pressure > 28 bar appr.;
- coolant fluid pressure < 2.5 bar appr. (circuit drained);

In addition the operation of this device is also determined by the logic of the ignition/injection control unit (see corresponding section).

Engine cooling fan/s control

Fault	Component to be checked									
	Q39	G254	F17	P2a/b	O22a/	L33	Q20	Q42	I99	I100
Engagement of fans (under all circumstances)	•	•		•						
Engagement of fans at two different speeds (only one speed works)			•		•			•	•	•
Engagement of fans due to high engine temp. (at two speeds)						•				
Engagement of fans due to high coolant fluid pressure (at two speeds)							•			

ENGINE COOLING
(versions with heater)

INDEX

(*) See the corresponding section of "Spider - Gtv - ELECTRIC SYSTEM DIAGNOSIS". For item involving the engine refer to the 3.0 V6 engine.

WIRING DIAGRAM

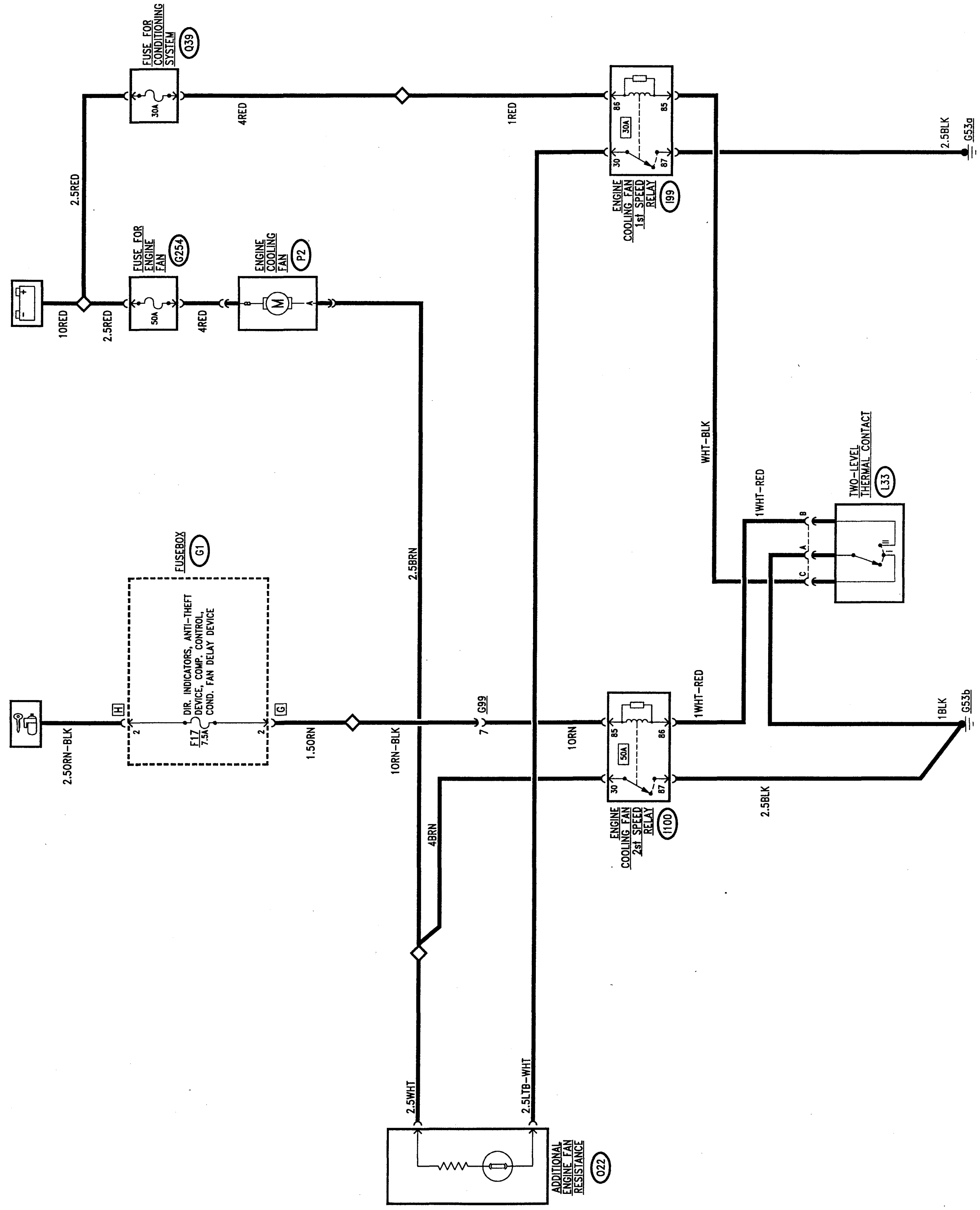

GENERAL DESCRIPTION

An electric fan increases the dispersion of heat by the engine coolant fluid radiator because of a thermometric switch which detects high coolant fluid temperature and operates the fan at two different speeds: the first is operated at a first temperature level of the coolant; the second speed is engaged at a higher temperature.
N.B. This wiring diagram only refers to cars with heater: for cars fitted with air conditioner, see the corresponding electric circuit "engine cooling fan control" given in the section "Air Conditioner".

FUNCTIONAL DESCRIPTION

The fan **P2** is supplied with battery voltage through a special fuse, **G254** (50A), and it is operated an earth at the opposite terminal: if this earth signal leads directly from relay **I100** the 2nd speed is operated; when it leads from relay **I99** and crosses the additional resistance **O22**, it operates 1st speed.

In fact the fan works at two different speeds, thanks to an additional resistance: the first speed is engaged at the first coolant temperature level detected by the thermal contact; second speed is engaged at a higher temperature (second level). The additional resistance is protected inside bt a thermal fuse which cuts off the circuit if the temperature exceeds appr. 126°C.

The signal leading from the 1st level (87-92°C) of the two-level thermal contact **L33** energises relay **I99** - supplied by the line of wander fuse **Q39** (30A) - thereby sending an earth signal to the additional resistance **O22** and from this to the fan, which is operated at 1st speed.

If the coolant fluid reaches the 2nd level (92 - 97°C) of thermal contact **L33**, the earth signal energises the coil of relay **I100** - supplied from the ignition key through the line of fuse **F17** of **G1** - directly operating the fan **P2** at 2nd speed.

FAULT-FINDING TABLE

Fault	Component to be checked							
	F17	Q39	G254	P2	L33	O22	I99	I100
Fan (under all circumstances)	•		•	•				•
Fan (fails to start even though the coolant fluid temperature is high)	•	•			•	•	•	
Fan, at 2 different speeds		•			•	•		•

LOCATION OF COMPONENTS

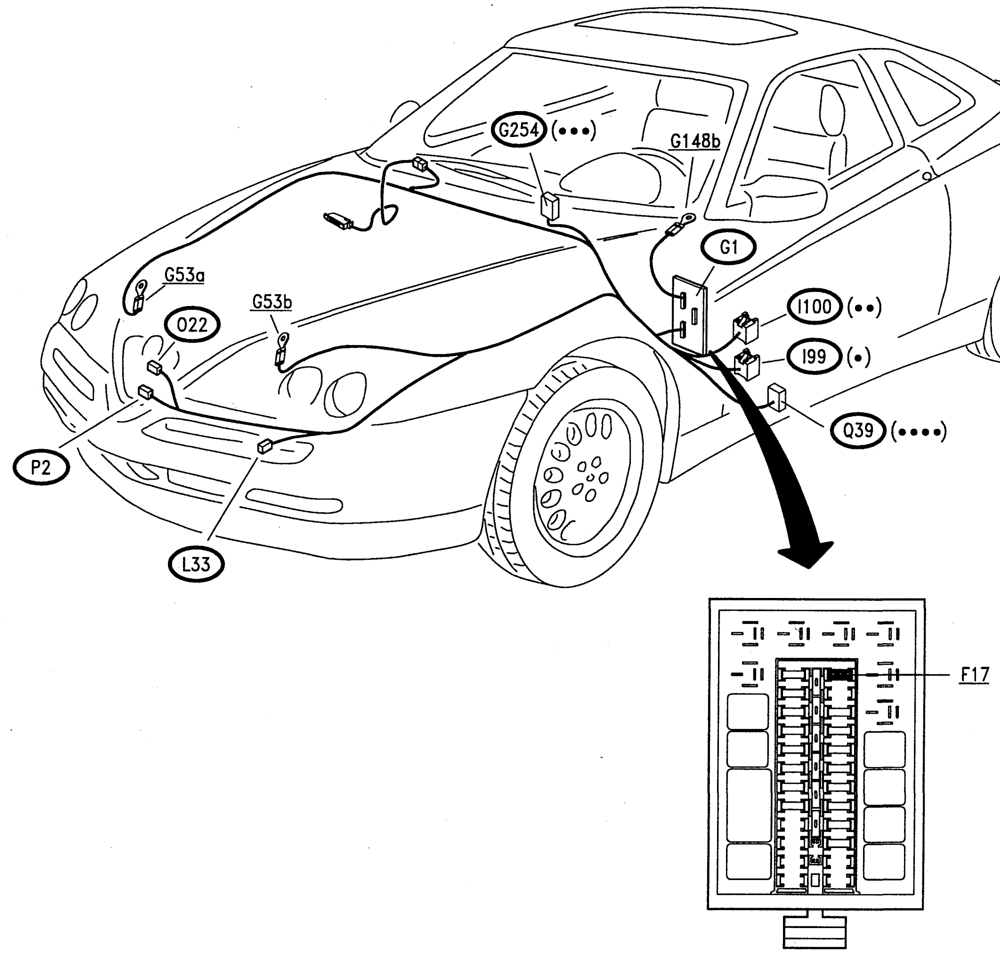

(•) Yellow base
(••) Black base
(•••) Black fuseholder
(••••) Green fuseholder

ALFA ROMEO CODE

INDEX

(*) See the corresponding section of "Spider - Gtv - ELECTRIC SYSTEM DIAGNOSIS". For item involving the engine refer to the 3.0 V6 engine.

WIRING DIAGRAM

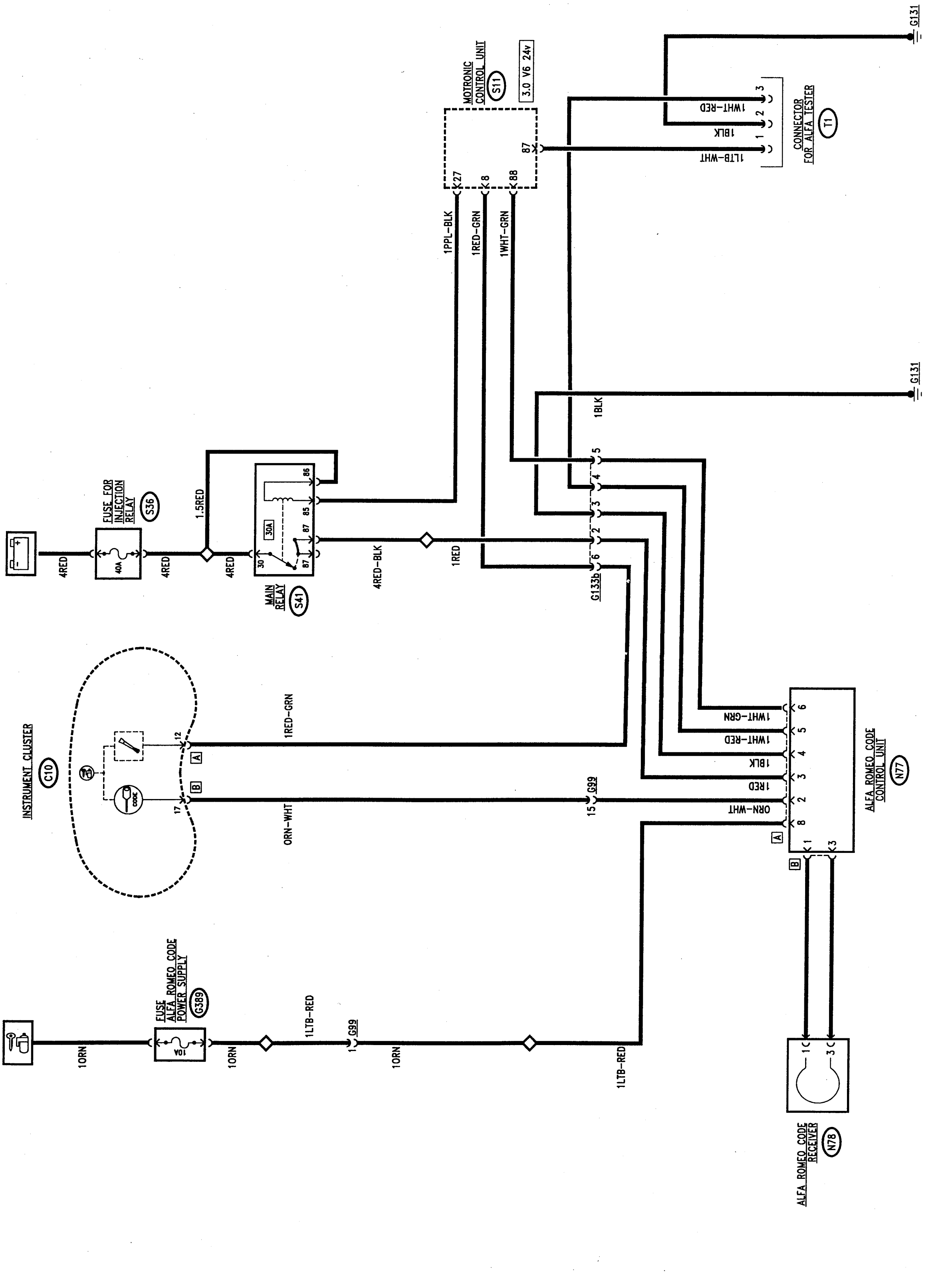

DESCRIZIONE FUNZIONALE

The ALFA ROMEO CODE control unit **N77**, to be found next to the fusebox **G1**, is connected through connector B to a special pair of cables to the receiver **N78**, consisting in a an aerial coaxial with the ignition switch.

Through connector A it is connected to the Motronic control unit **S11** and to the other systems: at pin 8 it receives the "key-operated" supply through the line of wander fuse **G389**, while at pin 3 it receives the direct supply through fuse **S36** and relay **S41** of the Motronic system; pin 4 is earthed.

The connection line with the ALFA ROMEO CODE warning light on the instrument cluster leads from pin 2.

Pins 5 and 6 handle communication between the ALFA ROMEO CODE control unit **N77** and the Motronic control unit **S11**: this communication takes place by "intercepting" the diagnosis line K which leads from **S11** - pin 88 - to the diagnosis connector **T1**.

CONTROL SYSTEM -
3.0 V6 24v engine:
BOSCH MOTRONIC M3.7.1

INDEX

WIRING DIAGRAM A

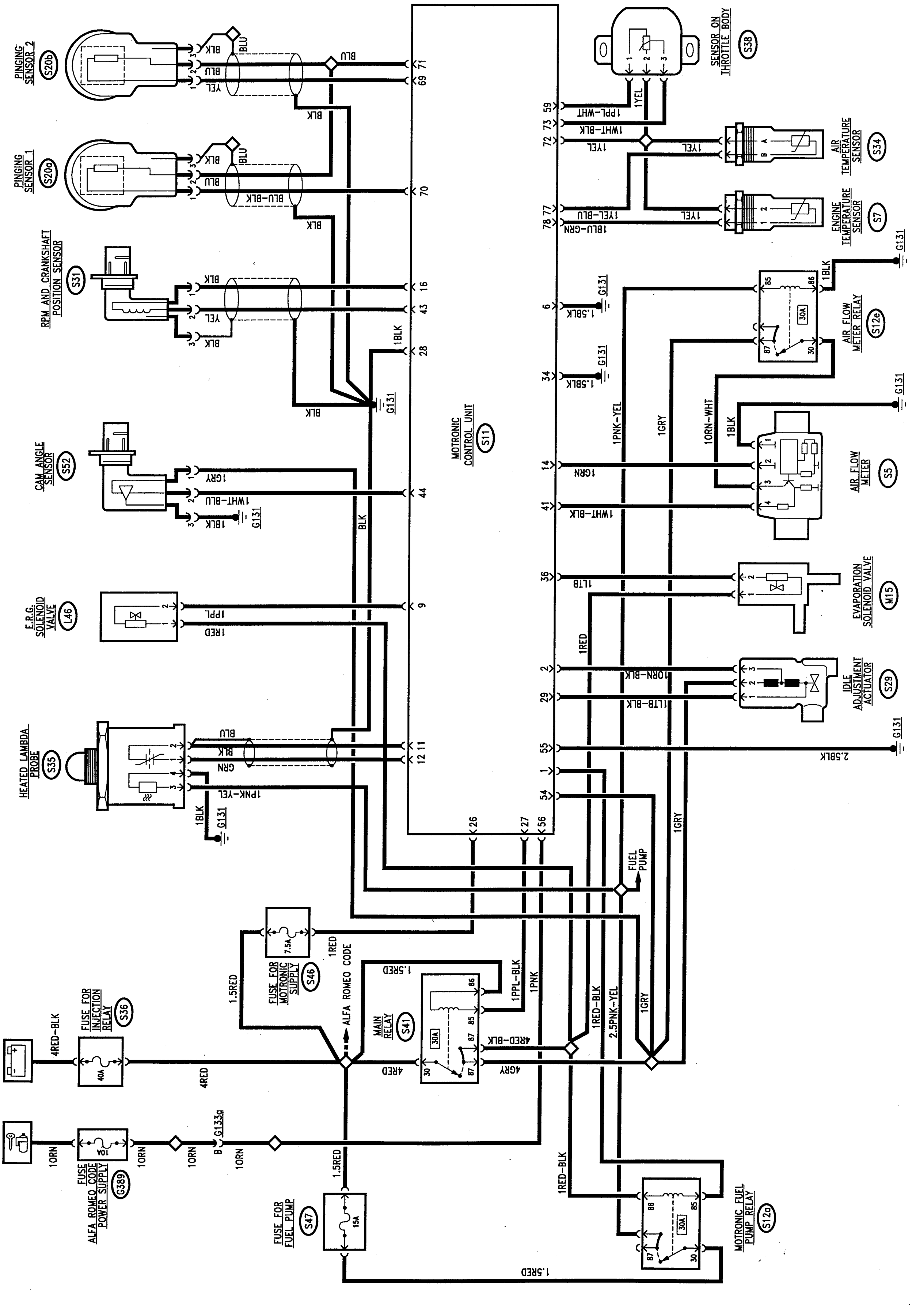

WIRING DIAGRAM B

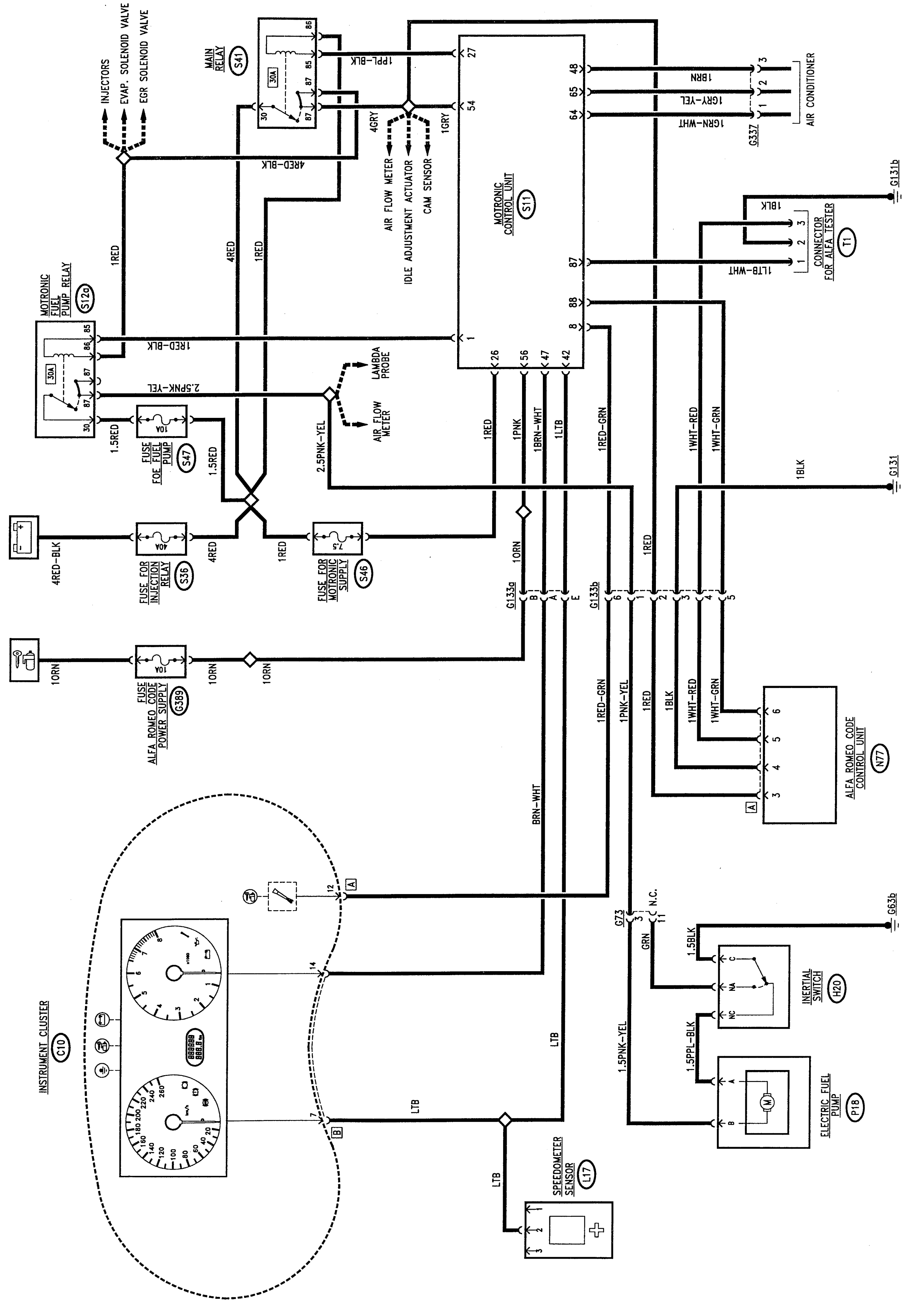

WIRING DIAGRAM C

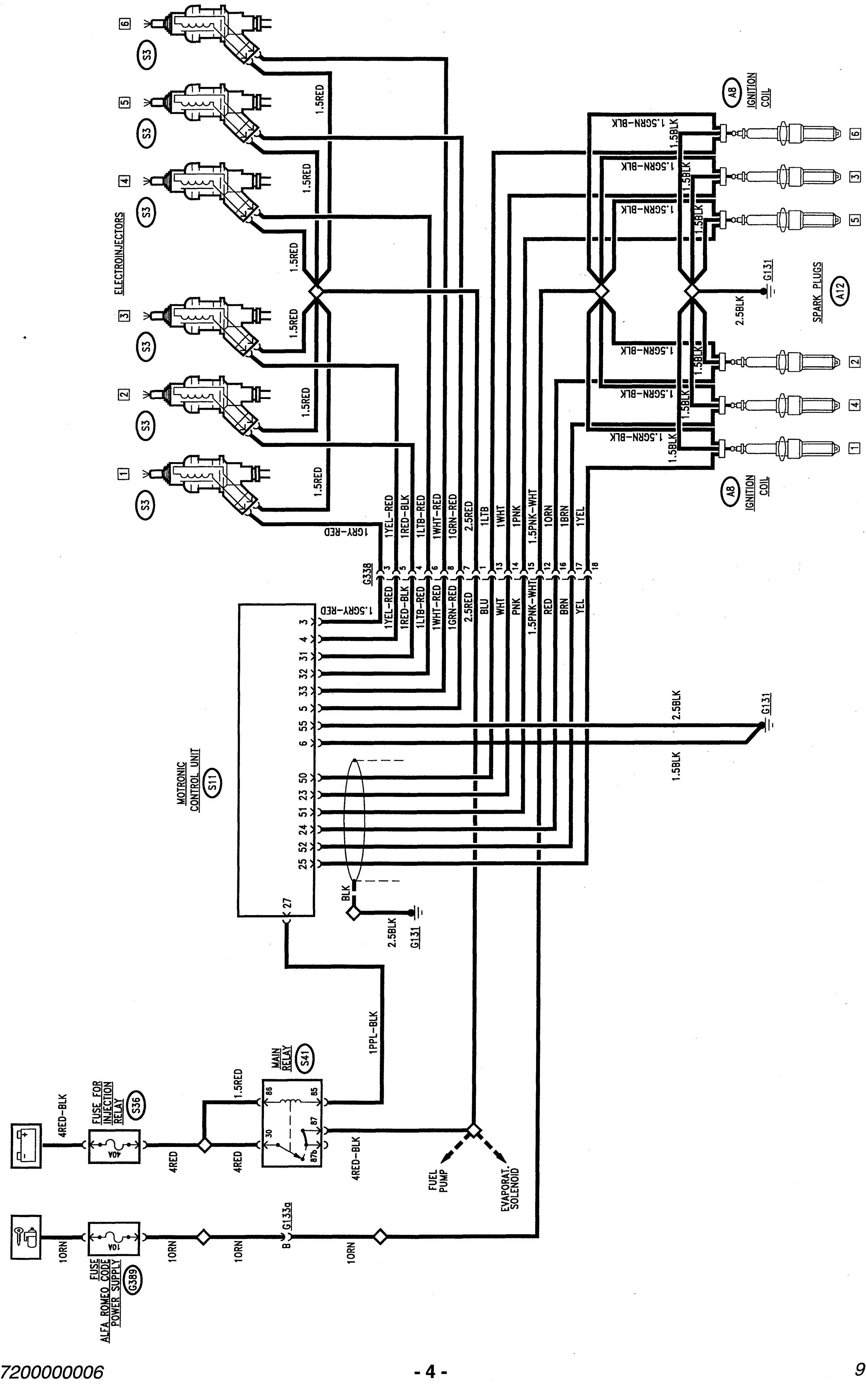

GENERAL DESCRIPTION

An electronic control system supervises and regulates all the parameters of the engine, optimising performance and consumption levels through response in real time to the different operating conditions: this sophisticated latest generation system comprises a single control unit which controls both ignition and injection.

This is the M 3.7.1 version of the proven and reliable BOSCH MOTRONIC system.

FUNCTIONS OF THE SYSTEM

Sequential and timed injection (S.E.F.I.)

With this control unit injection is sequential and timed for each cylinder: the injection instant (delivery of fuel into the intake manifolds through the opening of the injectors) is not simultaneous for all the cylinders, but takes place for each cylinder in correspondence with the optimal point of injection, calculated by the control unit following special maps according to the load, speed and temperature of the engine.

Static ignition

An ignition system has been adopted with "static distribution" (with semi-conductors, without distributor). This solution makes it possible to eliminate rotary components; in addition, it does not produce external sparks thus reducing the risk of interferences; lastly it reduces the number of high voltage cables and connectors; as the power modules for controlling the primary windings of the coil are inside the control unit.

Static ignition takes place through six coils located on the cylinder head.

Each coil directly supplies a spark plug without intermediate cables.

Metering the air flow rate

The air flow meter adopted is of a more modern design known as the "hot film" type. Outside, the air-flow meter looks like a part of duct between the intake manifold and the air cleaner.

Inside the air-flow meter there is an electronic circuit and a plate that is crossed by the air which passes in the duct.

The film plate is kept at a constant temperature (appr. 120°C above the temperature of the incoming air) by a heating resistance placed in contact with it.

The mass of air flowing through the manifold tends to withdraw heat from the plate: therefore, to keep its temperature constant, a certain current needs to flow through the heating resistance: this current, suitably measured, is proportionate with the mass of flowing air.

N.B. This air flow meter measures directly the mass of air (and not the volume as in the previous versions with "floating port"), thereby eliminating problems of temperature, altitude, pressure, etc.

Cylinder detection

Following the sequential and timed injection system, a timing sensor has been introduced (cam angle sensor): this makes it possible to detect which cylinder is in the bursting stroke when the engine is started, in order to be able to start the correct injection sequence. The sensor is formed of a Hall-effect device by which the voltage signal sent to the control unit "lowers" suddenly when the tooth machined on the camshaft passes in front of the actual sensor; therefore a signal is sent every two turns of the crankshaft.

Conversely, the rpm sensor sends a reference signal for each turn of the engine and each subsequent tooth of the phonic wheel on the flywheel informs the control unit of an increase of the angular position of the crankshaft, so that injection is sent correctly to the suitable cylinder and the spark to the corresponding pair of cylinders.

Fuel pump

The control logic of the fuel pump carried out by the control unit which is mainly based on the rpm signal immediately cuts off the supply to the pump as soon as the engine stops.

Moreover, the pump will not operate with the key engaged and the engine not running.

In this car, this logic is integrated - in order to further higher the standards of safety - by the **inertial switch** device: this is an electromechanical switch which, in the event of heavy shocks, opens to cut off the circuit that takes the earth to the fuel pump, which stops instantaneously. This device is particularly important as an integration of the safety guaranteed by the logic of the control unit, especially if the car is hit from behind or in the case of other accidents in which the engine does not stop immediately.

Percentage of exhaust gas recirculation

Nox (nitric oxide) is developed at high temperatures in the combustion chambers.

To reduce these emissions an E.G.R. (Exhaust Gas Recirculation) system is adopted which by recirculating part of the exhaust gases, lowers the temperature, thus the Nox produced, in the combustion chambers. In fact, part of the exhaust gas is withdrawn through the special EGR Valve and re-admitted to the intake box where it is mixed with the intaken air and burnt again in the engine. The EGR valve is modulated by a solenoid valve controlled by the injection control unit and, as a result of the type of control, in addition to reducing the amount of Nox, consumption levels are also optimised.

The percentage of exhaust gas to be returned to the engine is established by the control unit taking account of a specific characteristic curve which depends on the load, speed and temperature of the engine.

OPERATING LOGIC

– **Identification of the "operating point":**

the "point of operation of the engine" is located mainly through two sensors: the rpm sensor informs the control unit of the speed of rotation of the engine; the air flow meter supplies the value of the mass of air actually entering the cylinders, defining the instantaneous volumetric yield of the engine.

– **Adjustment of injection times (quantity of fuel):** the control unit controls the injectors extremely quickly and precisely, calculating the opening time on the basis of engine load (rpm and air flow), also taking into account the battery voltage and the temperature of the engine. Injection is "sequential", i.e. the injectors are opened in correspondence of the exhaust stroke of the corresponding cylinder.

– **Ignition adjustment (calculation of advances)**:

the control unit calculates the advance on the basis of the engine load (rpm and air flow); the value is also corrected according to the temperature of the intaken air and that of the engine.

– **Cold starting control:**

during cold starts the control unit uses special advance values and injection times.

When a determinate temperature/rpm ratio is reached, the control unit resumes normal operating conditions.

– **Control of enrichment during acceleration:**

upon the need for acceleration, the control unit increases injection in order to reach the required rpm as quickly as possible.
This function takes place through the potentiometer located on the throttle which instantaneously informs the control unit of the need to accelerate.

– **Fuel cut-off during deceleration:**

with the throttle closed and an engine speed above a certain threshold, the control unit de-activates fuel injection; this way the rpms decrease rapidly towards idle speed reducing the speed and fuel consumption. The cutoff threshold value varies according to the temperature of the engine and the speed of the car.

– **Control of idle speed:**

the adjustment of the engine idle speed is carried out through the special actuator which acts on the throttle by- pass.

This device acts as a regulator for cutting in the various services (e.g. conditioner compressor): in fact, when the throttle is closed, the actuator adjusts the by-pass gap compensating the load required by the services in order to ensure that idle speed is as constant as possible.

– **Maximum Rpm limiting:**

above a certain threshold the control unit automatically stops the injection of fuel preventing the engine from "over-revving".

– **Combustion control -lambda sensor-:**

the oxygen sensor (or "lambda" sensor) informs the control unit of the amount of oxygen at the exhaust, and therefore the correct air-fuel metering.

The optimum mixture is obtained when the lambda coefficient = 1 (optimum stoichiometric mixture). The electric signal sent by the sensor to the control unit changes abruptly when the composition of the mixture departs from lambda = 1. When the mixture is "lean" the control unit increases the amount of fuel, reducing it when the mixture is "rich" so that in this way the engine operates as far as possible around the ideal lambda rating.

The signal from the lambda sensor is processed inside the control unit by a special integrator which prevents sudden "oscillations".

The sensor is heated by an electrical resistance so that it quickly reaches the correct operating temperature (appr. 300 °C).

Through this probe it is therefore possible to adjust engine carburetion precisely. Among other items, this makes it possible to meet emission limit regulations.

– **Pinging control:**

Through pinging sensors the control unit is informed if any pinging or "knocking" occurs and it corrects the spark advance "delaying" it accordingly; a further correction also takes account of the air temperature, in fact when the temperature of the intake air is high, pinging is more accentuated.

The intaken air temperature sensor, to be found just downstream of the air-flow meter, is not used to calculate the engine load but to control the pinging parameters and spark advances.

– **Fuel vapour recovery:**

the fuel vapours collected from the various points of the supply circuit in a special activated carbon canister are ducted to the engine where they are burnt: this takes place through a solenoid valve which is opened by the control unit only when the engine is in a condition that allows correct combustion without adversely affecting the operation of the engine: in fact the control unit compensates this amount of incoming fuel by reducing delivery to the injectors.

– **E.G.R. valve control**

The percentage of exhaust gas to be returned to the engine is determined by the control unit taking account of a specific characteristic curve which depends on the engine load and speed: recirculation is only activated when the engine speed is between 2500 and 4000 rpm., also in relation to the temperature of the engine (higher recirculation percentage with high temperatures).

– **Connection with the air conditioner compressor:**

the control unit is connected with the air conditioner system and it cuts in the compressor in relation to operation of the engine. As this service absorbs a considerable amount of power, the control unit:

- adapts the engine idle speed each time the compressor cuts in; if the engine speed falls below 700 rpm, the compressor is turned off;
- when there is the need for power (high throttle opening speed starting from below 3500 rpm, or full load, or high engine temperature - over 117°C), it momentaneously cuts out the compressor
- when the engine is being started the compressor is disabled until normal operating conditions have been reached.

– **Connection with the ALFA ROMEO CODE system**

as soon as the Motronic control unit receives the signal that the key has been turned to MARCIA, it "asks" the ALFA ROMEO CODE system for consent to start the engine: this consent is given only if the ALFA ROMEO CODE control unit recognizes the code of the key engaged in the ignition switch as correct. This dialogue between the control units takes place on diagnosis line K already used for the Alfa Romeo Tester.

– **Self-diagnosis:**

the key has a **self-diagnosis system**, which continuously monitors the plausibility of the signals from the various sensors and compares them with the limits allowed: if these limits are exceeded, the system detects a fault and turns on the corresponding warning light on the instrument cluster.

The warning light turns on when the engine is started to indicate the initial test of the entire system (appr. 4 seconds), it then turns off if no errors have been memorised: otherwise it stays on.

For certain parameters, the control unit replaces the abnormal values with suitable mean ones so that the car can "limp" to a point of the Service Network.

These "recovery" values depend on the other correct signals and they are defined individually by the control unit operating logic.

The self-diagnosis system also enables quick and effective location of faults connecting with the ALFA ROMEO Tester (see "Fault-finding"), through which all the errors memorised can be "read". It is also possible to check the operating parameters recorded by the control unit and operate the single actuators to check whether they are working properly.

COMPONENTS

The electronic control unit receives the signals leading from the **sensors** which "read" the engine operating parameters. It processes them according to a logic stored inside in "maps" which correlate the different parameters in the best way possible and it operates the **actuators** accordingly so that the engine always works with the highest level of regularity and yield.

The sensors are the following:

- engine temperature sensor (**S7**);
- air temperature sensor (**S34**);
- sensor on throttle body (**S38**);
- rpm sensor (**S31**);
- cam angle sensor (**S52**);
- heated lambda sensor (**S35**)
- air-flow meter (**S5**);
- pinging sensors (**S20a** and **s20b**);

The actuators are the following:

- injectors (**S3**);
- ignition coils (**A8**);
- fuel pump (**P18**);
- idle adjustment actuator (**S29**);
- vapour recovery solenoid valve (**M15**) ;
- E.G.R. solenoid valve (**L46**);

The control unit is also connected with:

- the climate control unit;

- the ALFA ROMEO CODE control unit (**N77**);
- the instrument cluster (**C10**) to which it supplies the signal for turning on the diagnosis warning light and for the rev counter;
- the sensor (**L17**) from which it receives the car speed signal.

The system is completed by three relays: the first two - the main relay (**S41**), and the fuel pump relay **S12a** operate the fuel pump, the injectors, the coils and the other components of the system, while the third - the air-flow meter relay (**S12e**) supplies the corresponding component.

The supply line for the entire system is protected by fuse **S36**, while the control unit is protected by wander fuse (**S46**); another fuse protects the pump (**S47**). Lastly, there is an earth point (**G60**) on the engine. Connector **T1** enables connection with the ALFA ROMEO Tester: this is located inside the car next to the control unit.

FUNCTIONAL DESCRIPTION

The Motronic control unit **S11** controls and adjusts the entire electronic ignition and injection system; all the system supplies are protected by fuse **S36** (40A).

The control unit is supplied at pin 26 directly by the battery through fuse **S46** (7.5A). At pin 54 it receives the supply from the main relay **S41**, while at pin 56 it receives the "key- operated" supply.

Pins 55, 6, 28 and 34 are earthed and serve as reference respectively for the ignition coils, the injectors, electronic screening and the final power stages.

The main relay **S41**, acts as supply relay for the whole system; it is energized by a control signal - earth - leading from pin 27 of the control unit and consequently sends the supply (12V) to pin 54 of the control unit itself, to the fuel pump relay **S12a**, to the air-flow meter relay **S12a** to the vapour recovery solenoid valve **M15**, to the idle speed actuator **S29**, to the cam angle sensor **S52**, to the EGR solenoid valve **L46** and lastly to the injectors **S3**.

The "key-operated" supply crosses fuse **G389** and supplies the control unit at pin 56 and the primary windings of the coils **A8**.

The supply of the main relay **S41** is energized by a control signal - earth - leading from pin 1 of the control unit **S11**. Consequently, the relay supplies the resistance of the lambda sensor **S35**, the air flow meter relay **S12e**, and of course the fuel pump **P18**; this supply line is protected by a special fuse **S47** (15A).

The earth reaches the pump **P18** via the inertial switch **H20** which cuts off the circuit in the event of impact.

The control unit **S11** receives numerous signals from the different sensors, thereby keeping all the engine operating parameters under control.

Through a frequency signal sent to pins 43 and 16 of the control unit, the rpm sensor **S31** supplies information about the engine rpm; the two above-mentioned signals are very low in intensity and are therefore suitably screened.

The sensor is inductive and detects the number of revolutions of the engine through the change in a magnetic field produced by the passage of the teeth of a "phonic" wheel (60-2 teeth) fitted on the flywheel.

The cam angle sensor **S52** (timing sensor), is supplied at 12 V by the main relay **S41**, and sends a signal in frequency corresponding to the phase to pin 44 of the control unit itself.

The sensor comprises a Hall effect device due to which the voltage signal sent to the control unit "lowers" abruptly when the tooth machined on the camshaft passes in front of the sensor.

The heated lambda sensor **S35** supplies the control unit information about the correct composition of the air-fuel mixture detecting the concentration of oxygen in the exhaust gas; this takes place through the signal sent to pin 12 of the control unit, while pin 11 supplies the reference earth; The sensor is heated by a resistance to make sure that it operates correctly also when the engine is cold; the resistance is supplied by the fuel pump relay **S12a.**

The throttle body sensor **S38**, is supplied by the control unit from pin 59 and connected to the electronic earth at 72 and it sends a signal to pin 73 which is proportionate with the degree of opening of the throttle itself.

The engine temperature sensor **S7**, connected to the electronic earth at pin 72, supplies a signal to pin 78 proportionate with the temperature of the engine coolant, detected with an NTC material (resistance that lowers with the temperature).

The intaken air temperature sensor **S34**, connected to the electronic earth at pin 72, supplies a signal at pin 77 that is proportionate with the temperature of the air entering the intake box, detected with an NTC material (resistance that lowers with the temperature).

The pinging sensors **S20a and S20b**, through a frequency signal sent to pins 69 and 70 of the control unit, supplies information about the pinging conditions, while a reference earth leads from pin 71; these two signals are very low in intensity and are therefore suitably screened.

The sensor comprises a piezoelectric plate which detects the vibrations produced when the engine is running, exploiting a particular characteristic of piezoelectric materials which generate an output voltage when subjected to mechanical stresses; this voltage is filtered and analysed by the control unit which corrects the ignition parameters accordingly.

The air flow meter **S5**, is supplied by the special relay **S12e**: from pin 14 of the control unit it receives the reference earth, while it sends a signal proportionate with the air flow to pin 41.

The air flow meter is of the "heated film" type: a diaphragm is interposed in a measurement channel, through which the intake air flows: this diaphragm is kept at a constant temperature by a heating resistance; the mass of air that crosses the measurement channel tends to withdraw heat from the diaphragm, therefore, in order to maintain its temperature constant, a certain amount of current must flow through the resistance: this current, appropriately measured, is proportionate with the mass of air flowing in the channel.

Relay **S12e**, supplied directly with 12 V by relay **S41**, is energized by the fuel pump relay **S12a** and thus supplies the meter **S5** itself.

On the basis of the signals received from the sensors and of the calculations carried out, the control unit **S11** controls the opening of the single injectors **S3** through special signals - of the duty-cycle type - pins 3 (cyl. 1), 4 (cyl. 3), 5 (cyl. 5) 31 (cyl. 2), 32 (cyl. 4) and 33 (cyl. 6). The injectors receive consent (12V) to open from the main relay **S41**.

The static ignition system is controlled by the control unit directly which automatically adjusts the advance. N.B. the power modules which generate the high voltage pulses are located inside the control unit. The control signals (earth) for the primary windings of the coil **A8** lead from the control unit, while the secondary winding sends the pulse to the spark plugs **A12**: from pin 23: for cylinder 3, pin 24: cylinder 3, pin 24: cylinder 2, pin 25: cylinder 1; pin 50 cylinder 6; pin 51 cylinder 5 and pin 52 cylinder 4.

The primary windings of the coil **A8** are supplied at 12 V ("key- operated") by relay **S42**.

The power modules inside the control unit are connected to earth via pin 55.

The idle speed adjustment actuator **S29** forms a bypass line for the flow of air; this comprises two windings: one opens and the other closes a valve that adjusts the gap of the by- pass section; a safety spring establishes a mean opening value in the event of a failure to this device; the actuator, supplied by the main relay, **S41**, is controlled by the control unit through the duty-cycle signals of pins 29 (closing) and 2 (opening).

The vapour recovery solenoid valve **M15** allows the passage of the fuel vapours towards the engine intake where they are added to the mixture entering the combustion chamber; this valve, supplied by the main relay **S41**, is opened by the control unit when the engine is under load through a duty cycle signal from pin 36.

The E.G.R. solenoid valve **L46**, controlled by the control unit, operates the actual E.G.R. valve modulating its opening: the latter is a vacuum-operated diaphragm valve: the electropneumatic valve works by changing this vacuum which is withdrawn from the same "takeoff" used for the servobrake.

The solenoid valve is controlled from pin 9 of the control unit while it is supplied at 12 V by main relay **S41**.

The tachometric signal (car speed) reaches the control unit at pin 42 via sensor **L17**; while from pin 47 the control unit sends a "pulse" signal to the cluster **C10** which is proportionate with the number of revolutions of the engine; the signal for the "Check Engine" diagnosis warning light on the cluster **C10** leads from pin 8.

The control unit **S11** is connected with the air conditioning system through pins 48, 64 and 65.
This makes it possible to adapt the engine idle speed to the increased power each time the compressor cuts in, or to cut it out in the case of high speed or engine loads. For further details see the "Climate Control" section.

The control unit **S11** is connected by pin 88 with the ALFA ROMEO CODE control unit **N77** via the diagnosis line K; if the ALFA ROMEO CODE does not recognise a correct "key code" it will not enable the Motronic control unit to start the engine.

The control unit possesses a self-diagnosis system which can be used through connection to the ALFA ROMEO Tester at connector **T1**; the tester receives the fault signals from the control unit through the diagnosis lines L - pin 87 - and K - pin 88 -, while the earth leads from **G131** (line K is also used by the ALFA ROMEO CODE system).

ELECTRONIC CONTROL UNIT

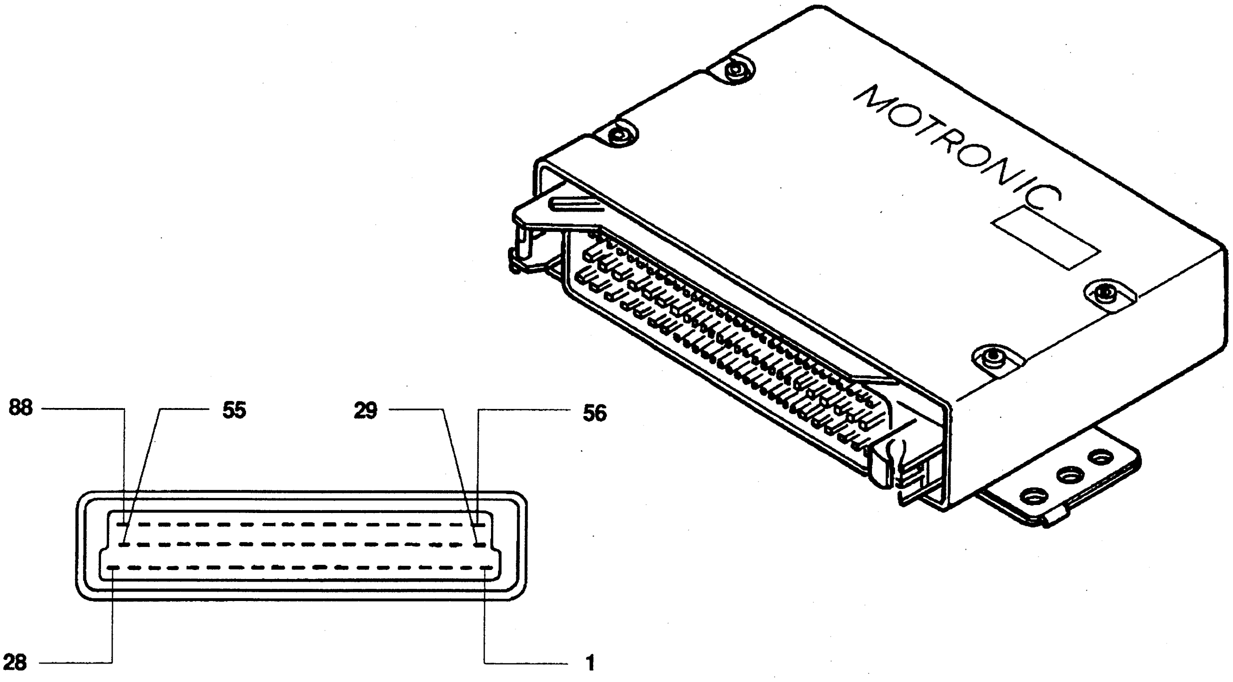

CONTROL UNIT PINOUT

1. Fuel pump relay consent
2. Idle actuator signal (open)
3. Injector control, cylinder no.1
4. Injector control, cylinder no.3
5. Injector control, cylinder no.5
6. Earth for final stages (injectors)
8. "Check Engine" warning light
9. E.G.R. solenoid valve control
11. Lambda sensor earth
12. Lambda sensor signal
14. Earth for air flow meter
16. Rpm sensor signal
23. Ignition cylinder no.3
24. Ignition cylinder no.2
25. Ignition cylinder no.1
26. Direct 12V supply
27. Main relay control
28. Electronic earth (sensor screening)
29. Idle speed actuator signal (closed)
31. Injector control, cylinder no.2
32. Injector control, cylinder no.4
33. Injector control, cylinder no.6
34. Earth for final stages
36. Evaporative solenoid valve signal
41. Air-flow meter signal
42. Car speed signal output
43. Rpm sensor signal
44. Camanglesensor signal
47. Engine rpm signal output
48. Climate control unit relay control
50. Ignition cylinder no. 6
51. Ignition cylinder no. 5
52. Ignition cylinder no. 4
54. Supply from main relay 12V
55. Earth for ignition
56. "Key-operated" supply
59. Reference voltage (5V) for throttle sensor
64. Climate control system signal (compressor cut in request)
65. Climate control system signal (system control)
69. Pinging sensor signal 2
70. Pinging sensor signal 1
71. Earth for pinging sensors
72. Electronic earth for sensors
73. Throttle angle sensor signal
77. Air temperature sensor signal
78. Water temperature sensor signal
87. Diagnosis, line L
88. Diagnosis, line K (also for ALFA ROMEO CODE system)

LOCATION OF COMPONENTS

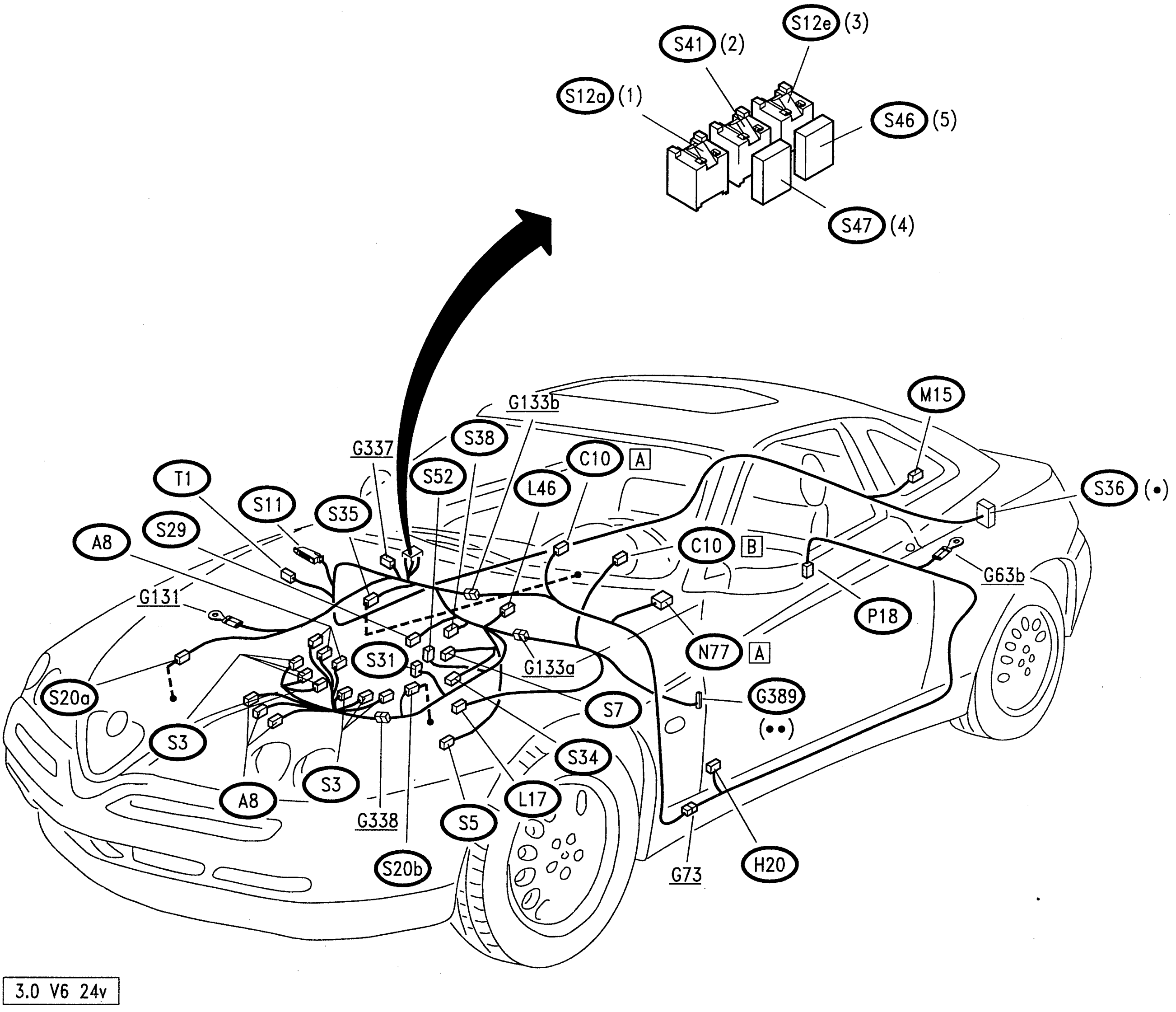

(•) Black fuse holder
(••) Red fuseholder
(1) Black base
(2) Grey base
(3) Black base
(4) Blue fuseholder
(5) Violet fuseholder

CHECKING COMPONENTS

Rpm sensor (S31)

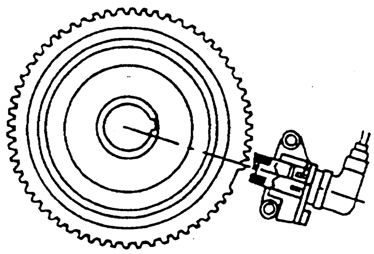

SPECIFICATIONS	
Sensor winding resistance 20 °C	~ 540 Ω
Distance (gap) between sensor and phonic wheel	0.8 ÷ 1.5 mm

Engine temperature sensor (S7)

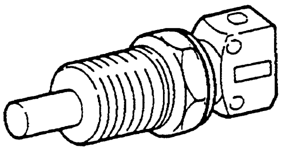

SPECIFICATIONS	
Temperature (°C)	Resistance (Ω)
- 10°C	8100 ÷ 10770 Ω
+ 20°C	2280 ÷ 2720 Ω
+ 80°C	292 ÷ 362 Ω

Intake air temperature sensor (S34)

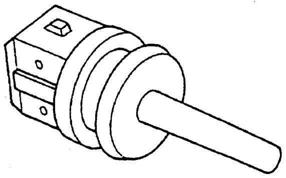

SPECIFICATIONS	
Temperature (°C)	Resistance (Ω)
- 10°C	8100 ÷ 10770 Ω
+ 20°C	2280 ÷ 2720 Ω
+ 80°C	292 ÷ 362 Ω

Air flow meter (S5)

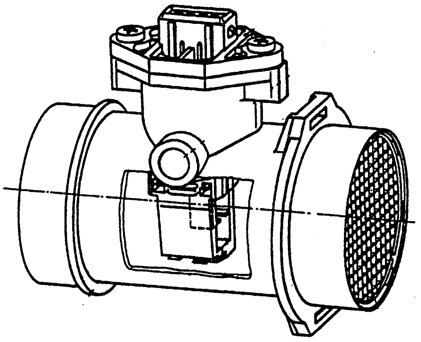

SPECIFICATIONS	
Current that crosses the diaphragm:	
capacity (kg/h)	current (A)
0 640	≤ 0.25 ≤ 0.80

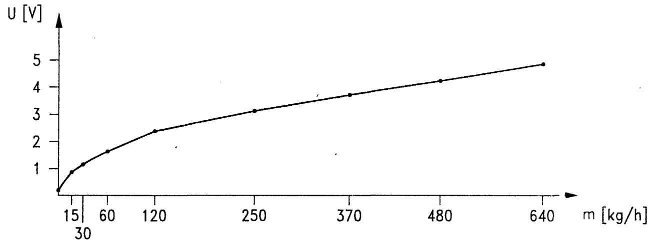

Sensor characteristic curve
m = capacity
U = voltage between pin 4 and 2

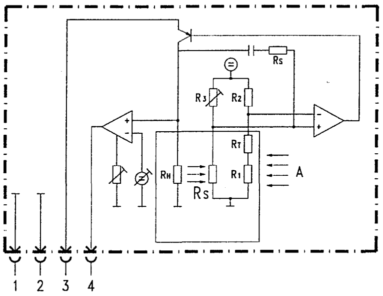

pin 1 - Earth
pin 2 - Reference earth
pin 3 - 12 V supply
pin 4 - Measurement signal
A = air
Rs = hot film sensor

Throttle position sensor (S38)

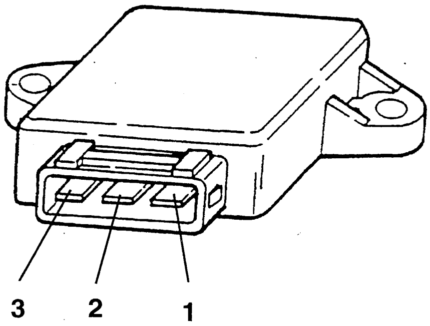

SPECIFICATIONS	
Resistance between terminals:	
1 - 2 (fixed)	~ 2 kΩ
1 - 3 (throttle closed)	~ 1 kΩ
1 - 3 (throttle completely open)	~ 2.7 kΩ

Cam angle sensor (S52)

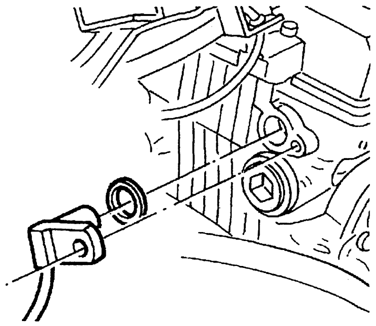

SPECIFICATIONS
The voltage signal "lowers" abruptly when the tooth machined on the camshaft passes in front of the sensor: 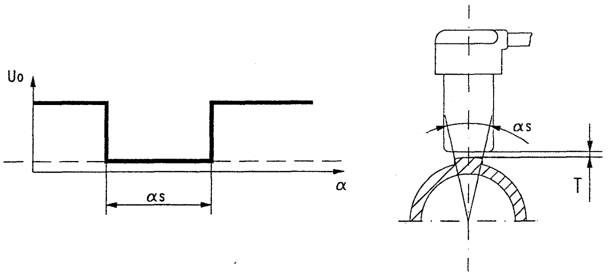
Gap value T ≤ 1.5 mm

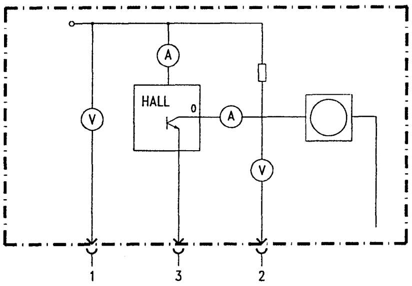

pin 1 - Supply
pin 2 - Signal output
pin 3 - Earth

Lambda sensor (S35)

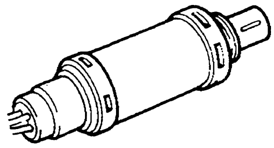

SPECIFICATIONS	
Heating resistance	3 Ω

Injectors (S3)

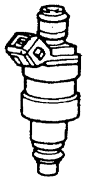

SPECIFICATIONS	
Winding resistance	appr. 6 Ω

Fuel pump (P18)

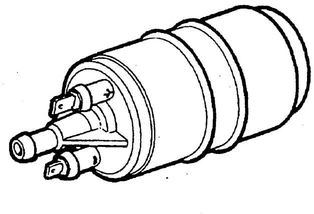

SPECIFICATIONS	
Capacity	≥120 l/h
Pressure	4 bar
Nominal voltage	12V

Idle adjustment actuator (S29)

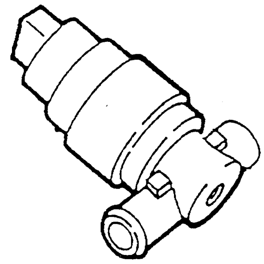

SPECIFICATIONS	
Resistance between terminals:	
1 - 3	~ 26 Ω
1 - 2	~ 13 Ω
2 - 3	~ 13 Ω

Ignition coils (A8)

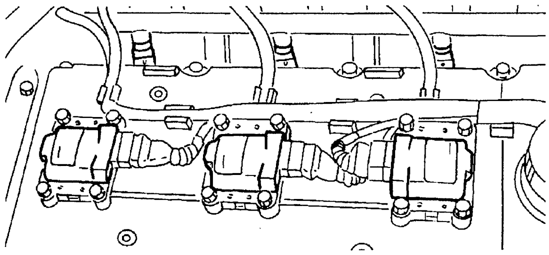

SPECIFICATIONS	
Primary resistance	- Ω
Secondary resistancesecondario	- kΩ

Evaporative solenoid valve (M15)

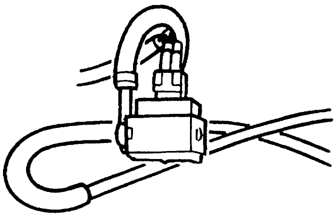

SPECIFICATIONS	
Duty-cycle signal	12 V; 10 Hz
Winding ohmic resistance	26 ± 4 Ω
When not energised the solenoid valve is normally closed	

Inertial switch (H20)

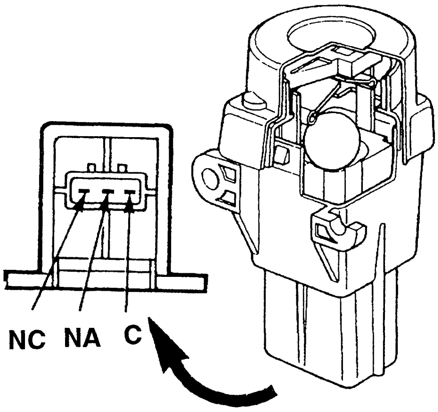

SPECIFICATIONS
Check continuity between pin NC and C: this continuity is interrupted in the event of a crash; the contact is closed again pressing the special button

E.G.R. solenoid valve (L46)

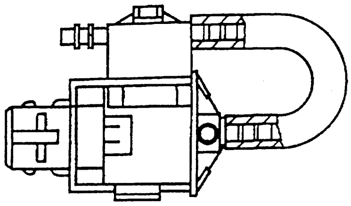

SPECIFICATIONS	
Duty Cycle signal	12V; 15.3 Hz
Winding ohmic resistance	~ 30 Ω

Pinging sensor (S20a) (S20b)

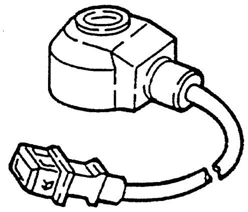

SPECIFICATIONS		
Resonance frequency		> 20 kHz
Impedence		≥ 1 MΩ
Allowed vibration	for long times	≤ 80 g
	for short times	≤ 400 g

FAULT-FINDING

The control unit possesses a self-diagnosis function which continuously checks the signals from the various sensors for plausibility and comparing them with the permissible limits: if these limits are exceeded, the system detects a fault and memorises it. It also turns on the special warning light on the instrument cluster.
For certain parameters the control unit replaces the abnormal values with appropriate mean values so that the car can "limp" to a point of the Service Network. These values, known as "recovery" depend on the other correct signals and are defined individually by the control unit operating logic.
The self-diagnosis system also enables quick and effective location of faults connecting with the ALFA ROMEO Tester, through which the errors memorised may be "read". It is also possible to check the operating parameters recorded by the control unit and engage the single actuators to check whether they are working properly.

Diagnosis using the ALFA TESTER

N.B. Before carrying out diagnosis with the Tester, carry out the perliminary test described below (**TEST A**).

The Tester and electronic control unit should be connected as follows:

1. Power the Tester either through the cigar lighter socket or connecting it directly to the battery using the special cable.
2. Connect the socket of the Tester to the one for the control unit (to be found next to the control unit).

The information the instrument can provide is:

- display of parameters;
- display of errors;
- active diagnosis.

Error clearing

Before ending diagnosis the contents of the "permanent" memory are cancelled through the Tester.

PRELIMINARY CHECK OF BOSCH M3.7.1 SYSTEM — PROVA A

NOTE: Beforehand check that the ALFA ROMEO CODE system is working properly as it may have cut off the supply to the system!

TEST PROCEDURE		RESULT	CORRECTIVE ACTION
A1	CHECK FUSE	OK ▶	Carry out **step A2**
	– Check the intactness of fuses **S36, S46, S47** and **G389**	~~OK~~ ▶	Replace fuses **S36**: 40A **S46**: 7.5A **S47** : 15A **G389** : 10A
A2	CHECK VOLTAGE	OK ▶	Carry out **step A3**
	– Check for 12 V at pin 30 of relays **S41** and **S12a** and also at pin 86 of **S41**	~~OK~~ ▶	Restore the wiring between the battery **A1** and relays **S41** and **S12a** through fuse **S47**
A3	CHECK VOLTAGE	OK ▶	Carry out **step A4**
	– With the key turned, check for 12 V at pin 56 of the control unit **S11**	~~OK~~ ▶	Restore the wiring between the ignition switch **B1** and the control unit **S11** through fuse **G389** and connector **G133a**
A4	CHECK RELAYS	OK ▶	Carry out **step A5**
	– Check that relays **S41**, **S12e** and **S12a** are working properly	~~OK~~ ▶	Replace any faulty relays
A5	CHECK CONTROL UNIT SUPPLY	OK ▶	Carry out **step A6**
	– Check for 12 V at pin 26 of the control unit **S11**; with the key turned 12 V also at pin 54 and 56 of **S11** and appr. 0 V (very low voltage) at pin 1 and 27 of **S11**	~~OK~~ ▶	Restore the wiring between the control unit **S11** and the relays and between the control unit and fuse **S46**
A6	CHECK EARTH	OK ▶	CONTINUE DIAGNOSIS USING THE ALFA ROMEO TESTER
	– Check for an earth at pin 6 and 34, 55 e 28. Also check for an earth at pin 85 of **S12e**	~~OK~~ ▶	Restore the wiring between **S11** and the relays and earth **G131**

KEY TO COMPONENTS

A STARTING - RECHARGING

A1	Battery
A3	Alternator, with integrated voltage regulator
A8	Ignition coil
A8a	Ignition coil A
A8b	Ignition coil B
A11	Starter motor
A12	Spark plugs

B MANUAL ELECTRICAL CONTROLS

B1	Ignition switch
B9	Heated rearscreen control switch
B10	Fog lights control switch
B11	Rear fog guards control switch
B12	Hazard warning lights control switch
B16	Instrument panel light dimmer button
B21a	Right front power window control switch (on RH door)
B21b	Right front power window control switch (on LH door)
B36	Wing mirror control switch
B40	Trip meter reset switch
B47	Sun roof motor control switch
B53	Front power window switch with automatic mechanism
B61	Fuel flap opening switch
B68	Steering column lever unit
B69	Headlamp aiming device
B87	Luggage compartment opening switch with glove box light
B98	Air recirculation switch

C INSTRUMENTATION

C10	Instrument cluster
C18	Auxiliary instrument cluster

D WARNING LIGHTS

D31	Anti-theft device led indicator

E EXTERIOR LIGHTS

E1a	LH front direction indicator bulb
E1b	RH front direction indicator bulb
E2a	LH front side light bulb
E2b	RH front side light bulb
E5a	LH low beam light bulb
E5b	RH low beam light bulb
E7a	LH high beam light bulb
E7b	RH low beam light bulb
E9a	LH direction indicator light bulb
E9b	RH direction indicator light bulb
E10a	LH fog light bulb
E10b	RH fog light bulb
E17a	LH number plate light bulb
E17b	RH number plate light bulb
E19	RH tail light cluster
E20	LH tail light cluster
E28	Third stop light
E30	Rear RH fog guard/reversing light
E31	Rear LH fog guard/reversing light

F INTERIOR LIGHTS

F3	Passenger compartment ceiling light
F5	Luggage compartment light
F8a	Heating/ventilation controls light bulb a
F8b	Heating ventilation controls light bulb b
F23	RH foot well light
F24	LH foot well light
F45	Light on LH front door
F46	Light on RH front door

G FUSEBOX - CONNECTORS - EARTHS

G1	Fusebox
G3	Fusebox terminal connector
G4	Free fuse
G21	Connector for RH front door wiring
G23	Connector for LH front door wiring
G43	Connector for heating and ventilation control wiring
G53a	RH engine compartment earth
G53b	LH engine compartment earth
G55b	LH side panel earth
G56	Branch terminal board
G63a	RH rear earth
G63b	LH rear earth
G65	Coaxial cable for aerial
G73	Connector for rear services
G73b	Connector for rear services
G84	Console wiring connector
G92	Luggage compartment earth
G99	Connector for dashboard wiring/engine wiring
G115	Connector for tow bar trailer socket
G124	ABS system connector
G125a	ABS system fuse
G125b	ABS system fuse
G131	Earth on upper cover
G133a	Connector for electronic injection wiring A
G133b	Connector for electronic injection wiring B
G148b	Earth under dashboard LH
G193	Connector for electric aerial wiring
G202	Connector for ABS system earth
G219	Connector for sun roof
G254	Fuse for engine fan
G261	Fuse for sun roof
G272	Connector for ABS hydraulic unit
G273	ABS control unit connector
G308	Connector for engine sensors
G310	Fuse for RH front power window
G311	Fuse for LH front power window
G313	Connector for additional conditioner wiring
G314a	Connector for engine wiring / conditioner wiring A
G314b	Connector for engine wiring / conditioner wiring B
G320	Connector for rear loudspeaker cables
G337	Connector for conditioner syst./injection syst.
G338	Connector ignition elettroinjectors
G380	Airbag connector
G380a	Airbag connector
G381	Earth for airbag
G383	Connector for airbag capsule
G384	Services supply fuse

G385	Connector for wiring in front bumper
G389	Fuse for ALFA ROMEO CODE unit
G391	Rear fog guard fuse

H	**SWITCHES**
H1	Handbrake switch
H2	Reversing light switch
H3	Stop lights switch
H9	RH front brake pad switch
H10	LH front brake pad switch
H17	Brake fluid minimum level switch
H20	Inertial switch
H24	Luggage compartment light switch
H44	Bonnet anti-theft device switch
H51	Sun roof stroke limit switch

I	**RELAYS**
I2	Heated rearscreen relay
I3	Horn relay
I17	Fog light relay
I26	Ceiling light relay
I29	Fuel pump relay
I35	Key-operated supply relay
I49	Low beam relay
I50	High beam relay
I52	Luggage compartment opening relay
I53	Fuel flap opening relay
I58	Sun roof relay
I64	Side lights relay
I99	Engine cooling fan 1st speed relay
I99a	Engine cooling fan 1st speed relay
I99b	Engine cooling fan 1st speed relay
I100	Engine cooling fan 2nd speed relay
I108	Key-operated supply cutoff relay
I109	Anti-theft switch relay

L	**SENDERS**
L2	Minimum engine oil pressure
L9	Sender for fuel level gauge
L10	Sender for engine coolant temperature gauge and max. temperature warning light contact
L17	Speedometer sensor
L28	RH front phonic wheel inductive sensor
L29	LH front phonic wheel inductive sensor
L30	RH rear phonic wheel inductive sensor
L31	LH rear phonic wheel inductive sensor
L33	Two-level thermal contact
L46	E.G.R. solenoid valve

M	**ELETTROMAGNETS - SOLENOID VALVES**
M12	Luggage compartment opening actuator electromagnet
M13	Fuel flap opening actuator electromagnet
M15	Evaporation solenoid valve

N	**ELECTRONIC DEVICES - INTERMITTENCES- TIMERS**
N11	Door locking control unit
N13	Hazard warning lights and direction indicators intermittence
N14	Electronic windscreen wiper intermittence
N18	Electronic headlamp switching device
N25	Rear fog guard electronic device
N38	Power window control unit
N45	Anti-theft device control unit
N51	Hydraulic unit with ABS control unit
N53	Anti-disturbance condenser on luggage compartment light
N60	Sun roof control unit
N67	Remote control signal receiver
N77	ALFA ROMEO CODE control unit
N78	ALFA ROMEO CODE receiver
N79	Car radio supply antidisturbance condenser

O	**SERVICES**
O1	Heated rearscreen
O2a	High tone horn
O2b	Low tone horn
O3	Aerial
O4	Car radio
O5a	RH front loud-speaker
O5b	LH front loud-speaker
O5c	RH rear loud-speaker
O5d	LH rear loud-speaker
O6	Cigar lighter - current socket
O18	RH wing mirror defroster
O19	LH wing mirror defroster
O22a	Additional engine fan resistance
O22a	Additional engine fan resistance
O31a	RH Tweeter loud-speaker
O31b	LH Tweeter loud-speaker

P	**ELECTRIC MOTORS**
P2	Engine cooling fan
P2a	Engine cooling fan
P2b	Engine cooling fan
P8	LH wing mirror motor
P9	RH wing mirror motor
P10	Front RH door lock motor
P11	Front LH door lock motor
P14	Front RH power window motor
P15	Front LH power window motor
P18	Electric fuel pump
P19	Windscreen and rearscreen washer pump
P24	Sun roof motor
P27	Windscreen wiper motor with control unit
P35a	RH headlamp aiming motor
P35b	LH headlamp aiming motor

Q	**HEATING/VENTILATION - AIR CONDITIONING**
Q1	Heater fan
Q4	Heater fan control
Q5	Heater fan speed adjustment resistance
Q11	Compressor electromagnetic coupling
Q15	Heating and ventilation fan relay
Q20	Min. and max. sensor pressure contact (Trinary)
Q22	Electromagnetic coupling relay
Q27	Air recirculation flap control motor
Q32	Auxiliary relay for heating and ventilation
Q39	Fuse for conditioning system (30A)

Q42	Conditioner fan delay device
Q65	Fuse for conditioning system
Q68	Compressor and air recirculation engagement switches
Q69	Heater fan 1st speed relay
R	**SAFETY DEVICES**
R22	Airbag control unit
R23	Capsule on steering wheel for airbag
R27	Passenger's side airbag capsule
R28	Capsule on RH pretensioner
R29	Capsule on LH pretensioner
S	**ELECTRONIC INJECTION**
S3	Elettroinjectors
S5	Air flow meter
S7	Engine temperature sensor
S11	Motronic control unit
S12a	Motronic fuel pump relay
S12e	Air flow meter relay
S20a	Pinging sensor a
S20b	Pinging sensor b
S29	Idle adjustment actuator
S31	Rpm and crankshaft position sensor
S34	Air temperature sensor
S35	Heated lambda probe
S36	Fuse for injection relay
S38	Sensor on throttle body
S41	Main relay
S43	Absolute pressure sensor
S46	Fuse for Motronic supply
S47	Fuse for fuel pump
S52	Cam angle sensor
T	**DIAGNOSIS**
T1	Connector for ALFA TESTER (Motronic and ALFA ROMEO CODE)
T3	Connector for ALFA TESTER (airbag)
T7	Connector for ALFA TESTER (anti-theft device)
T8	Connector for ALFA TESTER (ABS)

COMPONENTS AND CONNECTORS

N.B. : here only the connectors which differ from the "Spider- Gtv" manual are given

.

Battery

A1

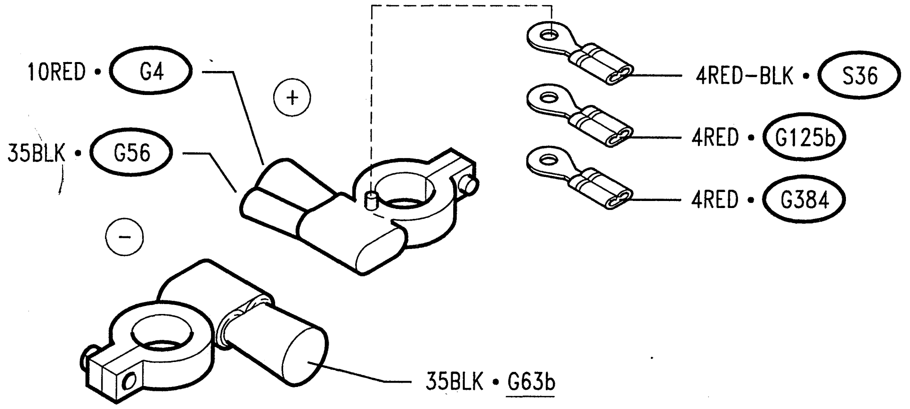

Ignition coil

A8

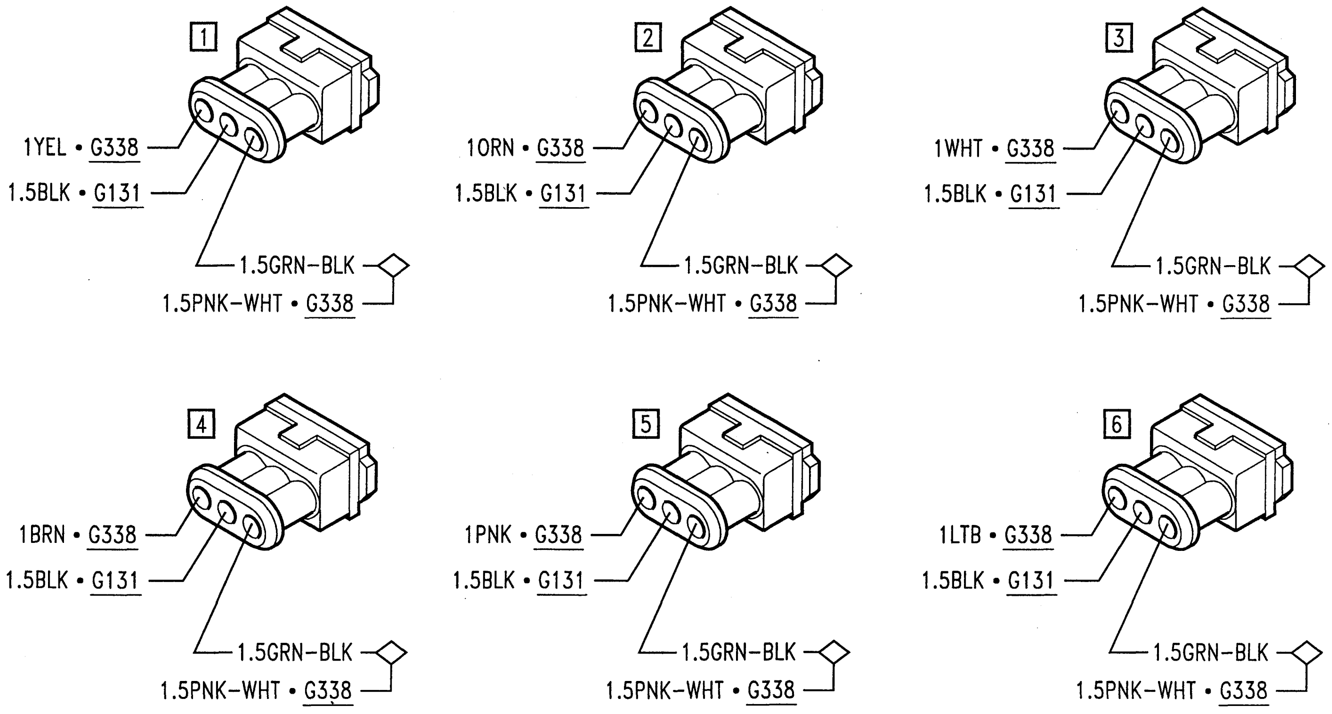

Auxiliary instrument cluster

C18

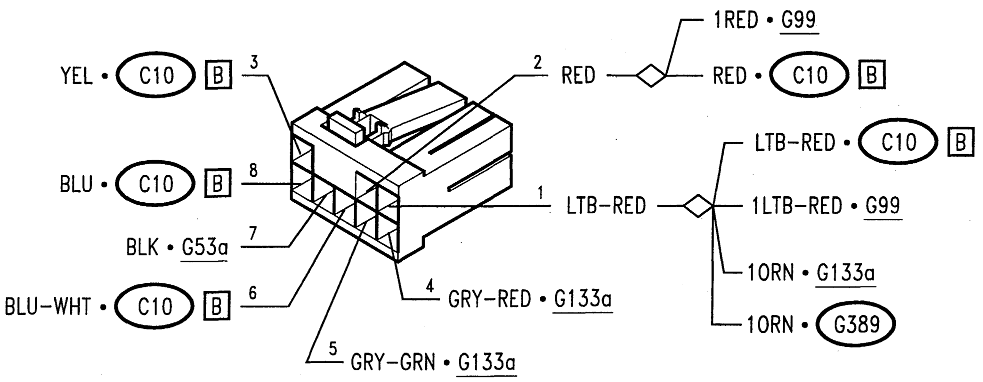

Fusebox	G1 A

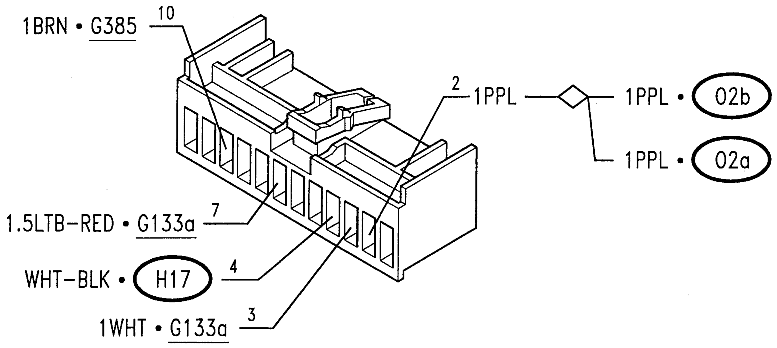

RH engine compartment earth	G53a

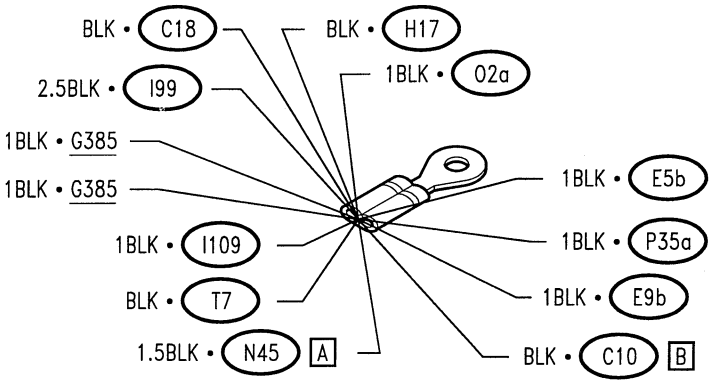

LH engine compartment earth	G53b

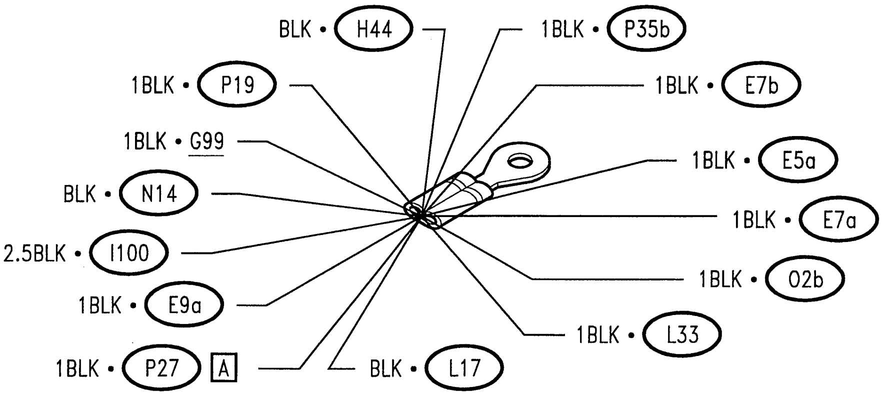

Branch terminal board	G56

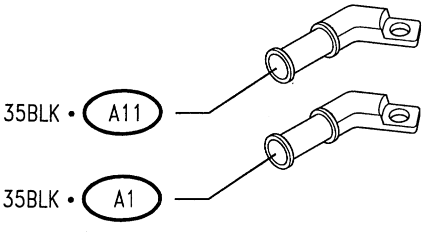

Connector for dashboard wiring/engine wiring **G99**

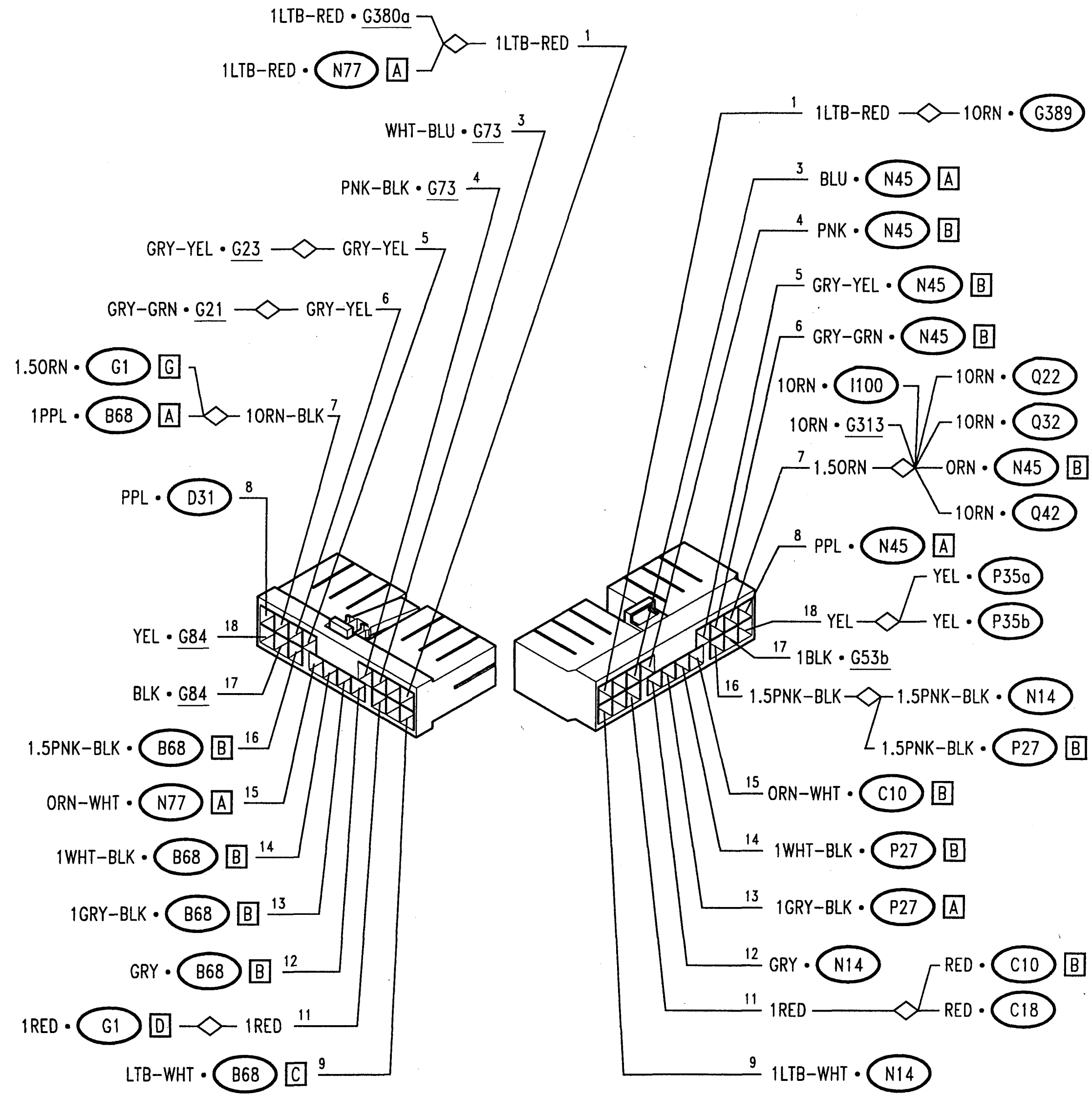

Earth on upper cover **G131**

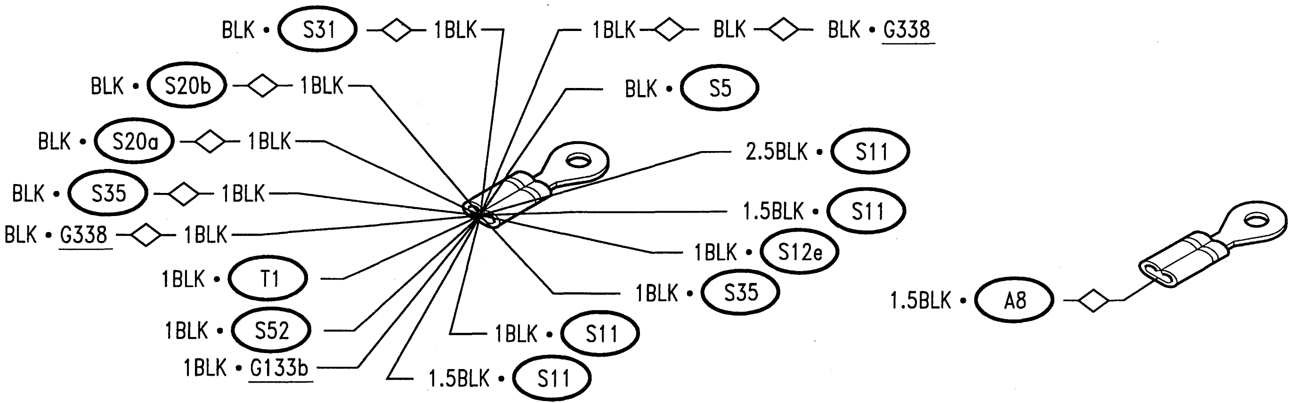

Connector for electronic injection wiring A

G133a

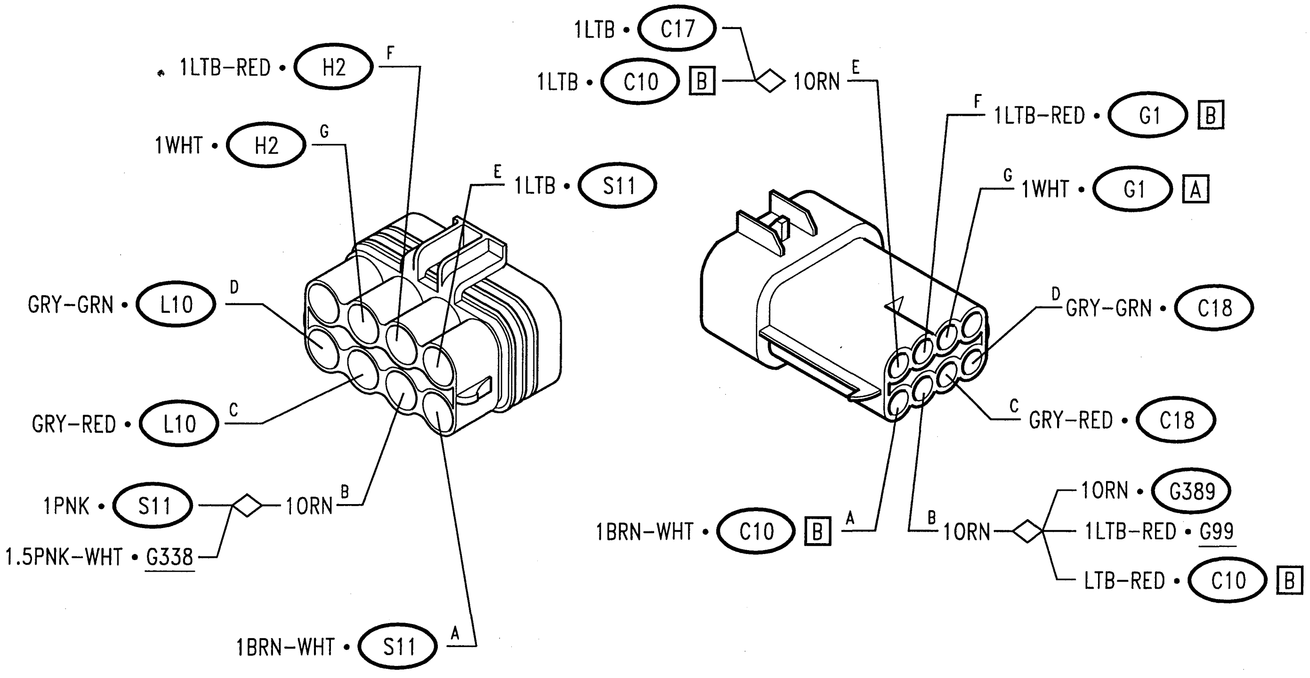

Connector for electronic injection wiring B

G133b

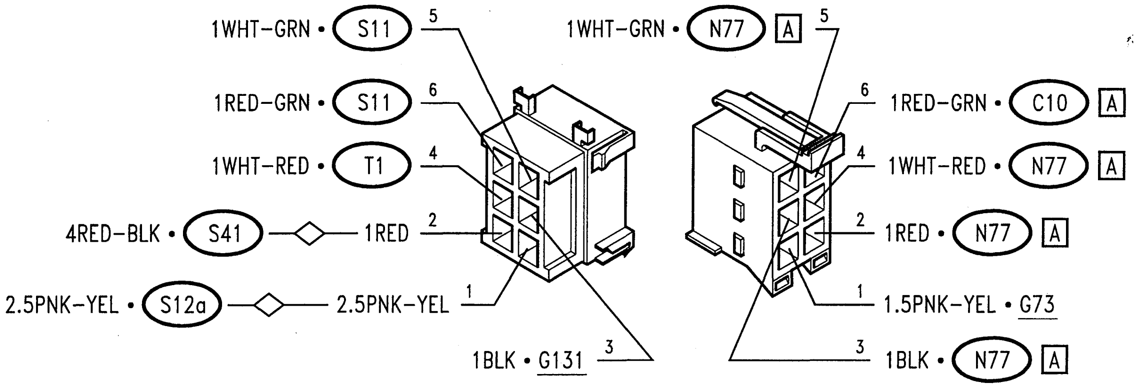

Fuse for engine fan

G254

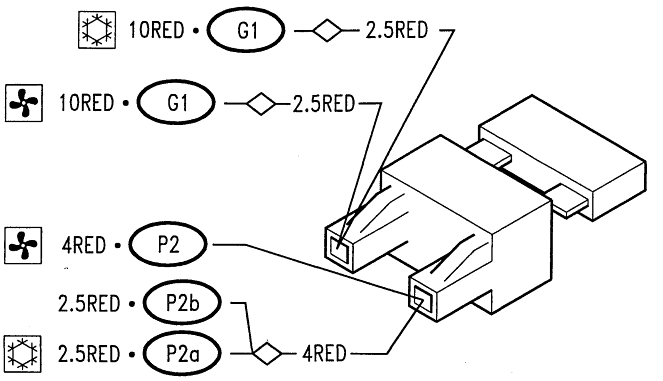

Connector for additional conditioner wiring

G313

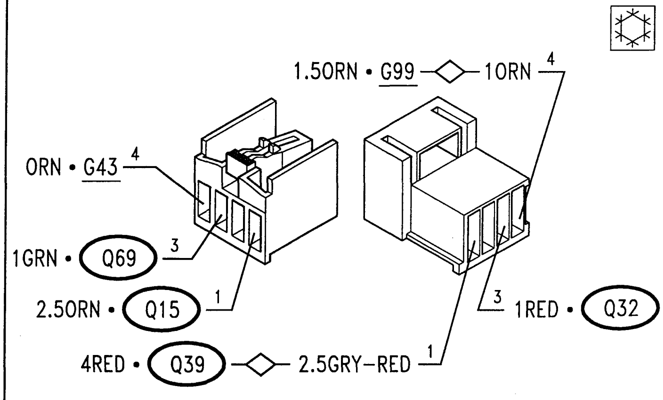

Connector for conditioner syst./injection syst. G337

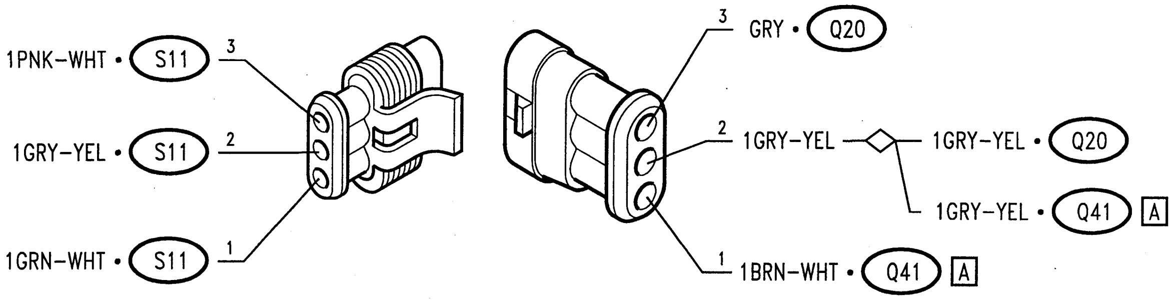

Connector ignition elettroinjectors G338

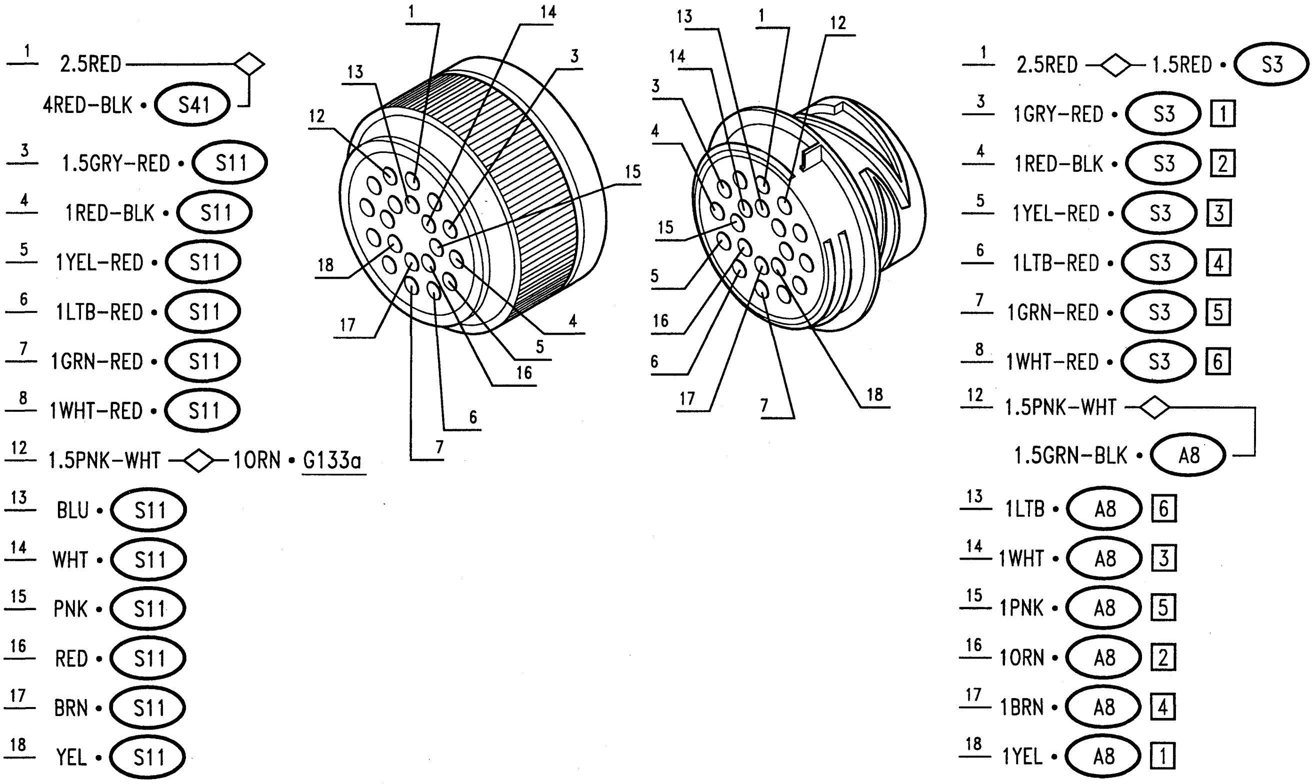

Reversing light switch H2

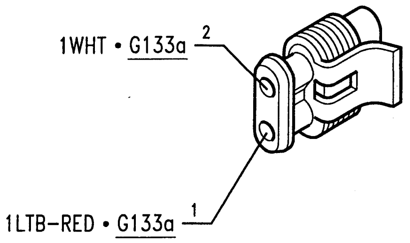

Engine cooling fan 1st speed relay I99

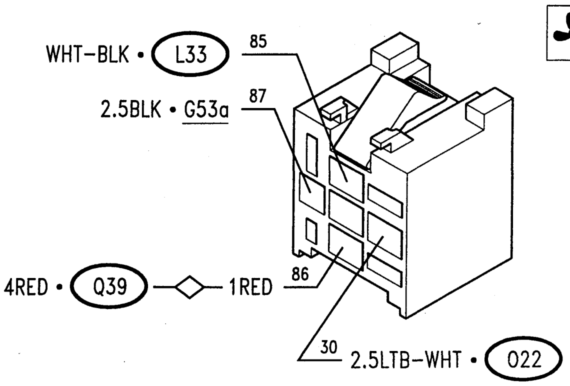

Engine cooling fan 1st speed relay

I99

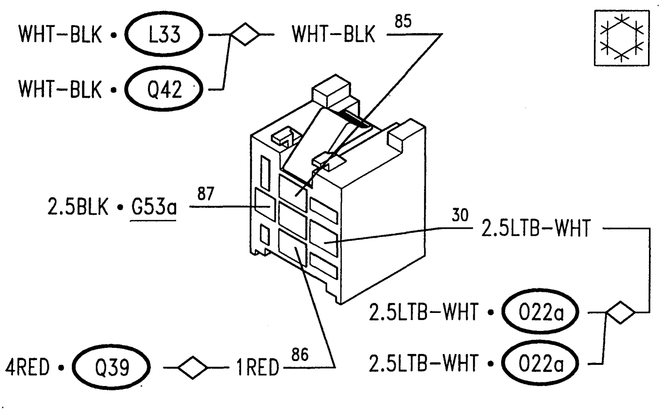

Engine cooling fan 2nd speed relay

I100

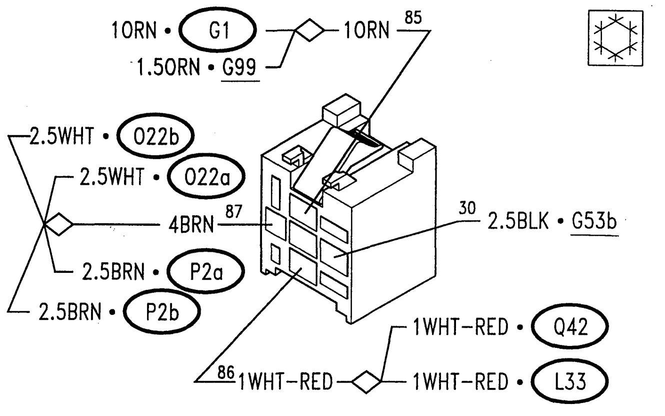

Engine cooling fan 2nd speed relay

I100

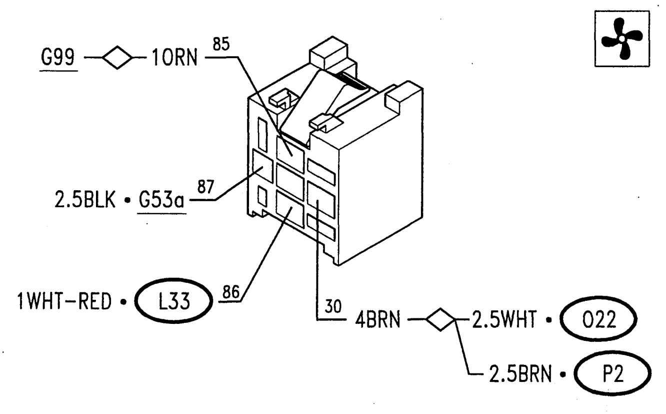

Sender for engine coolant temperature gauge and max. temperature warning light contact

L10

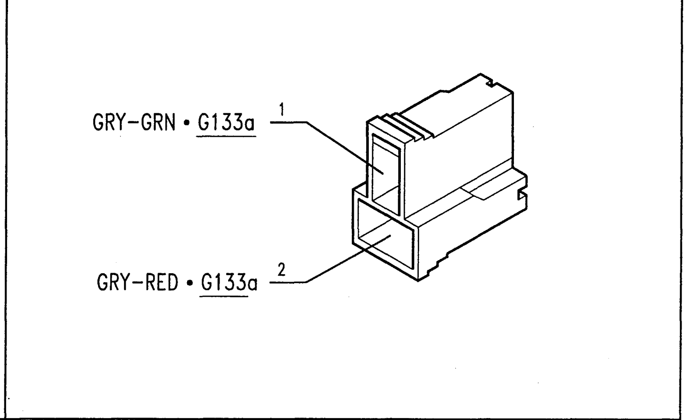

Two-level thermal contact

L33

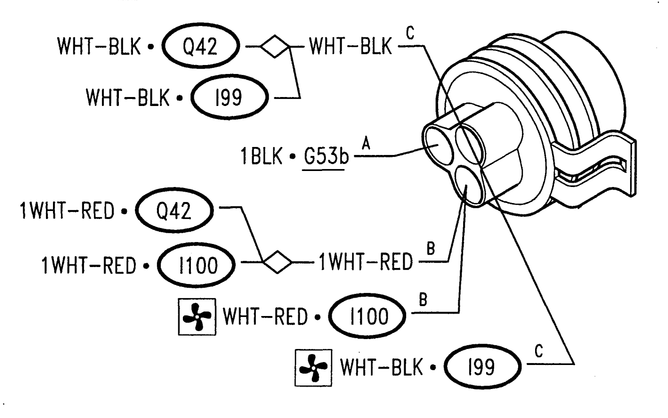

E.G.R. solenoid valve

L46

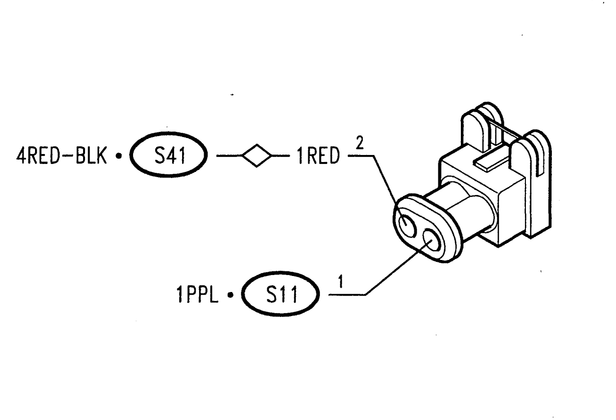

Evaporation solenoid valve

M15

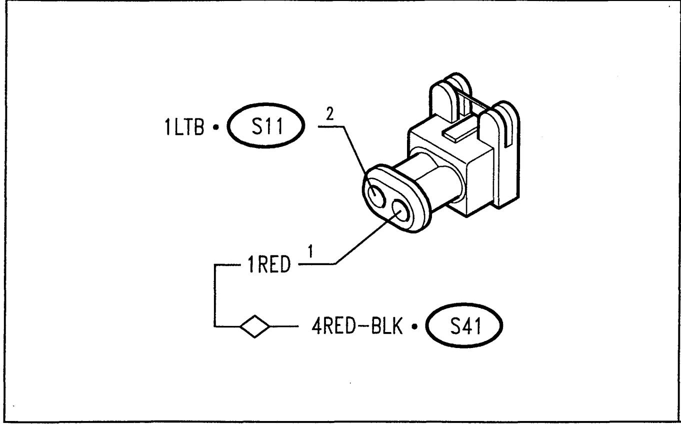

Additional engine fan resistance

O22a

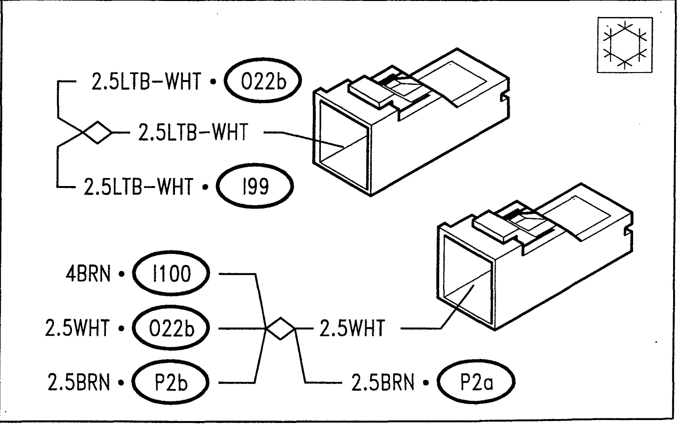

Additional engine fan resistance O22b

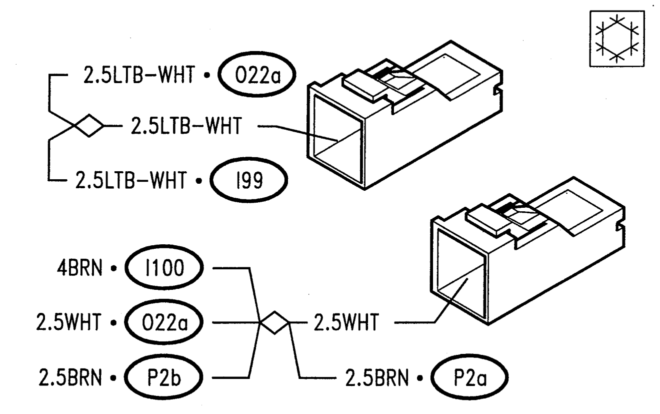

Additional engine fan resistance O22

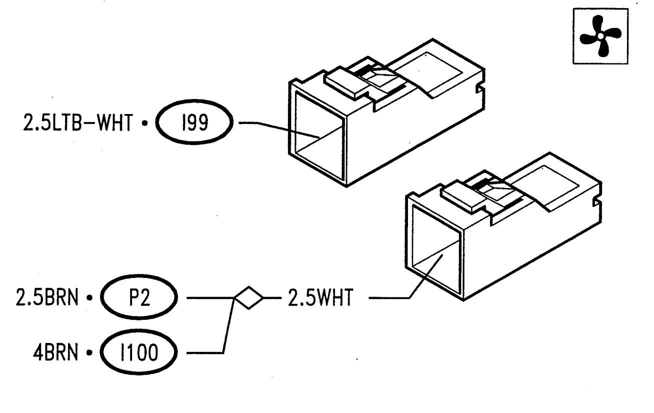

Engine cooling fan P2a

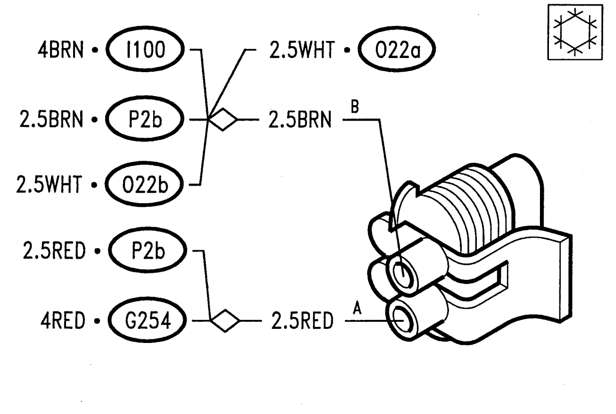

Engine cooling fan P2b

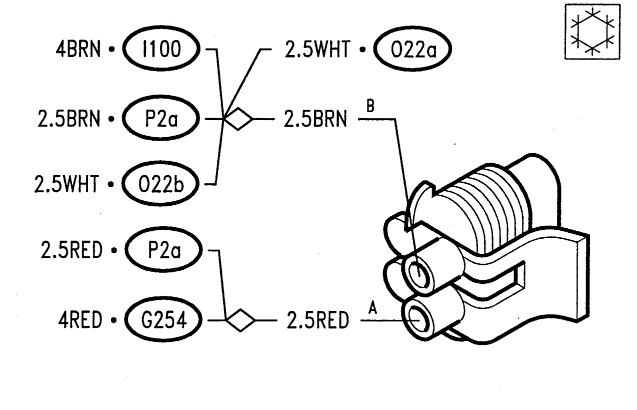

Engine cooling fan P2

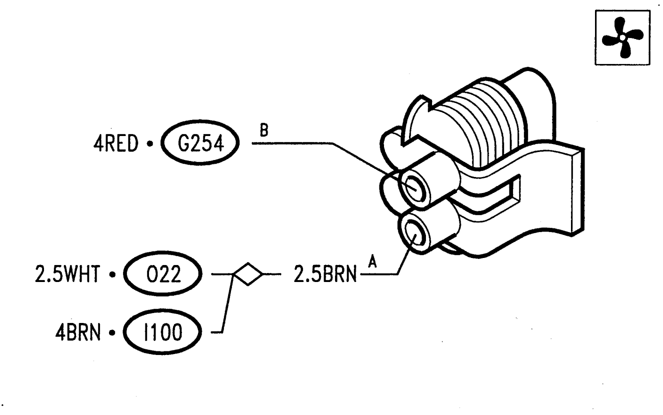

Compressor electromagnetic coupling Q11

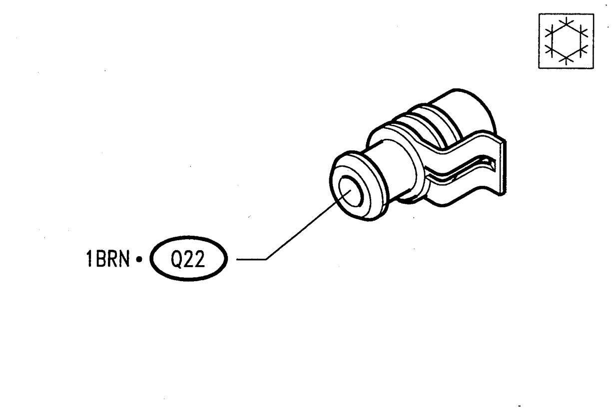

Min. and max. sensor pressure contact Q20

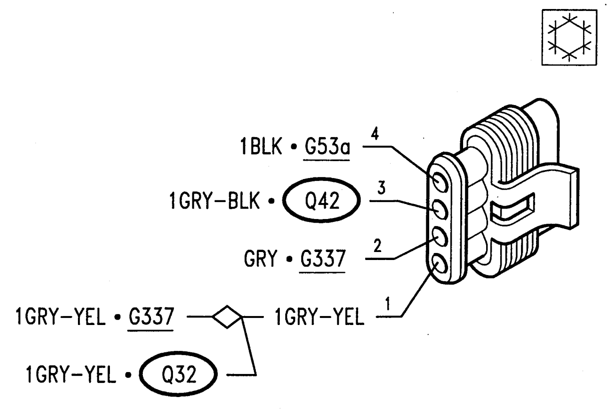

Electromagnetic coupling relay Q22

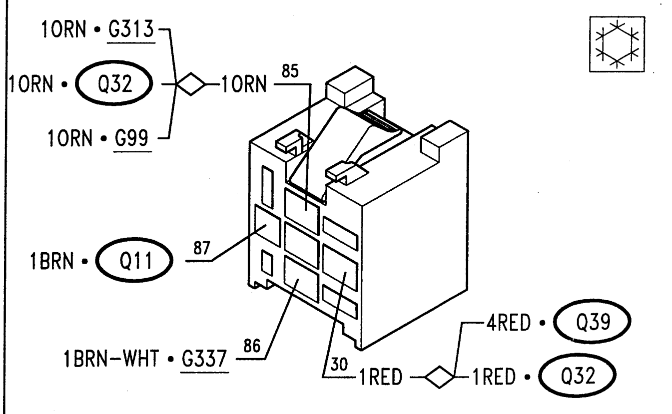

Auxiliary relay for heating and ventilation — Q32

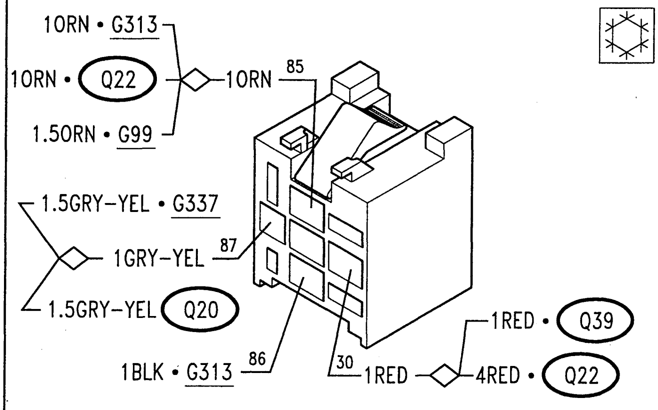

Fuse for conditioning system (30A) — Q39

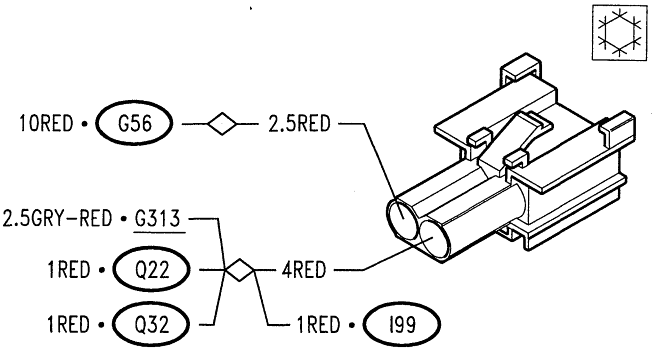

Conditioner fan delay device — Q42

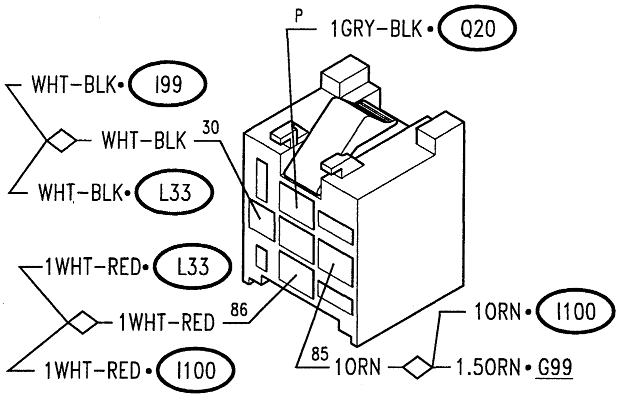

Elettroinjectors — S3

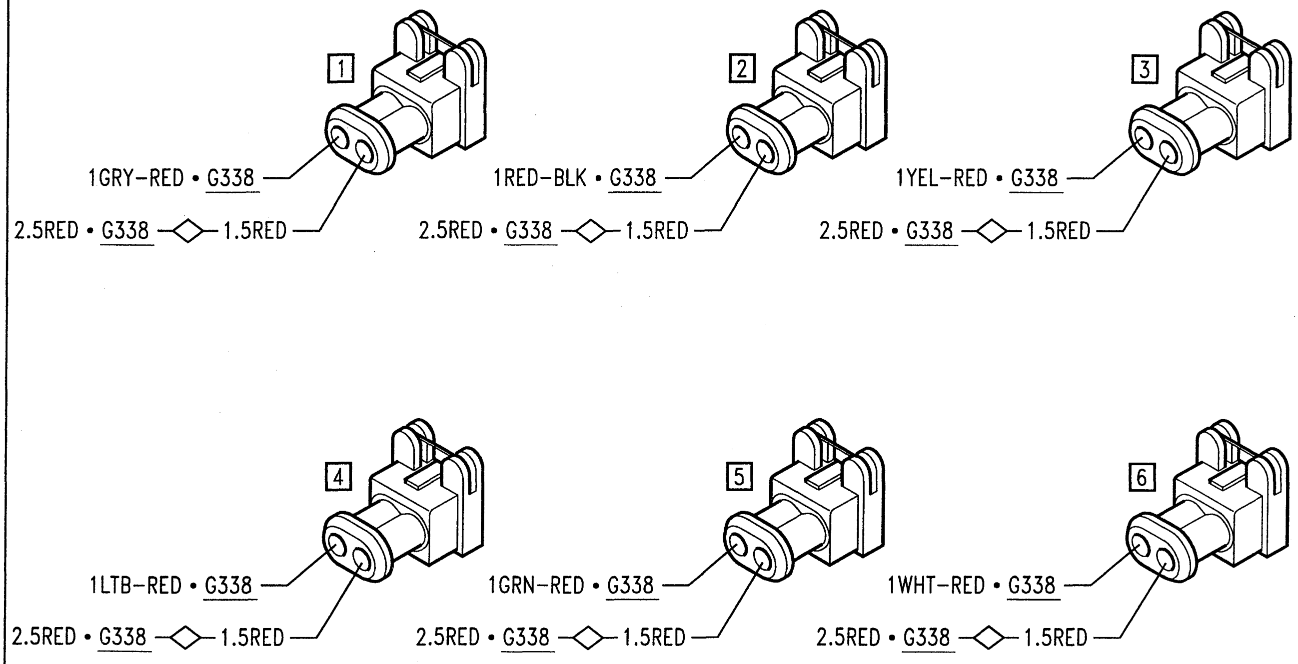

Air flow meter (S5)

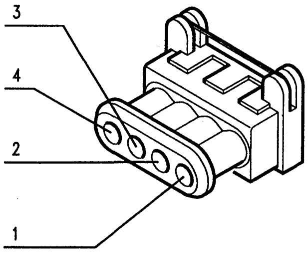

3	1ORN-WHT •	S12e
4	1WHT-BLK •	S11
2	1GRN •	S11
1	1BLK •	G131

Engine temperature sensor (S7)

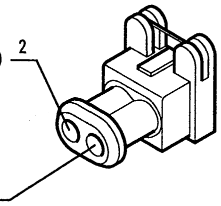

2	1BLU-GRN •	S11
1	1YEL ◇ 1YEL •	S11

Motronic control unit (S11)

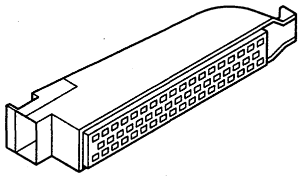

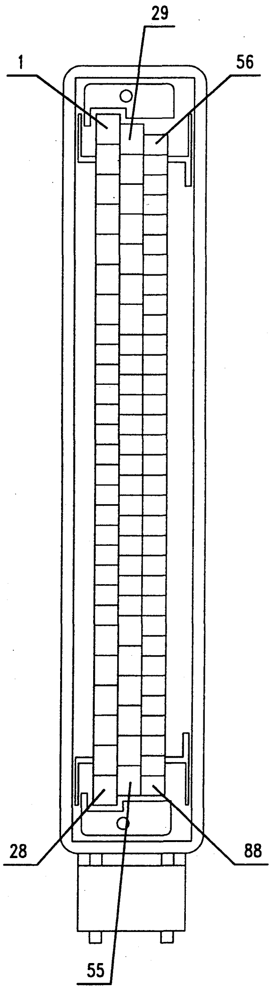

1	1RED-BLK •	S12a
2	1ORN-BLK •	S29
3	1.5GRY-RED •	G338
4	1YEL-RED •	G338
5	1GRN-RED •	G338
6	1.5BLK •	G131
8	1RED-GRN •	G133b
9	1GRY-RED •	L46
11	BLK •	S35
12	GRN •	S35
14	1GRN •	S5
16	BLK •	S31
23	WHT •	G338
24	RED •	G338
25	YEL •	G338
26	1RED •	S46
27	1PPL-BLK •	S41
28	1BLK •	G131
29	1LTB-BLK •	S29
31	1RED-BLK •	G338
32	1LTB-RED •	G338
33	1WHT-RED •	G338
34	1.5BLK •	G131
36	1LTB •	M15
41	1WHT-BLK •	S5
42	1LTB •	G133a
43	YEL •	S31
44	1WHT-BLU •	S52
47	1BRN-WHT •	G133a
48	1BRN •	G337
50	BLU •	G338
51	WHT •	G338
52	BRN •	G338
54	1GRY ◇ 4GRY •	S41
55	2.5BLK •	G131
56	1PNK ◇ 1ORN •	G133a
59	1PPL-WHT •	S38
64	1GRN-WHT •	G337
65	1GRY-YEL •	G337
69	YEL •	S20b
70	BLU-BLK •	S20a
71	BLU ◇ BLU • BLU •	S20a S20b
72	1YEL ◇ 1YEL • 1YEL • 1YEL •	S34 S7 S38
73	1WHT-BLK •	S38
77	1YEL-BLU •	S34
78	1BLU-GRN •	S7
87	1LTB-WHT •	T1
88	1WHT-GRN •	G133b

Motronic fuel pump relay — S12a

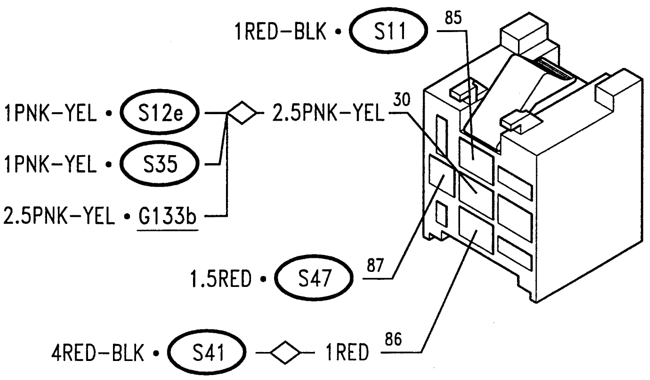

Air flow meter relay — S12e

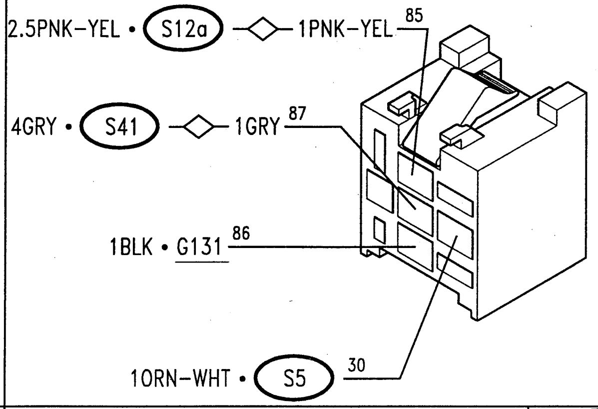

Pinging sensor a — S20a

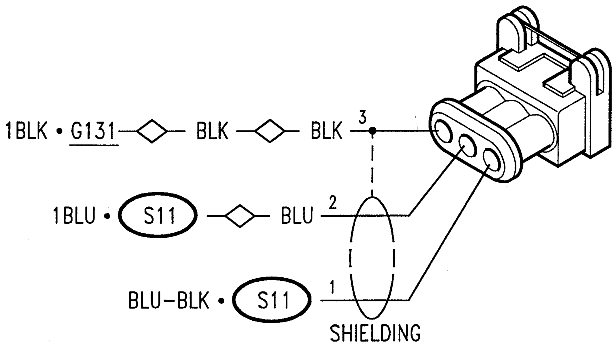

Pinging sensor b — S20b

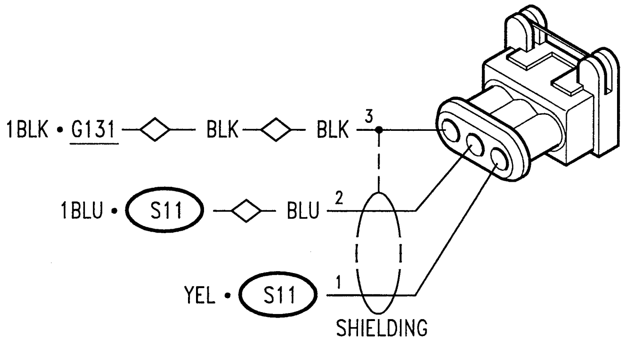

Idle adjustment actuator — S29

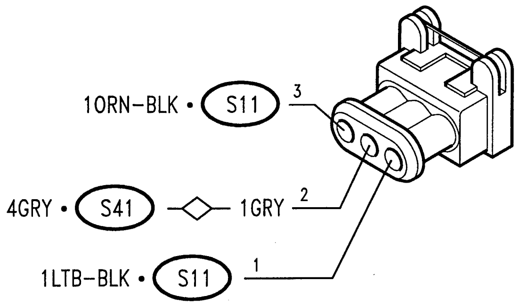

Rpm and crankshaft position sensor — S31

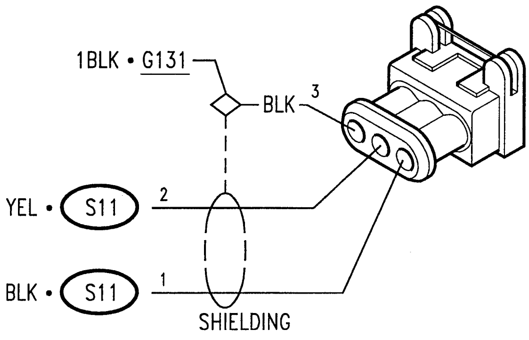

Air temperature sensor — S34

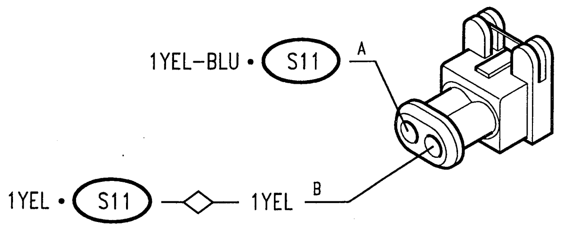

Heated lambda probe — S35

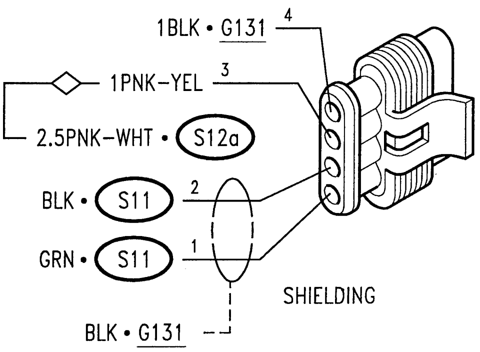

Fuse for injection relay

S36

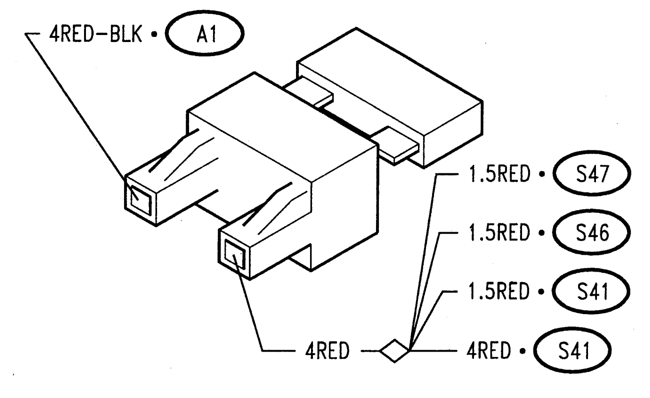

Sensor on throttle body

S38

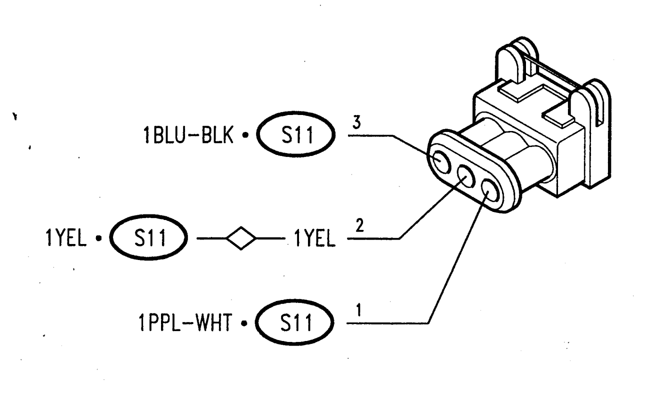

Main relay

S41

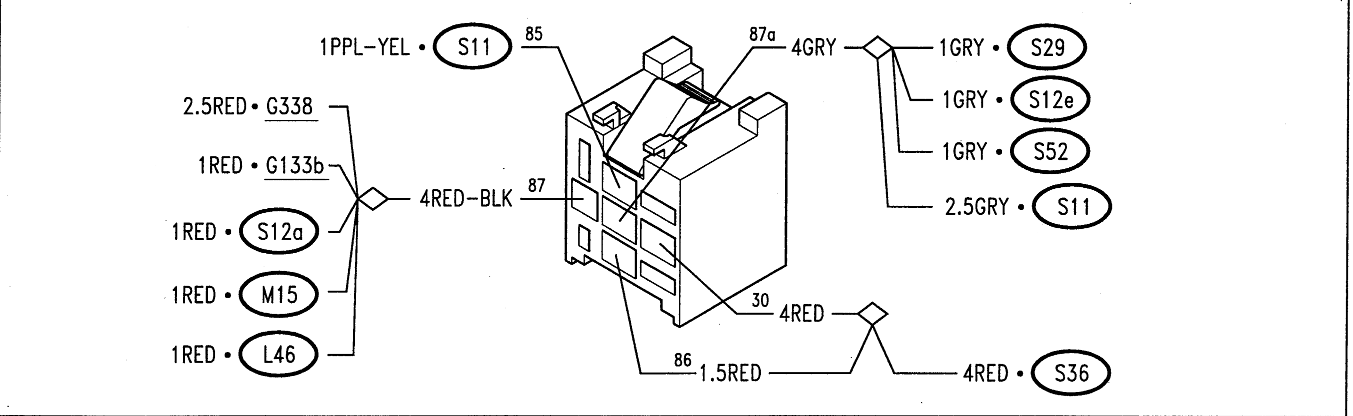

Fuse for Motronic supply

S46

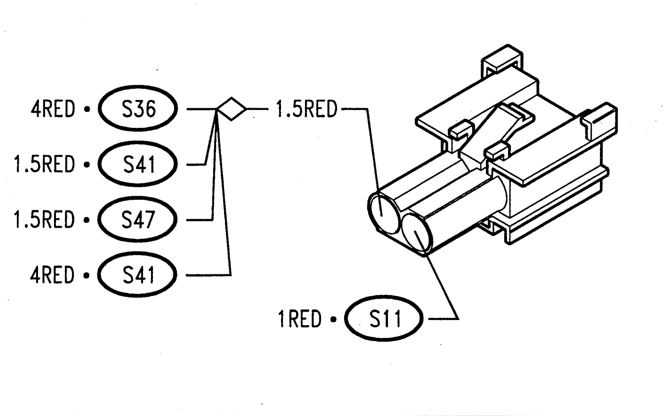

Fuse for fuel pump

S47

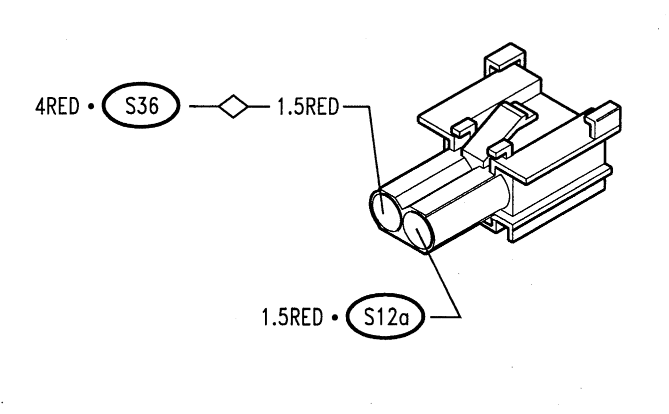

Cam angle sensor

S52

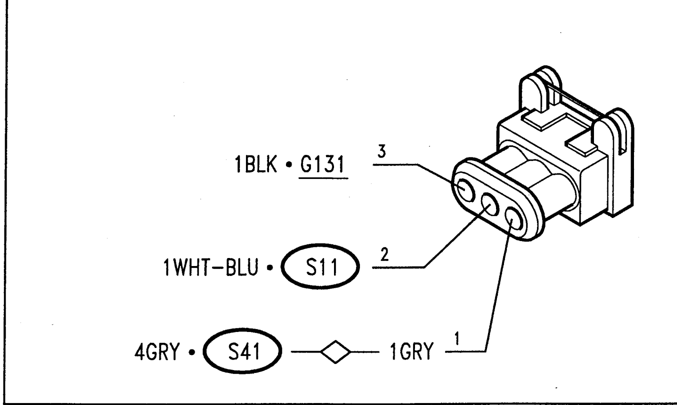

Connector for ALFA TESTER (Motronic and ALFA ROMEO CODE)

T1

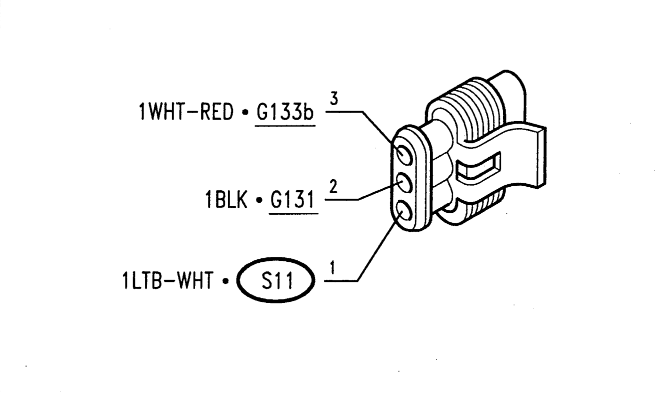

SERVICE

DIREZIONE POST-VENDITA
SERVIZI ASSISTENZIALI
Viale Alfa Romeo 20020 Arese (MI)
Fiat Auto S.p.A.

Publication PA497200000000 - 4 /95
Printed in Italy by Tip. Bogliani - Torino